RCA VICTOR

SERVICE MANUAL

VOLUME V

RADIO RECEIVERS
PHONOGRAPHS

RCA VICTOR COMPANY, LTD.
HOME INSTRUMENT SERVICE DIVISION, MONTREAL, CANADA

RCA VICTOR

"HIS MASTER'S VOICE"

SERVICE DATA

VOLUME V

- AC RECEIVERS
- AC-DC RECEIVERS
- AUTO RECEIVERS
- BATTERY PORTABLES
- BATTERY RECEIVERS
- CLOCK RADIOS
- CLOCK TIMERS
- RADIO-PHONOGRAPH COMBINATION
- RECORD CHANGERS
- RECORD PLAYERS

THIS VOLUME IS A COMPILATION OF SERVICE DATA PREVIOUSLY ISSUED FOR THE YEARS 1949-1952 (INCLUSIVE) WITH THE LATEST CHANGES AND CORRECTIONS.

PUBLISHED BY
HOME INSTRUMENT SERVICE DIVISION
RCA VICTOR COMPANY, LTD.
MONTREAL, CANADA

INDEX

1949 1952

Page

AC - RECEIVERS

7Q51 ---- 21
9Q53 ---- 31

AC - DC RECEIVERS

521D ---- 237
531D ---- 239
531F ---- 239
533D ---- 243
533F ---- 243
X600 ---- 261
X602 ---- 263
702X ---- 273
Little Master IV ---- 303
Master X ---- 305
Nipper ---- 311
Nipper II ---- 307
Nipper II (Wood) ---- 309

AUTO RECEIVERS

A-550 ---- 247
A-550X ---- 247
A-552 ---- 251
A-552X ---- 255
A-558 ---- 257
A-558X ---- 259
A-752 ---- 277
A-754 ---- 279

BATTERY PORTABLES

BP5C ---- 1
BP5D ---- 5
BP6D ---- 9
BP6X ---- 13
BP6DX ---- 17
BX57 ---- 87
BP61 ---- 95
BP61X ---- 99
BP400 ---- 197
BP401 ---- 199
BP402 ---- 203
BP500 ---- 217

BATTERY RECEIVERS

BT46 ---- 83
BT48 ---- 85
BT502 ---- 225
BT504 ---- 227

CLOCK RADIOS

Chanticleer ---- 299
C-501 ---- 221

Page

CLOCK TIMER MECHANISM

C-57 (Chanticleer) ---- 91

RADIO-PHONOGRAPH COMBINATION

4QV8C ---- 283
9Y5 ---- 27
9Y5S ---- 27
9W63 ---- 35
9W65 ---- 39
9W75 ---- 41
9W91 ---- 45
9W93 ---- 49
9W95 ---- 51
9W125 ---- 55
9W501 ---- 63
9W653 ---- 67
VRA85 ---- 103
V305 ---- 167
V306 ---- 171
V307 ---- 175
V309 ---- 179
V310 ---- 183
V312 ---- 189
V405 ---- 205
V405A ---- 208
V406 ---- 209
V408 ---- 213
V416 ---- 209
V506 ---- 229
V507 ---- 233
V607 ---- 265
V610 ---- 269
V800 ---- 281

RECORD CHANGERS

RP168 (2nd Issue) ---- 107
RP190 ---- 123
RP200 ---- 135
RP201 ---- 151
124196 ---- 287

RECORD PLAYERS

9JY ---- 25
9EY3 ---- 25
15E ---- 71
VA45 ---- 75
45E ---- 77
45J2 ---- 79
45EY3 ---- 81

SUPPLEMENTARY INFORMATION

RADIOS

BP5C

Eveready W167 Battery should read—"Eveready #755".

In Replacement Parts List—Voltage Divider Resistor should read—R-18 instead of R-20, while R-20 should be R-18.

BP5D

Add to Parts List:

S-6008 — Cabinet Back.

BP6D

Correction:

RCA VS010 Battery shoud read—Eveready #753.

S-5582 Case Side and S-5583 Case Side Assembly are being superseded by 75012 Case Side only.

BP6D Replacement Parts

The following parts substitutions cover 2 items of BP6D Replacement Parts.

S-5582, Case Side and S-5583, Case Side Assembly, are being superseded by 75012 Case Side only.

When using 75012 to replace S-5583, it will be necessary to remove the loop coil from the old side and install it on 75012. If a new loop as well as a new side is required, order 75012 Side and 71079 Loop Coil and assemble together on receipt.

7Q51

Correction in Parts List:

S-9594 Screw—Chassis Mounting Screw—should be — S-9593.

9YY-9EY3

Loudspeaker (9EY3) — use S-5032.

S-5397—Dial Scale (9Y5)—should be — S-5297.

9W65

The following is a list of parts used on the 9W65, which are not covered by the 9W65 Parts List.

Resistor—100,000 ohms 10%, ½ watt (added across the output of the 78 RPM crystal).

S-5565 - Decalcomanias
S-5566 - Grille Cloth (18 x 10)
S-5342 - Dial Scale

Speaker Assembly

S-4349 - Cone - Cone and Voice Coil Assembly.

9W91

Correction in Replacement Parts List:

S-4381 - Power Transformer 25 cycles (T-2) should read — S-5078.

S-4379 - Power Transformer 60 cycles (T-2) should read — S-5079.

9W125

Correction in Parts List:

S-5323 — Coil S.W. 2 R.F. Coil (L9) should read — S-5080.

9W653

Correction in Parts List:

S-5350 — Dial Scale — has been changed to S-5342.

BP61

Eveready #756 should read — Eveready #756W.

V-306

Correction in Parts List:

S-5630—Condenser—Gang Condenser—should read—S-5360.

S-5398—Transformer—Power 60 cycle (T1)—use S-4378.

S-5939—Transformer—Power 25 cycle (T1)—use S-4380.

S-5357—Control—Tone Control + change to—S-5269.

V-307

Change in Parts List:

S-5263—Dial Scale—change to—S-5342.

V-309

Correction in Parts List:

S-5281—Dial—Dial Scale—change to—S-6169.

V-310

Add to Parts List:

75571—Case—Receiver and Record Changer Cabinet.

BP402

Discontinued:

S-5947—Case Front Assembly (complete).

There are two types of cabinets used on this model. In latter productions, a small opening was provided on the front of the cabinet to indicate as to whether the set is in the "on" or "off" position.

In order to prevent any possible confusion when ordering parts for these cabinets, the following information will be helpful.

Stock No.	Description	Used On
75787	Case Back only	(For both front cases)
S-5951	Case Front	(Does not have "ON" indication opening).
S-5952	Trim R.H.	For both type case*
S-5953	Trim L.H.	

The case with the "ON" indication opening is not available as a replacement part.

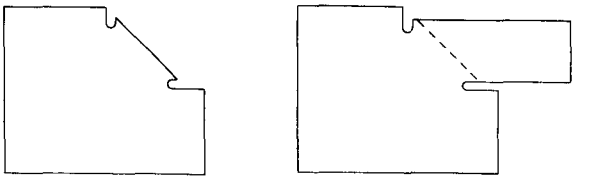

* When these trims are used on new cases, they are not to be modified as per sketch shown above.

V-405

Correction in Replacement Parts List:

Change - S-6202 - Coil - Oscillator Coil - to read - S-6306.

Amendment to V-405 - Service Note (Schematic).

The latter production of V-405 instruments incorporated the following changes. Please refer to your V-405 Service Note.

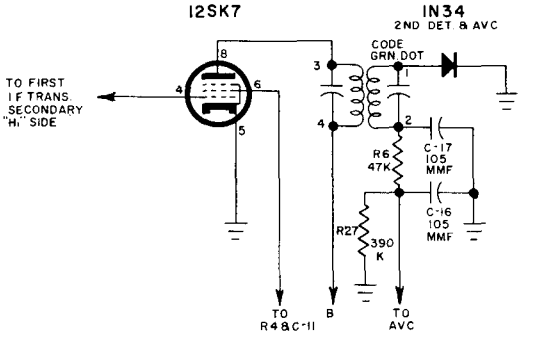

CHANGES:

(1) 12SF7 tube changed to 12SK7 and tube socket rotated 180°.

(2) C-20, 10MMF capacitor removed.

(3) IN34 crystal added — RCA stock #S-7579.

V-406 - V-416

Hum Eliminations in Models V406 & V416

Due to reports received from the field on excessive modulation hum on Models V406 and V416 receivers, the Standard Broadcast antenna coil has been redesigned to alleviate this condition.

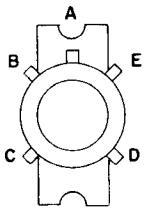

FIG. 1

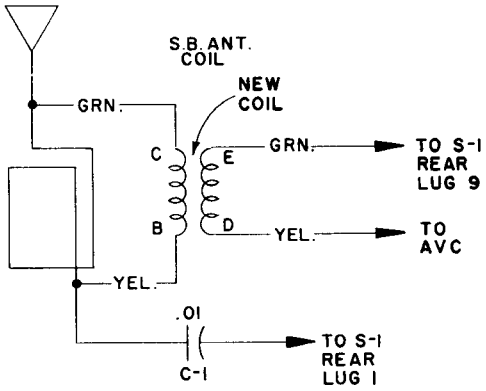

FIG. 2

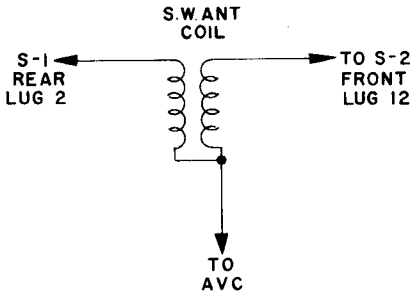

FIG. 3

Should such a condition impair the listening quality of any one of the above mentoned receivers, the following changes should be made.

(a) Remove antenna coil L-2 located on top of chassis next to gang condenser and replace with new coil *S-6235* as shown in Fig. 1. (Stock old coil as S-6360).

(b) Remove bus wire from A.V.C. to Lug 12 on S-1 rear, and connect lug 12 to chassis ground.

(c) Wire in coil *S-6235* as shown in Fig. II.

(d) Re-wire Short Wave antenna coil as shown in Fig. III.

V-406 and V-416

Amendment to Schematic:

The latter production of models V-406 and V-416 instruments incorporated the following changes. Please refer to your V-406 and V-416 Service Note.

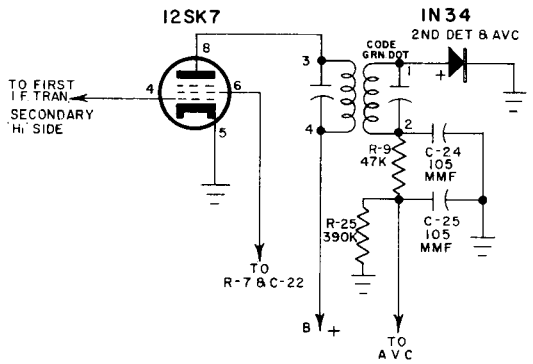

CHANGES: (Refer to original schematic of V-406 and V-416).

(1) 12SF7 tube changed to 12SK7, and tube socket rotated 180°.

(2) C-23 removed.

(3) IN34 crystal added—RCA stock #S-7579.

Amendment to Phone Compensation:

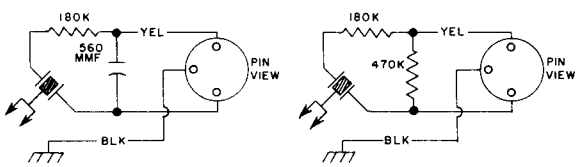

Changes to Parts List (V-406 and V-416).

Change - S-5813 - Speaker 10" - to read - S-5928.

BP500

Changes in Parts List:

Change - 74562 - Washer - Spring Washer for Carrying Handle to - 74352.

Add - 74317 - Dial Back Plate.

Model C-501

Clock Operation

If these receivers have been stored so that the clock has been lying face up in the carton for a period of time, oil in the clock motor drains behind a retaining place.

When placed in operation after this storage period, the clock may run slow for a period of about fifteen minutes, after which this condtion corrects itself.

BT-502

Change in Parts List:

S-5398 - Cabinet - use - S-3472.

Add: S-6361 - Speaker 4" x 6" elliptical P.M.

BT-504

A 47 mmf. capacitor has been added from the antenna lead to ground to eliminate "hand" effect.

This addition is effective on all receivers manufactured from this date.

V-506

Clouding of Escutcheon on V-506

Since the escutcheon is made by styrene, there is a possibility of static charge building up on the inside surface whenever the escutcheon is wiped with a cloth.

This charge which is built up in the inside surface of the escutcheon attracts dust to such an extent that the inner surface becomes cloudy.

In order to reduce these charges an Anti-Static solution stock number S-6925 may be applied to the front surface of the escutcheon.

Procedure:

1. Clean the escutcheon with a soft cloth, both front and rear; also the dial plate.
2. Apply the Anti-Static solution on a soft cloth and thoroughly wipe the front of the escutcheon.

A-550 - A-550X

When installing these receivers, it is nececsary for the inter-unit cable to be secured to a mounting bracket or other support by taping.

This should be done as near as possible to the female plug connector to prevent cable lead breakage due to vibration.

A-552

Ignition Interference—RCA Victor Auto Receivers: A752, A552, A552X

When ignition inteference is found excessive with any installation of the above RCA Victor auto receiver models, the dressing of the inter-unit connecting cable should be examined. It has been found that some of the ignition interference present on these models where installation conforms to the instructions packed with the set, is caused by pickup on the interconnecting cable between the set and speaker or the dressing of the cable. The exact form the dressing will take varies for different installations. However, a solution can be found for any particular installation by bearing in mind that the object of such dressing of this cable is to:

(1) Relocate the cable as far away as possible from any source of interference, such as car wiring or instruments.

(2) To make the run of the cable such that any induced voltage from the interference source will cancel out in the two halves of the cable.

Parts Lists—Parts substitution.

S-4795 - Tuner - Permeability Tuner - use - S-5601.

A-552X

Add to Parts List:

S-5816 + Speaker 5" P.M.

When installing the above auto set, it is necessary for the inter-unit cable to be secured to a mounting or other support by taping.

This should be done as near as possible to the female plug connector to prevent cable lead breakages due to vibration or movement.

A-558 & A754

Adjustment of Permeability Tuners on A558 and A754 Auto Sets

In view of the difficulties being experienced in the field on aligning permeability tuners as used in the A-558 and A-754 auto sets, we are releasing herein instructions on how these tuners should be aligned and the calibration that is to be expected.

(1) Rotate tuning until cores are completely in the coil.

(2) Adjust the cores so that the bottom end of the cores are 15/32" from the bottom end of the coil form. This is done by turning the core in or out as the can may necessitate by the screw driver slot in the bottom of the core.

(3) With the tuner wide open (slugs out of coils) apply a 1600 KC signal through standard dummy antenna and align the oscillators and antenna trimmers for maximum output.

(4) Tune in 1350 KC and adjust antenna coil core for maximum output (adjust coil as stated in step 2).

(5) Repeat steps 3 and 4 until no further increase in sensitivity is noted.

When the cores are adjusted, a distance of 15/32" from the bottom end of the coil form, the inductance of the coils are at the maximum. Since at this point the tuning is very broad, no adjustment is made at the low frequency end because the high frequency end would be offset.

The calibration at the low frequency end may be improved by adjustment of oscillator trimmer; this will tend to shift the calibration at the high end of the band slightly, however a compromise setting may be obtained.

If this method does not prove to be satisfactory, it is suggested that the tuner be aligned in the manner outlined in 1, 2, 3, 4 and the pointer be adjusted to the nearest calibration point desired, and then checked for calibration at other points along the band.

X-600

Add to Replacement Parts List:

S-5955 - Cabinet (Ivory)

V-607

Change in Parts List:

Change S-6264 - Coil - S. B. Osc. Coil - to read - S-6181.

V-607, V-506

Remove line between R-12, 470K, V-5 grid load resistor and ground made at junction of R-15, 470K, V-6 grid load resistor.

A-752

Add to Parts List:

S-5905 - Inter Chassis Cable.

Little Master IV

Wiring Error

A small number of Little Master IV receivers were shipped with the wiring to the phono socket reversed.

Should you receive customer compaints that these receivers will not work with a record attachment, the connection of the blue and green wires going to the phono socket should be reversed.

Addition to Parts List:

S-6725 - Knob - Volume (White)

S-6726 - Knob - Volume (White)

Change - 74165 - Speaker - to read - S-4405.

Nipper

Oscillator Stoppage

Reports received from the field indicate that some oscillator coils as used in our model "Nipper" may develop resistive contacts to the coil windings sufficient to cause the oscillator to become inoperative or intermittent.

This condition may be remedied by cleaning the coil connections and resoldering.

Loop Antennas Nipper Receiver

Where the loop antenna on the Nipper receiver has separated from the back cover, it is suggested that the loop be secured in the following manner.

The loop should be held in position and secured to the back by a long strip of "Scotch" or "Cellulose" tape. By working the tape into the material of the back cover, a sufficiently strong adhesion will result.

Cone Replacement on S-5813 Speaker

There are two types of speakers covered by stock number S-5813. One has a 7/8" voice coil and the other has an 11/16" voice coil.

Correct cone indentification for these speakers is as follows:

No. Stamped on Cone	Voice Coil Diameter	Stock No.
2416-1	7/8"	S-5672
2456-1	11/16"	S-5929

SUPPLEMENTARY INFORMATION (Record Players)

45 RPM Record Players

Crystal Cartridges Used In RP-190 Record Changer — 45J2 - 45EY3

To clear up some confusion which appears to exist regarding replacement crystals and needles for 45J2 and 45EY3 record players, we would refer you to page 12 of the RP-190 Service Note and the column headed NOTE: This reads as follows: The original crystal cartridge as supplied with the instrument uses a non-replaceable needle. The replacement cartridge, 74067, is the standard 45RPM cartridge and the replacement needle is S-5529.

However, some later production RP-190 used in 45J2 and 45EY3, use a crystal cartridge with a replaceable needle. The replacement needle for this cartridge is stock # S-5529, but the needle guard requires a slight amount of bending in order that needle point may clear the guard. S-5529 has been specified as a replacement for Standardization purposes.

On the cartridges with non-removable needle, when the original needle wears out, it is necessary to change the cartridge. Stock # 74067 is the replacement cartridge used. The replacement needle for #74067 cartridge is S-5529.

RP-200

50 Cycle Conversion

The motor used on production of RP-200 does not lend itself to the usual type of 50 cycle conversion, i.e., by use of a motor shaft conversion spring.

When converting these changers the complete motor should be replaced by S-5637 motor which is suitable for 50 cycle operation. S-5637 is supplied with a conversion spring.

Crystal Cartridges - RP200 Record Changers And Crystal Mounting Mechanisms

The RP200 record changer was released to the field with three different crystals. In order to prevent any possible confusion which may arise when the crystal or stylus is being replaced, we are listing below informaton which will enable proper crystal identification and correct stylus replacement for the crystal on hand.

Crystal Cartridge Identification:

No. Stamped on Crystal	RCA Stock No.	Crystal Mounting Mechanism	Knob
75475 (RCA)	75475	S-6444	S-6445
P72V (Shure)	75044	S-6442	S-6443
ACDIM or ACD2M (Astatic)	S-6210	S-6446	S-6447

Stylus Replacement

Crystal	Replacement Stylus	
	33-1/3 RPM	
75475	75496	75497
75044	75045	75046
S-6210	S-6212	S-6211

RP201

Crystal Cartridges—RP-201 Record Changers

There are two different types of crystal cartridges used on RP-201 changers currently being supplied in our models V-309 and V-312. These two cartridges and their stylii are not interchangeable.

Stock #75475: This is the original type cartridge as used on the first 200 changers installed in early production V-309 and V-312. This cartridge may be identified by the broad, thin case and by the number 75475 stamped along one edge of the aluminum case.
The current replacement needles for 75475 cartridge are:

Stock #75497 — 78 RPM Osmium tipped needle.
" #75496 — 33-1/3 RPM " " "

Stock #75044: This is the cartridge used on later production of RP-201 changers. This is a Shure cartridge and the manufacturer's name is on the case. The case colour is light brown. The correct replacement needles for this cartridge are:

Stock #75045 — (Red) for 33-1/3 R.P.M. Section.
" #75046 — (Plain) " 78 " "

The above cartridges are not directly interchangeable. However, it may occasionally be necessary to replace the 75475 cartridge by #75044 in order to remedy a condition in the RP-201 changer which results in the needle jumping into the playing grooves on landing. In order to make either modification, it is necessary to replace 75811, crystal mount and swivel assembly, by S-6006.

Refer to your copy of RP-201 Service Manual and make the following additions to the Parts List:

Item 11 —#75044—crystal cartridge (later production)
Item 11A—#75046—needle 78 RPM for 75044 cartridge.
Item 11B—#75045—needle 33-1/3 RPM for 75044 cartridge.
Item 12A—#S-6006—mount—crystal mount and swivel assembly for later producton (75044 cartridge).

124196 Series:

Addition to 124196 Automatic Record Changer — Parts List

Please add the following stock number to your parts list.
S-6842 — Idler Wheel.

Model 124196 Record Changer Mechanism

Please make the following corrections in your 124196 Record Changer Service Note, on page 297.

Stock No. 75046 — Stylus
should read — 75497 Stylus.

Stock No. 75045 — Stylus
should read — 75496 Stylus.

Motors on 124196 Series—3-Speed Changer

A new type of motor is being used on present production of 3-speed changers. It is easily distinguished from the earlier type by its speed change mechanism.

This new motor has a disc type speed change mechanism which moves up and down the motor shaft, whereas the earlier type had three different pulleys.

These new motors are available as replacement parts under stock number:

S-6886 — 25 cycle motor
S-6969 — 50 cycle motor
S-6956 — 60 cycle motor

Speed Difficulties in 60 Cycle Motors

Where slow speeds are encountered in the 60 cycle 124196 three-speed record changer, it is suggested that the present motor be replaced by S-6956 Motor.

Tone Arm Landing Adjustment On 124196 Record Changer

In instances where the tone arm does not land properly on records, we suggest that the landing adjustment be checked.

If this does not remedy the trouble, we suggest that spring (Key #125 on page 296 of the 124196 Service Note) be stretched or washers be added to put more pressure behind the spring, so as to get the tone arm to land properly on the three types of records.

PARTS LIST FOR
MODEL C-501 — CLOCK MECHANISM

Stock No.	Description
S-6892	Dial — Black
S-6893	Dial — Ivory
S-6894	Dial — Red
S-6895	Hands — Alarm Dial
S-6896	Hands — Hour & Minute — Gold
S-6897	Hands — Sweep Second — Red
S-6907	Hands — Sweep Second — Cream Tan.
S-6808	Knobs — Alarm & Time Set — Bronze

MOVEMENT PARTS

S-5788	Alarm Hand Sleeve
S-6899	Alarm Set Shaft
S-6900	Base Plate Assembly
S-6901	Cam Shaft Assembly
S-5792	Cam Shaft Washer
S-6121	Field and Coil
S-6903	Front Plate Assembly
	" " "
	" " "
S-5796	Hour Hand Sleeve
S-5797	Intermediate Shaft
S-5798	Minute Hand Sleeve
S-5799	Rotor Unit — 60 cycle
S-5802	Rotor Unit Spacer (2)
S-5803	Sweep Second Hand Shaft
S-6904	Switch Contact Assembly
S-5805	Switch Index Spring
S-6905	Switch Lever Assembly
S-6906	Time Set Shaft
S-5806	Time Set Shaft Spacer
S-20,012	Washer — Gear Stack

RCA VICTOR

"HIS MASTER'S VOICE"

MODEL BP5C

PORTABLE 5 TUBE SINGLE BAND AC-DC SUPERHETERODYNE

TECHNICAL INFORMATION AND SERVICE DATA

1949 No. 2

GENERAL SERVICE DIVISION • RCA VICTOR COMPANY, LTD.

Electrical and Mechanical Specifications

Frequency Range .....540-1,600 kc
Intermediate Frequency .....455 kc
Power Supply Rating
110 to 125 volts, AC 50 or 60 cycles, or DC..18 watts
Batteries required ....1 Eveready Battery Pack W167

Tube Complement
(1) RCA—1R5 .....Converter
(2) RCA—1T4 .....I. F.-Amplifier
(3) RCA—1U4 .....2nd Det. AVC. & A.F.-Amplifier
(4) RCA—3V4 .....Power Output
(5) RCA—117Z3 .....Rectifier

Current Consumption
Battery Operation....."A" 60 ma., "B" 10 ma.
(Average life of Eveready W167 Battery 100 hrs. intermittent service.)
Total Rect. Current (117 volt, 60 cycle).....60 ma.

Power Output (AC Operation)
Undistorted ..... .15 watt
Maximum ..... .25 watt
(Output is slightly lower on battery operation)

Loudspeaker .....4 in. P.M. 3.4 ohms at 400 cycles

To Remove Carrying Handle

1. Pull off the volume control knob.
2. Insert a small knife blade between one side of a spring clip and the cabinet as shown below, push upward on the slip shield to disengage the locking of the slip shield to the spring clip. Repeat this procedure on the other side of the spring clip. The slip shield may then be removed by pushing it upward thus disengaging it from the spring clip.
3. Repeat step 2 for each slip shield.
4. Remove the four screws (2 on each side) which hold the carrying handle to the case.

Caution: When re-assembling make certain that the slip shield and the spring clip is assembled with their locks in the correct relation to each other.

To Remove Chassis

1. Pull off the volume control knob.
2. Close tuning condenser (dial at 55) to prevent possible damage to tuning condenser.
3. Remove dial knob by grasping both sides with the tips of the fingers of both hands and pull to the front —or—close the tuning condenser, open the back, reach in and push outward on the hub of the dial knob.

NOTE: When re-assembling press inward on the back of the tuning condenser and on the front of the knob to properly seat the hub on the shaft.

4. Remove the two slip shields on the R.H. side of the cabinet (opposite the volume control) and unfasten the end of the carrying handle using the procedure described under, "To Remove Carrying Handle."
5. Unsolder the loop leads.
6. Remove the two screws holding the bottom edge of the speaker to the cabinet.
7. Remove the plug from the battery.
8. Remove the two screws at the top of the cabinet while supporting the chassis with one hand.

NOTE: When re-installing replace speaker holding screws first but do not securely tighten until the two screws at the top of the cabinet have been tightened.

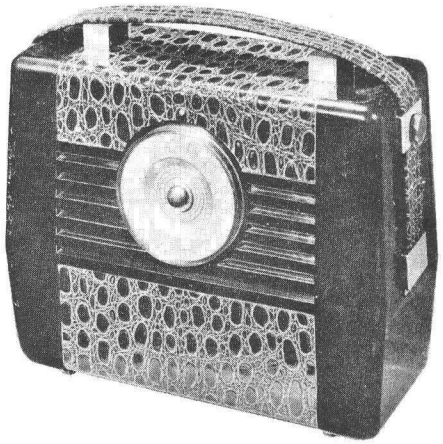

Note: Handle Retaining Links not shown on photo

Cabinet Dimensions
Height.....9½ in. Width.....11 in. Depth.....5 in.

CAUTION.—
Do not remove any tubes from the chassis with the set operating and the plug connected to the power line. Damage to tubes may result.

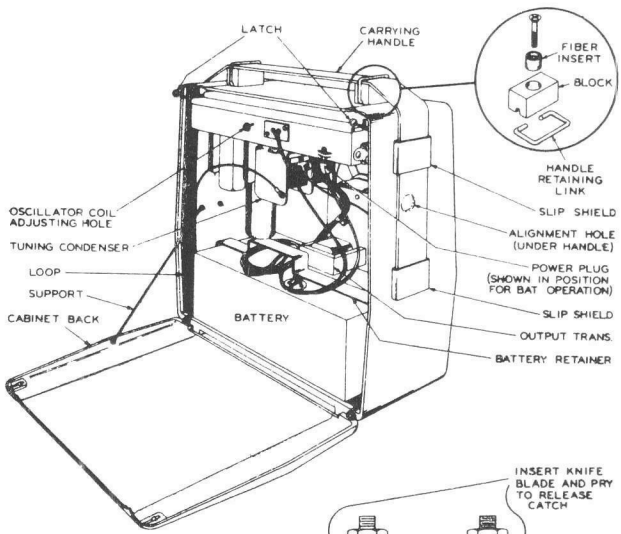

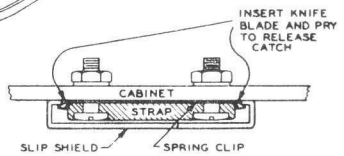

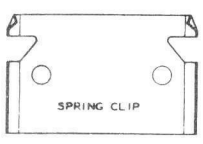



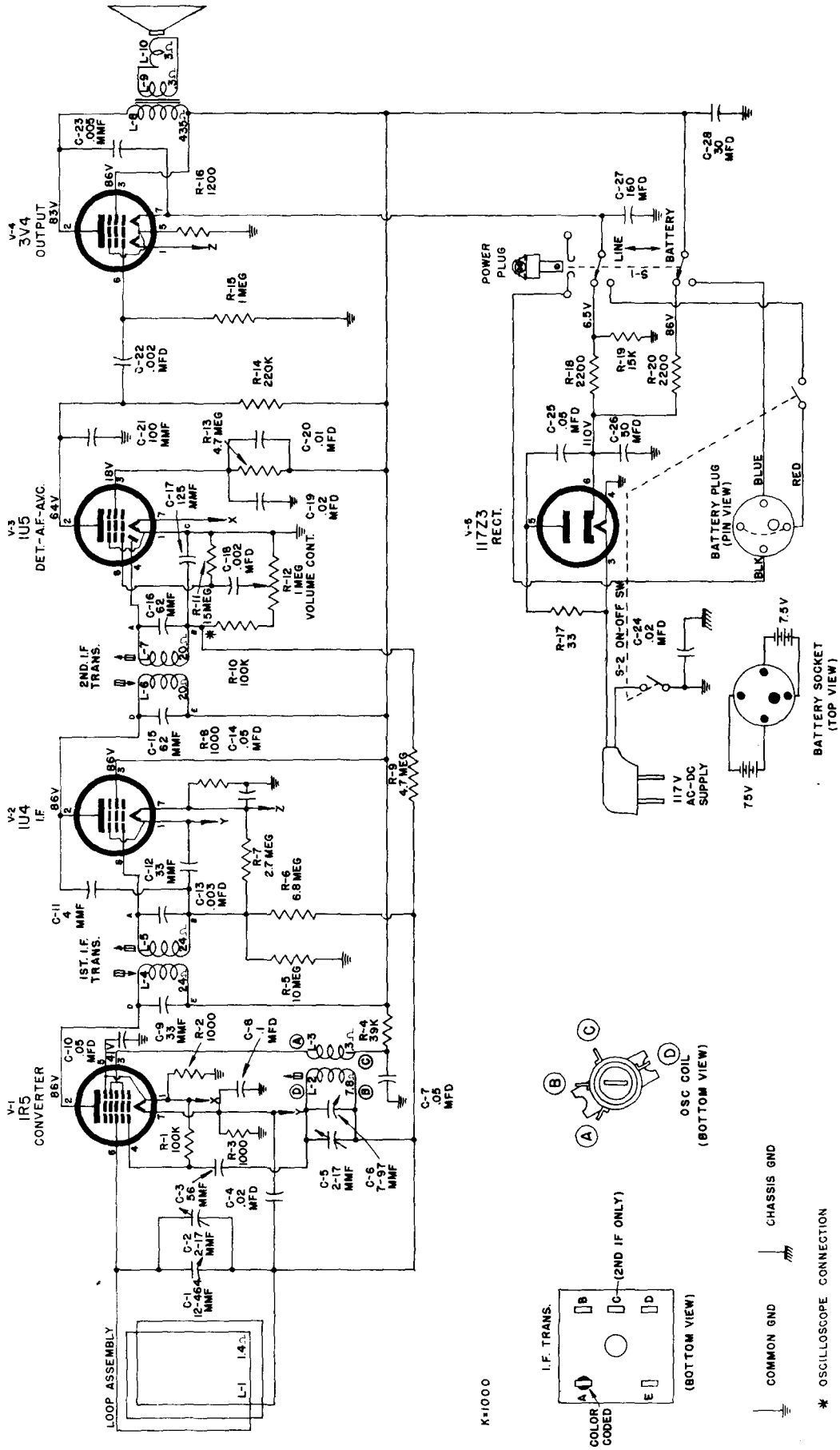

SCHEMATIC DIAGRAM

SERVICE DATA

AC-DC Operation

This receiver will operate on 105 to 125 volts, AC 25 or 60 cycles, or DC.

A power cord is stored inside the cabinet. To open the cabinet, push upward on the two metal ball catches at the top rear of the cabinet. Remove the plug of the power cord from its socket on the chassis and insert the plug into a convenient electrical outlet. A slot in the bottom of the back cover allows the back to be closed with the cord passing through.

NOTE: If reception is not obtained on DC, reverse plug in outlet receptacle. This may also reduce hum on AC operation.

When returning to battery operation replace the plug in the socket provided on the chassis, roll up the cord and place under the raised portion of the battery holder bracket.

NOTE: Make certain that the plug is fully inserted to assure proper operation of the Batt-Line switch.

Insulating Washers:

The tuning condenser is insulated from the chassis with rubber washers. In servicing make certain that these are in place and properly positioned.

Cabinet Hinges

The cabinet hinges may be readily removed, they are secured to the cabinet and back by force fit. To remove back from cabinet—pull straight outward on both hinges at the same time.

Critical Lead Dress

1. Dress output plate bypass C-23 capacitor against chassis.
2. Dress output plate lead to output transformer against chassis.
3. Dress audio coupling capacitor C-18 (Volume control to grid of 1U5) away from chassis, away from audio limiting resistor R-10 and to permit adjustment of second I.F. Transformer.
4. Dress all exposed leads away from each other, and away from chassis to prevent short circuits.
5. Dress all filament and ground leads against chassis.
6. Dress filament bypass capacitor C-14 and accompanying compensating resistor R-8 (volume control to 1U4 socket) against volume control.
7. Dress power line cord away from line-battery switch mechanism.
8. Dress all capacitors and wiring away from oscillator coil.
9. Dress 4 mmf. neutralizing capacitor C-11 against A.V.C. bypass capacitor C-12. (1U4 filament to first I.F. trans.).

Alignment Procedure

Cathode Ray Alignment is the prererable method. Connections for the oscilloscope are shown on the schematic diagram.

Output Meter Alignment.—If this method is used, connect the meter across the voice coil and turn the receiver volume control to maximum.

Test Oscillator.—For all alignment operations, connect the low side of the test oscillator to the Common Ground and keep the oscillator output as low as possible to avoid AVC action.

Battery operation of the receiver is preferable during alignment; on AC operation an isolation transformer (117v./117v.) may be necessary for the receiver if the test oscillator is also AC operated.

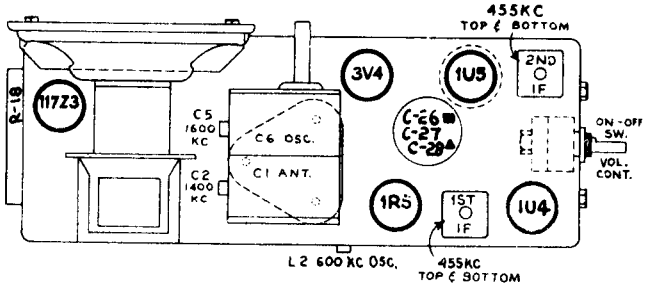

Tube and Trimmer Locations

Order of Alignment		TEST OSCILLATOR: Connect "HI" Side To	Connect "LO" Side To	Dummy Antenna	Frequency Setting	Range Selector	Receiver Dial Setting	Circuit to Adjust	Adjustment Symbols	Notes
I.F. ALIGNMENT	1	Disconnect loop - remove chassis - remove bottom plate, connect a 10,000 ohm resistor from C1 stator terminal to tuning condenser frame.								
	2	1U4 I.F. Grid	Gnd	.01 mfd	455 Kc		550 Kc	2nd I.F. Trans.	Top & Bottom Cores	Max. output
	3	1R5 Conv. Grid	Gnd	.01 mfd	455 Kc		550 Kc	1st I.F. Trans.	Top & Bottom Cores	Same
	4	Remove the 10,000 ohm resistor. Replace bottom cover and install chassis in cabinet. Re-connect loop.								
S.B. ALIGNMENT	5	SHORT WIRE PLACED NEAR RECEIVER (FOR RADIATED SIGNAL)	Gnd		1600 Kc		1600 Kc	Osc.	C-5	Same
	6		Gnd		1400 Kc		1400 Kc	Ant.	†C-2	Same
	7		Gnd		600 Kc		600 Kc	Osc.	L-2 (Rocking Gang)	Same
	8	Repeat steps No. 5, 6 & 7								

† Adjustable thru hole in side of case which is accessible after unfastening one end of the carrying handle.

REPLACEMENT PARTS FOR MODEL BP5C

Insist on genuine factory tested parts, which are readily identified and may be purchased from authorized dealers.

STOCK NO.	DESCRIPTION		STOCK NO.	DESCRIPTION	
	RECEIVER ASSEMBLIES		73129	Transformer - 1st I.F. (L4-L5-C9-C12)	
			73130	Transformer - 2nd I.F. (L6-L7-C15-C16-C17)	
73153	Capacitor 4.7 Mmf. (ceramic) (C11)		73125	Volume Control (R12) 1 Megohm (S2)	
71924	Capacitor 56 Mmf. (ceramic) (C3)				
S-4674	Capacitor 100 Mmf. (ceramic) (C21)			**SPEAKER ASSEMBLY**	
S-3646	Capacitor .005 Mfd. (C23)				
S-4675	Capacitor .003 Mfd. (C13)		S-3556	Dust Cap (Pkg.3)	
S-4676	Capacitor .002 Mfd. (C18-C22)		S-4330	Cone - cone & voice coil assy (L10)	
S-3648	Capacitor .01 Mfd. (C20)		S-4332	Speaker	
S-3650	Capacitor .02 Mfd. (C4-C19-C24)		S-4333	Output transformer (L8-L9)	
70615	Capacitor .05 Mfd. (C10-C7-C14-C25)				
S-3655	Capacitor .1 (C8)			**MISCELLANEOUS ASSEMBLY**	
73127	Capacitor Electrolytic (50-30-160 Mfd.) (C26-C27-C28)		73134	Back - Cabinet back (less hinges)	
			73147	Ball - for back cover latch (Pkg. 2)	
73126	Condenser - Variable (C1-C2-C5-C6)		73136	Button - centre button for dial knob	
S-4334	Coil - Oscillator coil with core & stud (L2 - L3)		73142	Button - station selector indicator button (Pkg. 2)	
73141	Loop - Antenna Loop (L1)		S-4399	Cabinet - Front	
73237	Resistor - 33 ohms W.W. (R17)		S-4400	Cloth - Aligator cloth for cabinet	
34766	Resistor - 1000 ohms ½W. (R3-R2-R8)		S-5026	Clip - Spring clip for vol. control & power switch (Pkg. 2)	
30731	Resistor - 1200 ohms ½W. (R16)				
73132	Resistor - 2200 ohms 7 watt (voltage divider) (R20)		73148	Catch - spring catch for back cover (L.H.)	
			73146	Catch - spring catch for back cover (R.H.)	
34767	Resistor - 2200 ohms ¼ watt (R18)		73143	Handle - carrying handle	
36714	Resistor - 15,000 ohms ¼ watt (R19)		73144	Hinge - cabinet hinge	
30147	Resistor - 39,000 ohms ¼ watt (R4)		73135	Knob - dial knob complete	
3252	Resistor - 100,000 ohms ¼ watt (R1-R10)		73138	Knob - volume control & power switch	
14583	Resistor - 220,000 ohms ¼ watt (R14)		73459	Link - carrying handle link (Pkg. 2)	
30652	Resistor - 1 Megohm (R15)		73275	Plug - battery cable plug	
S-5074	Resistor - 2.7 Megohm (R7)		73139	Shield - slip shield for carrying strap (bottom R.H. & L.H. & upper L.H.)	
30931	Resistor - 4.7 Megohm (R9-R13)				
14661	Resistor - 6.8 Megohm (R6)		73140	Shield - slip shield for carrying strap (upper R.H.)	
30992	Resistor - 10. Megohm (R5)				
S-4677	Resistor - 15. Megohm (R11)		70425	Spring - retaining spring for dial knob (Pkg. 2)	
73117	Socket - tube socket (less shield)				
S-4860	Socket - tube socket (with shield)		73483	Support - flexible drop support for back cover	
73133	Switch - D.P.D.T. (S1)				

All prices and parts are subject to change or withdrawal without notice.



MODEL BP5D

RCA VICTOR

"HIS MASTER'S VOICE"

AC-DC BATTERY PORTABLE RECEIVER

MODEL BP5D

SERVICE DATA

—1950 No. 14—

GENERAL SERVICE DIVISION

RCA VICTOR COMPANY LIMITED

MONTREAL, QUE.

Electrical and Mechanical Specifications

Tuning Range ---------- 540-1,600 kc

Intermediate Frequency ---------- 455 kc

Tube Complement

(1) 1R5 ---------- Converter
(2) 1U4 ---------- I.F.
(3) 1U5 ---------- Det.—A.V.C.—A.F.
(4) 3V4 ---------- Output

Rectifier ---------- A Selenium Rectifier is used

Power Supply Rating

Power line operation

117 volts d.c. or 25 to 60 cycles a.c. ---------- 20 watts

or

Battery operation

1 Eveready 755 Battery Pack
(Battery life—approx. 100 hrs. intermittent service)

Power Output

A.C. operation ------ .15 MW undistorted, .25 MW max.
Battery operation (Output is slightly lower)

Loudspeaker

Size and type ---------- 4 in. P.M. Dynamic
Voice coil impedance ---------- 3.4 Ohms at 400 cycles

Dial Drive Ratio ---------- 8:1 (4 turns of knob)

Cabinet Dimensions

Height 9 inches Width 11 inches Depth 5¼ inches

Weight ---------- 5 lbs. (less batteries)

AC-DC Operation

A power cord is stored inside the cabinet. To open the cabinet, pull backwards on the top of the cabinet back. It is secured by means of two spring clips and catches on the inside of the cabinet. Remove the plug of the power cord from its socket on the chassis and insert the plug into a convenient electrical power outlet. A notch in the right side of the cabinet allows the back to be closed with the cord passing through.

Notes: 1. Maximum performance is obtained with the battery in place. Receiver sensitivity will be lowered if the battery is not in place during AC-DC operation since the battery affects the loop inductance.

2. If reception is not obtained on DC, reverse plug in power outlet. On AC operation, reversal of the plug may reduce hum.

To Remove Carrying Handle

(1) Rotate links by 180° when strap is laying flat on cabinet.
(2) Remove strap from open end of link.

Battery Operation

Replace the power cord plug in the socket provided on the back of the chassis. Coil up the power cord and place it alongside of the battery. Make certain that it will not interfere with the tuning condenser.

Note: Make certain that the plug is fully inserted (base of plug touching chassis) to assure proper operation of the Batt-Line switch.

Cabinet Back and Hinges

Insert a screwdriver under one hinge and pry the centre of the hinge out of the opening in the cabinet while maintaining pressure on the back with the fingers and on the cabinet with the thumb. Repeat this procedure with the other hinge. Pull the back straight to the rear using both hands.

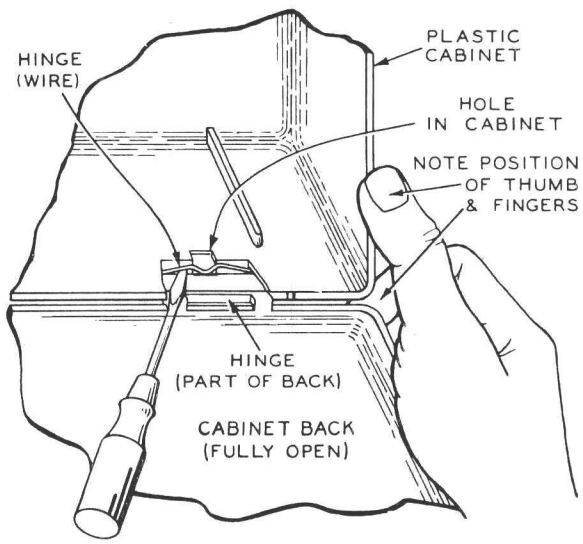

Fig. 1—Removal of Cabinet Back

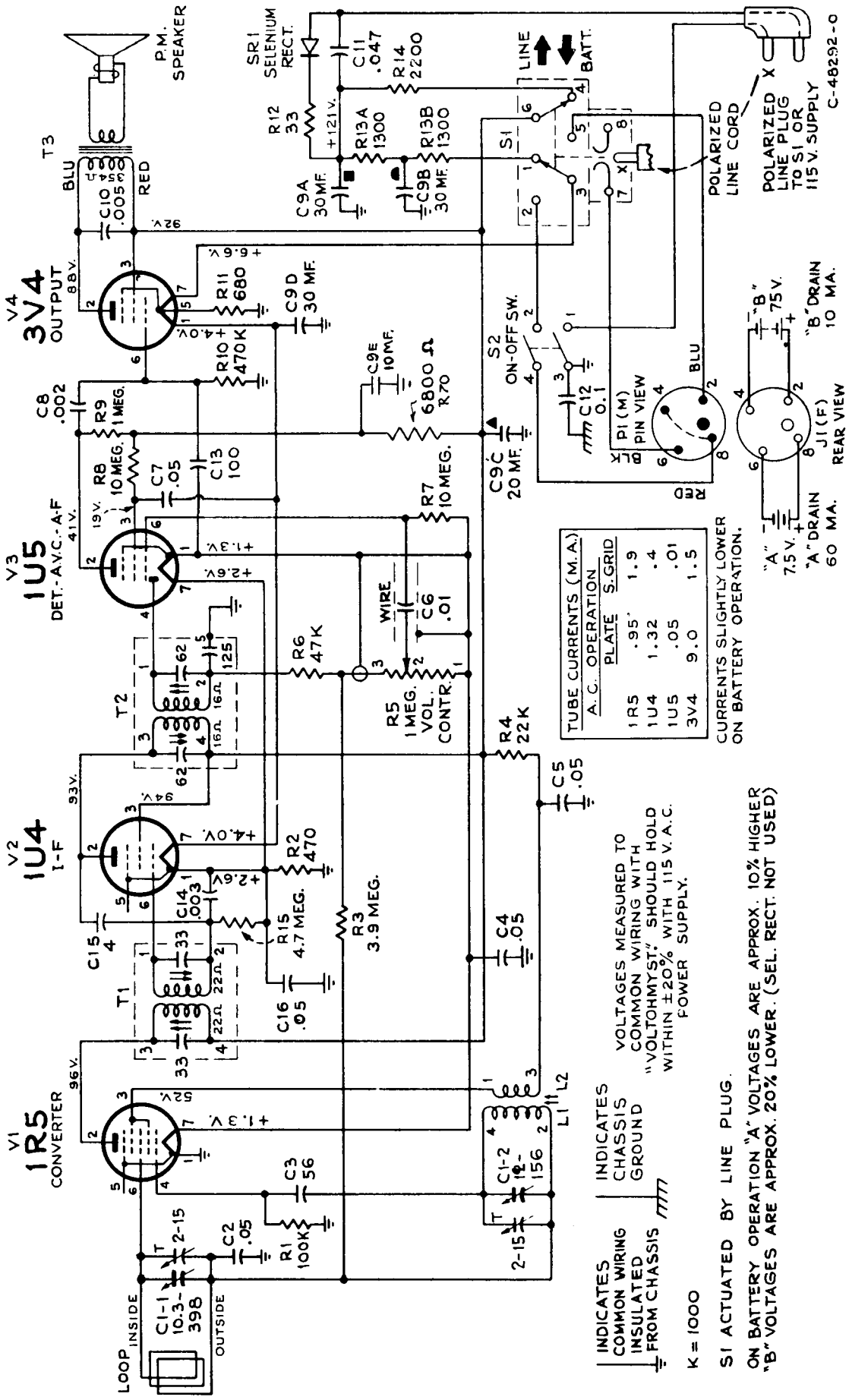

FIG 2. SCHEMATIC DIAGRAM

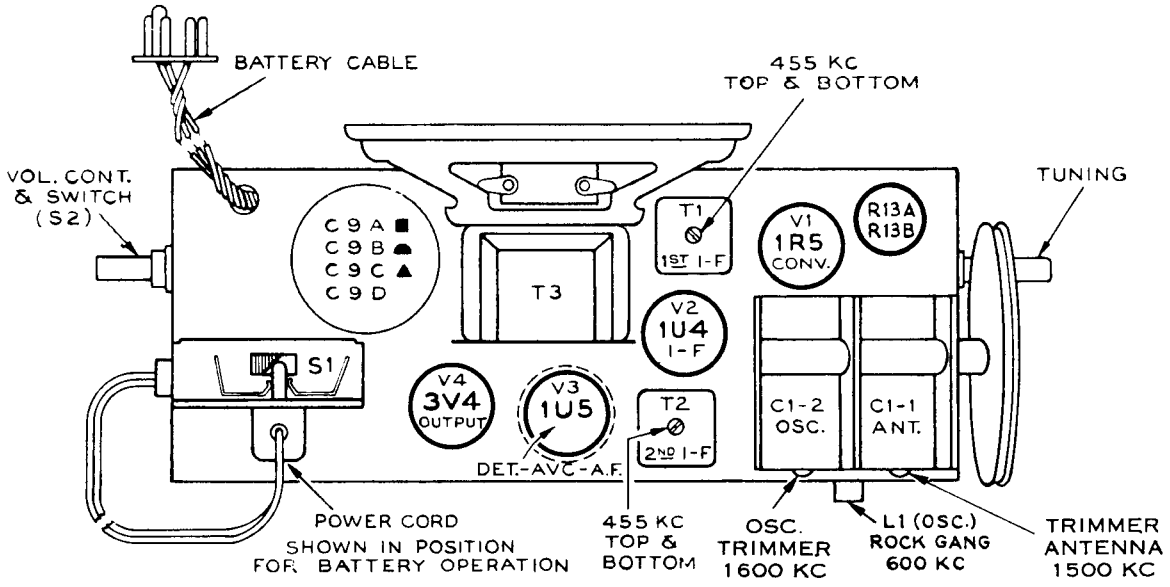

Fig. 3—Chassis Layout and Alignment Adjustment

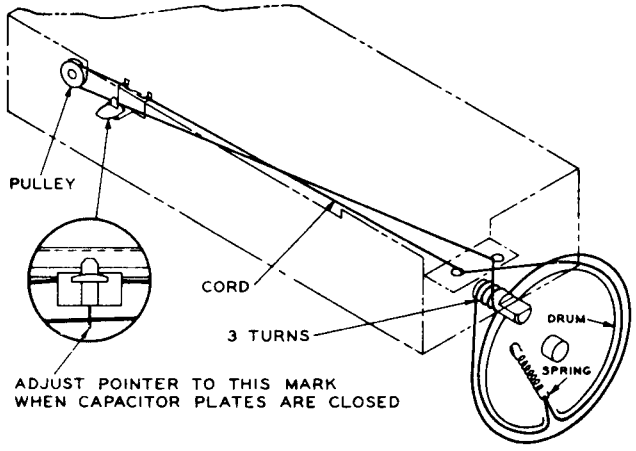

Fig. 4—Dial Cord Stringing

Critical Lead Dress

(1) Dress antenna leads away from trimmer adjustments.

(2) Dress all capacitors down against chassis.

(3) Locate capacitor (C-15) down against the .003 mfd capacitor (C-14).

(4) Dress output transformer primary leads against chassis.

(5) Dress power cord leads away from selenium rectifier.

(6) Dress capacitor C-4 to clear dial pointer.

Alignment Procedure

Signal Generator—For all alignment operations, connect the low side of the signal generator to the receiver chassis and keep the output as low as possible to avoid AVC action.

Battery operation of the receiver is preferable during alignment; on a. c. operation an isolation transformer (117v./117v.) may be necessary for the receiver if the signal generator is also a. c. operated.

Note: Battery must be in place for ant. alignment (step 3).

Dial Pointer Position.—With the tuning condenser fully meshed the center of the dial pointer should be in line with the score mark on the chassis.

Order Of Alignment		TEST OSCILLATOR				RECEIVER				
		Connect "HI" Side to	Connect "LO" Side to	Dummy Antenna	Frequency Setting	Range Selector	Dial Setting	Circuit to Adjust	Adjustment Symbols	Notes
I.F. Alignment	1	C-1-2 Gang	Common GND	39MMF	455KC		1600KC	1st.&2nd. I.F. Trans.	T-1 & T-2 Top & Bottom	Max. Out.
	2	Radiate Signal			1600KC		R.H.Side of Dial	Osc.	C1-2 Trimmer	Max. Out.
R.F. Alignment	3	Same			1500KC		1500KC	Ant.	C1-1 Trimmer	Max. Out.
	4	Same			600KC		600KC	Osc.	L-2 Rock Gang	Max. Out.
	5	Repeat steps 2,3 and 4.								

REPLACEMENT PARTS FOR MODEL BP5D

Insist on Genuine Factory Tested Parts, which are readily identified and may be purchased from Authorized Dealers.

STOCK NO.	DESCRIPTION
*S-5670	Capacitor-Variable tuning capacitor (C1-1, C1-2)
*73153	Capacitor-Ceramic, 4 MMF (C-15)
*39622	Capacitor-Mica, 56 MMF (C-3)
39628	Capacitor-Mica,100 MMF (C-13)
*S-5668	Capacitor-Electrolytic,2 sections of 30 MFD 150V, 1 section of 20 MFD, 150 volts & 1 section of 30 MFD, 25 volts (C-9A, C-9B, C-9C, C-9D)
	Capacitor-paper, .002 MFD, 200 volts (C-8)
	Capacitor-paper, .003 MFD, 200 volts(C-14)
	Capacitor-paper, .005 MFD, 400 volts(C-10)
	Capacitor-paper, .01 MFD, 400 volts(C-6)
	Capacitor-paper, .047 MFD, 400 volts(C-11)
	Capacitor-paper, .05 MFD, 400 volts (C-2, C-4, C-5,C-7,C-16)
	Capacitor-paper, .1 MFD, 400 volts(C-12)
S-3221	Capacitor-Electrolytic, 10 MFD (C-9E)
*S-5671	Coil-Oscillator coil (L-1,L-2)
*73275	Connector-5 contact male connector for battery cable
*S-5667	Control-Volume control and power switch (R-5,S-2)
71457	Cord-Power cord and plug
*S-4313	Cord-Dial drive cord (standard)
72283	Grommet-Rubber grommet to mount tuning condenser
*74838	Grommet-Power cord strain relief grommet (1 set)
*S-5669	Indicator-Station selector indicator
74322	Rectifier-Selenium rectifier (SR-1)
*73237	Resistor-Wire wound (fuse type) 33 ohms (R-12)
*75148	Resistor-Ceramic,2600 ohms, tapped at 1300 ohms, 10 watts (R-13A,R-13B)
	Resistor-470 ohms, 20% 1/2 watt (R-2)
	Resistor-680 ohms, 20% 1/2 watt (R-11)
	Resistor-2200 ohms,10% 1/2 watt (R-14)
	Resistor-6800 ohms,20% 1/2 watt (R-70)
	Resistor-22,000 ohms, 20% 1/2 watt (R4)
	Resistor-47,000 ohms, 20% 1/2 watt (R-6)
	Resistor-100,000 ohms,20% 1/2 watt (R-1)
	Resistor-470,000 ohms,20% 1/2 watt(R-10)
	Resistor-1 megohm 20%, 1/2 watt (R-9)
	Resistor-3.9 megohm 10%, 1/2 watt(R-3)
	Resistor-4.7 megohm 20%, 1/2 watt(R-15)
	Resistor-10 megohm 20%, 1/2 watt (R-7, R-8)
71039	Switch-"Line-Battery (S-1)
73129	Transformer-1st,I.F. Transformer (T-1)
73130	Transformer-2nd,I.F. Transformer (T-2)
*S-5666	Transformer-Output transformer (T-3)

SPEAKER ASSEMBLY

*S-5829	Speaker-4" P.M. Speaker
*S-5575	Cone-Cone & voice coil assy.

MISCELLANEOUS ASSEMBLIES

*74787	Board-Terminal board-2 contact
*S-5659	Case-Cabinet
*74339	Catch-Cabinet back catch part of Cabinet front)
*74734	Clip-Spring clip for knob
*74792	Clip-Striking clip for catch (part of Cabinet back) 2 required
*S-5662	Dial-Dial scale
*S-5661	Emblem-"RCA Victor" emblem
*S-5663	Handle-Carrying handle
*74790	Hinge-Cabinet hinge (2 required)
*S-5660	Knob-Tuning or volume control & power switch knob.
*S-5664	Link-Link for carrying handle (2 required)
*S-5665	Loop-Antenna loop winding
*75435	Screen-Crinoline screen for speaker grille
*74783	Plate-Decorative plate (satin finish) for cabinet (above dial)
*73103	Shield-Tube shield for 1U5 tube

* Indicates new stock items.

Only items listed under stock numbers are available as Replacement Parts.

All parts subject to change or withdrawal without notice.



RCA VICTOR

BATTERY PERSONAL RECEIVER

MODEL BP6D

SERVICE DATA

—1950 No. 9—

GENERAL SERVICE DIVISION
RCA VICTOR COMPANY LIMITED
MONTREAL, QUE.

MODEL BP6D

Electrical and Mechanical Specifications

Tuning Range .....540-1,600 kc
Intermediate Frequency .....455 kc

Power Supply Rating
Power Line Operation
115 volts, d. c. or 50 to 60 cycles a. c. .....15 watts
or
Battery Operated .....using RCA VS 019 Battery
(Average battery life—125 hrs. intermittent service)

Battery current .....“A” 50 ma., “B” 13 ma.

Tube Complement
(1) RCA 1T4 .....R.F. Amplifier
(2) RCA 1R5 .....Converter
(3) RCA 1T4 .....I.F.-Amplifier
(4) RCA 1U5 .....2nd Det.—AVC—1st A.F.
(5) RCA 3V4 .....Output

A selenium rectifier is used.

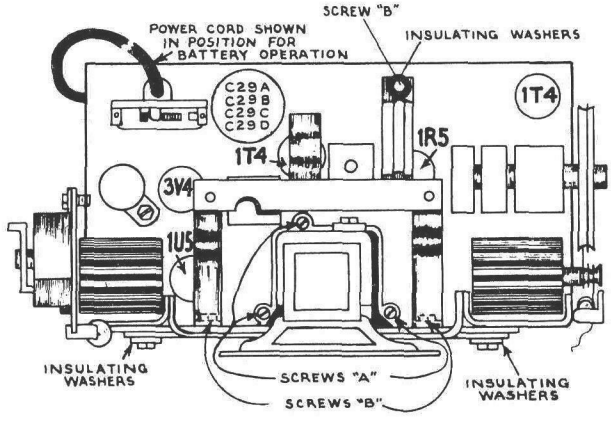

Chassis Assembly

To Remove Back Cover:

Push the wire latch on the bottom of the case to the right. Open the back about 3" and remove by easily lifting and sliding the top edge of the cover out of the case.

To Replace Back Cover:

Insert the top edge of the back cover into the case. Hold the top edge in position with one hand and press the bottom edge in place with the other hand until it is latched.

Weight (Approx.)
Without battery .....7 lbs. With battery .....10½ lbs.

Power Output
Undistorted ..... .150 watt
Maximum ..... .325 watt

Loudspeaker .....4 in. P.M.

Voice coil impedance .....3.2 ohms at 400 cycles

Cabinet Dimensions
Height .....10 in. Width .....13 in. Depth .....5½ in.

CAUTION.—

1. **Do not remove any tubes from the chassis with the set operating and the plug connected to the power line. Damage to tubes may result.**
2. **When cleaning the aluminum portion of the case use soap and water or cleaning fluid. Do not use abrasive cleansers.**

To Remove Chassis:

1. Loosen battery clamps, pull out battery and disconnect battery plug.
2. Unsolder the two loop antenna leads.
3. Remove the two large screws (under handle) in the top of the case (do not loosen small screws).
4. Lay receiver on table with face down.
5. Remove the two screws holding chassis to case sides.
6. The chassis may now be lifted from the case.

To Remove Speaker:

1. Remove chassis from case as described above.
2. Unsolder output transformer leads from speaker.
3. Un-hook dial cord tension spring.
4. Remove the two screws "B" holding dial bracket to chassis support bracket.
5. Remove the four screws holding dial bracket to chassis base.
6. Tilt dial bracket forward and remove three screws "A" holding speaker bracket to chassis base.

Insulating Washers:

The mounting bracket and dial frame are insulated from the chassis with insulating washers. This serves to insulate the case from the chassis. In servicing make certain that these washers are in place and properly positioned.

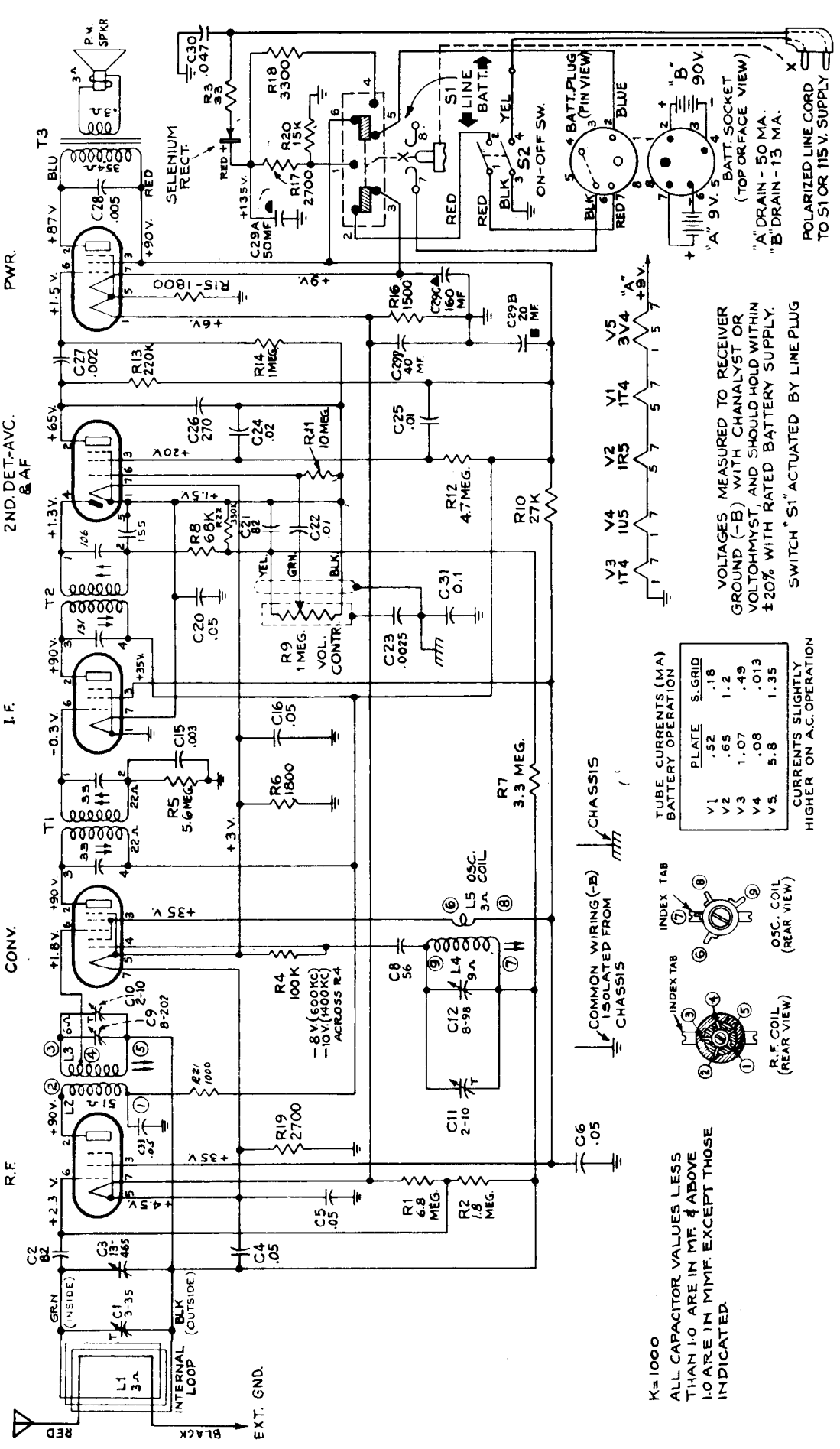

FIG. 2—SCHEMATIC DIAGRAM

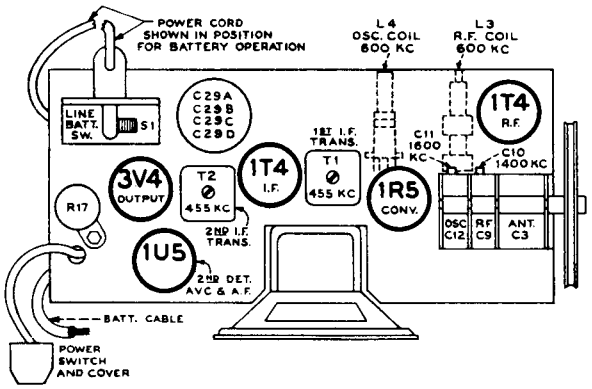

Tube and Trimmer Locations

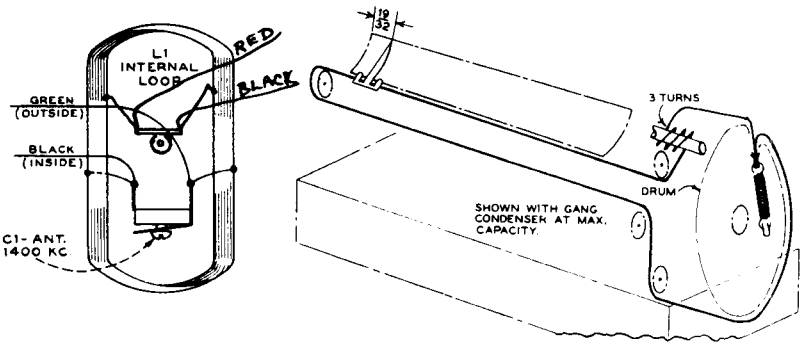

Dial-Indicator and Drive Mechanism

Critical Lead Dress

1. Dress all filament leads next to chassis.
2. Keep the leads short on the end of the three components, (R1, R2, C2) which connect to the grid terminal (#6) of the r.f. socket.
3. Dress tuning condenser leads direct and avoid excess lead length.
4. Dress loop leads away from tuning drum and battery.
5. Dress r.f. plate lead against chassis base.
6. Dress a.v.c. lead against chassis base.
7. Dress +B lead to output transformer against chassis base.
8. Dress 1st a.f. plate resistor (R13) up and away from other wiring.
9. Dress all leads away from the ballast resistor.
10. Dress ON-OFF switch leads clear of switch actuating lever and shutter.
11. Dress 1st a.f. grid resistor (R11) close to chassis.
12. Dress capacitor C4 in air between end apron and r.f. coil and away from selenium rectifier, with foil end to tuning condenser frame.

Power Line Operation.—

A power cord is stored in the fiber tube which is clamped above the chassis inside the cabinet. To open the cabinet, push the wire latch on the bottom of the case to the right, and lift the back cover up and off. Then pull the power cord plug out of the socket on the top of the chassis as shown, and take out and unroll the power cord. A slot in the bottom of the cabinet allows the closing of the cabinet with the power cord passing through. Replace the back cover with the cord extending through the slot and insert the plug into a convenient electrical outlet.

When returning to battery operation, be sure to replace the power plug in its socket inside the case with the cord stored in the fiber tube.

NOTE: If reception is not obtained on DC, reverse plug in outlet receptacle. This may also reduce hum on AC operation.

To Replace Top Cover:

Assemble handle to cover and case front but do not tighten screws (small). Replace and tighten chassis mounting screws (large). Tighten the screws holding handle to top cover and case front.

Alignment Procedure

Output Meter Alignment.—If this method is used, connect the meter across the voice coil and turn the receiver volume control to maximum.

Test Oscillator.—For all alignment operations, connect the low side of the test oscillator to the receiver chassis and keep the oscillator output as low as possible to avoid AVC action.

With the gang at full mesh set the dial pointer so that the pointer is ¼" to the left of the 55 calibration on the dial scale.

Calibration Scale.—The calibrated dial scale is attached to the chassis. It can be used directly as a reference for alignment.

Battery operation of the receiver is preferable during alignment; on AC operation an isolation transformer (117v./117v.) may be necessary for the receiver if the test oscillator is also AC operated.

ALIGNMENT CHART

Order Of Alignment		TEST OSCILLATOR				RECEIVER				
		Connect "HI" Side to	Connect "LO" Side to	Dummy Antenna	Frequency Setting	Range Selector	Dial Setting	Circuit to Adjust	Adjustment Symbols	Notes
I.F. Alignment	1	C-M9 Gang	GND	39MMF	455KC		"HI" End	1st.&2nd. I.F. Trans.	T-1 & T-2 Top & Bottom	Max. Out.
	2	Radiate Signal			1600KC		1600KC	Osc.	C-11 Trimmer	Max. Out.
R.F. Alignment	3	Same			1400KC		1400KC	R.F. Ant.	C-1 & C-10 Trimmer	Max. Out.
	4	Same			600KC		600KC	R.F. Osc.	L-3 & L-4 Rock Gang	Max. Out.
	5	Repeat steps 2, 3 and 4.								

REPLACEMENT PARTS FOR MODEL BP6D

Insist on Genuine Factory Tested Parts, which are readily identified and may be purchased from Authorized Dealers.

STOCK NO.	DESCRIPTION
	CHASSIS ASSEMBLY
S-5591	Capacitor-Trimmer 3-35 Mmf.(C-1)
71924	Capacitor-Ceramic 56 MMF. (C-8)
71514	Capacitor-Ceramic 82 MMF. (C-2,C-21)
*73922	Capacitor-Ceramic 270 MMF.(C-26)
	Capacitor-Paper .002 Mfd.200 volts(C-27)
	Capacitor-Paper .0025 Mfd.400 volts(C-23)
	Capacitor-Paper .003 Mfd.200 volts(C-15)
	Capacitor-Paper .005 Mfd.400 volts(C-28)
	Capacitor-Paper .01 Mfd.200 volts(C22, C-25)
-	Capacitor-Paper .02 Mfd.200 volts(C-24)
	Capacitor-Paper .047 Mfd.400 volts(C30)
	Capacitor-Paper .05 Mfd.200 volts(C-5, C-16,C-20)
	Capacitor-Paper .05 Mfd.400 v.(C-4,C-6, C-33)
	Capacitor-Paper .1 Mfd.400 v.(C-31)
73113	Capacitor-Electrolytic 50 Mfd.150 volts (C-29A)
	Capacitor-Electrolytic 20 Mfd.150 volts (C-29B)
	Capacitor-Electrolytic 160 Mfd.25 volts (C-29C)
	Capacitor-Electrolytic 40 Mfd. 25 volts (C29D)
*S-5696	Capacitor-Variable capacitor complete with drum (C-3,C-9,C-10,C-11,C-12)
S-5588	Coil-Oscillator coil (L-4,L-5)
S-5589	Coil-R.F. Coil (L-2,L-3)
71041	Connector-Male connector for battery cable
71057	Control-Volume control (R-9)
	Resistor- 33 ohms 150 M.A. (R-3)
	Resistor-1,000 ohms 1/2 watt (R-21)
	Resistor-1,500 ohms 1/2 watt (R-16)
	Resistor-1,800 ohms 1/2 watt (R-6,R-15)
	Resistor-2,700 ohms 1/2 watt (R-19)
*74993	Resistor-2,700 ohms 10 watts (R-17)
	Resistor-3,300 ohms 1 watt (R-18)
	Resistor-15,000 ohms 1/2 watt(R-20)
	Resistor-27,000 ohms 1/2 watt(R-10)
	Resistor-68,000 ohms 1/2 watt(R-8)
	Resistor-100,000 ohms 1/2 watt(R-4)
	Resistor-220,000 ohms 1/2 watt(R-13)
	Resistor-330,000 ohms 1/2 watt(R-22)
	Resistor-1 Megohm 1/2 watt (R14)
	Resistor-1.8 Megohm 1/2 watt (R-2)
	Resistor-3.3 Megohm 1/2 watt (R-7)
	Resistor-4.7 Megohm 1/2 watt (R-12)
	Resistor-5.6 Megohm 1/2 watt (R-5)
	Resistor-6.8 Megohm 1/2 watt (R-1)
	Resistor-10 Megohm 1/2 watt (R-11)
74322	Rectifier-Selenium rectifier
*73122	Shaft-Tuning knob shaft
71039	Switch-"Line Battery" change switch S1
71045	Switch-Power switch S-2
73129	Transformer-1st I.F.transformer T1
S-5587	Transformer-2nd I.F.transformer T2

STOCK NO.	DESCRIPTION
	SPEAKER ASSEMBLY
S-5575	Cone-Cone & Voice coil assy.
S-3583	Output transformer
S-5916	Speaker complete
	MISCELLANEOUS ASSEMBLIES
71074	Arm-shutter arm lever
S-5584	Back-case back complete with latch
*71044	Bracket-Power switch bracket less switch
71073	Bracket-Bearing bracket for shutter arm lever
*74995	Bracket-Drive cord pulley bracket complete with two pulleys
71070	Bracket-Mounting bracket for S-5591 trimmer capacitor
*75001	Clip-Clip to hold battery (2 req'd.)
*75005	Clip-"C" clip (threaded) for battery hold clip (2 req'd.)
*75009	Clip-Clip to hold chassis to case (2 req'd.)
*75010	Clip-"C" clip and screw for fastening case front (4 req'd.)
*71080	Clip-Case side spring clip and screw (2 req'd.)
*75013	Clip-Spring clip with tab for fastening case front to case sides (4 req'd.)
S-5592	Dial-Dial scale and window assy.
S-5731	Emblem-"RCA Victor" Emblem
S-5581	Front-Case front complete with insulating strip & support feet-less shutter
*74838	Grommet-Power cord strain relief grommets (1 set)
*72283	Grommet-Rubber grommets to mount tuning capacitor
S-5585	Handle-Carrying handle assembly
*71031	Holder-Power cord holder
S-5586	Indicator-Station selector indicator
*74994	Knob-Tuning or volume control knob
*18469	Plate-Bakelite mounting plate for electrolytic capacitor
*75000	Plate-Case top plate-less handle
*75017	Plate-Mounting plate for carrying handle (2 req'd.)
*72602	Pulley-Drive cord pulley
*75015	Pin-Pivot pin for case shutter
*71071	Shutter-Case shutter
*S-5582	Side-Case side assembly R.H.
*S-5583	Side-case side assembly L.H.
*71072	Spring-case shutter compression spring
*75008	Support-Moulded support foor for case (2 req'd.)
*74353	Washer-Spring washer for shutter shafts
	* Indicates New Stock Item.

Only items listed under stock numbers are available as Replacement Parts.

All parts subject to change or withdrawal without notice.

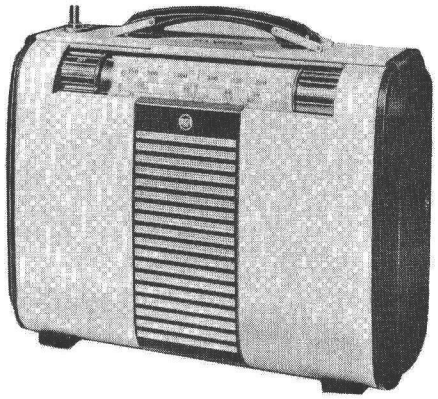

MODEL BP6X

RCA VICTOR

"HIS MASTER'S VOICE"

AC-DC—Battery Portable Radio

MODEL BP6X

SERVICE DATA

— 1949 NO. 17 —

GENERAL SERVICE DIVISION
RCA VICTOR COMPANY LIMITED
MONTREAL, QUE.

Electrical and Mechanical Specifications

Tuning Ranges

Standard Broadcast ("A" Band)_____535-1610 kc. (560-186 m.)
Medium Wave ("B" Band) _____2.3-7 mc. (131-42.8 m.)
Short Wave ("C" Band) _____7-22 mc. (42.8-13.7 m.)
Intermediate Frequency _____455 kc.

Tube Complement

(1) RCA 1T4 _____R.F. Amplifier
(2) RCA 1A7GT _____Converter
(3) RCA 1T4 _____I.F. Amplifier
(4) RCA 1U5 _____Det.-A.V.C.-A.F. Amp.
(5) RCA 3V4 _____Output

A selenium rectifier is used.

Power Supply Ratings

Power Line Operation _____105-125v. d.c. or 25 to 60 cycles a.c.
Power consumption _____117v. d.c.—7 watts, 117v. a.c.—11 watts

NOTE: If reception is not obtained on d.c., reverse the plug in the outlet receptacle.

Battery Operation

Battery pack _____Eveready 753

The power cord plug must be inserted into the socket provided on the top of the chassis.
Current consumption _____"A" (9v.) 50 ma., "B" (90v.) 14.5 ma.

Power Output

Undistorted _____150 milliwatts
Maximum _____275 milliwatts

Loudspeaker

Size and type _____4" x 6" P.M. dynamic
Voice coil impedance _____3.2 ohms at 400 cycles

Dimensions

Height_____13¼" Width_____9½" Depth_____5½"

Weight _____9 lbs. (without battery)

Antennas

Under normal conditions the built-in antennas will give satisfactory service. If the receiver is used in a shielded location such as an automobile, airplane or railway train, an RCA VICTOR EXTERNAL LOOP ANTENNA (Stock No. 71616) may be used for improved performance on "A" band.

An external antenna and ground may be connected to the ANT and GND terminal screws at the end of the chassis. This may improve reception on all bands.

For improved short wave reception on battery operation, the metal ground plate should be removed from the case and placed on the ground. Its connecting wire should be attached to the GND terminal screw.

The telescoping rod antenna should be extended to its full height for good short wave reception.

Insulating Washers

The dial support and base holder brackets are insulated from the chassis with insulating washers. This serves to insulate the case from the chassis. In servicing make certain that these washers are in place and properly positioned.

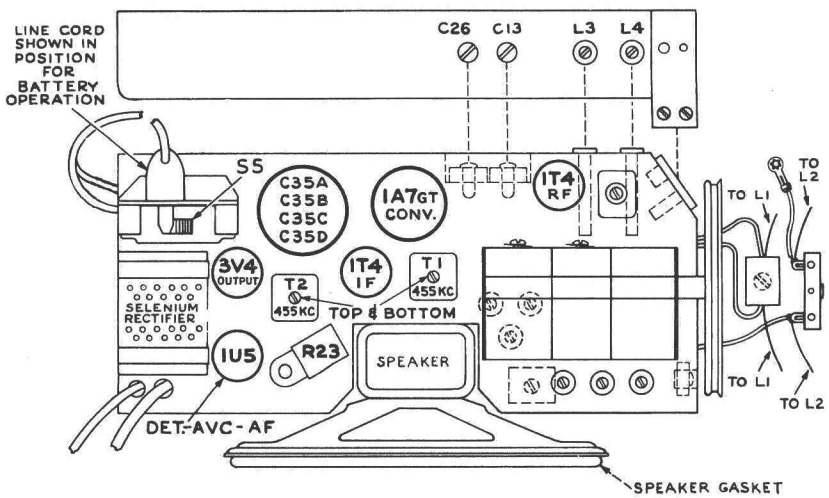

FIG. 1—CHASSIS LAYOUT

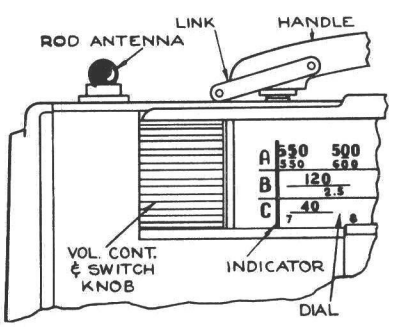

FIG. 2—DIAL INDICATOR POSITION

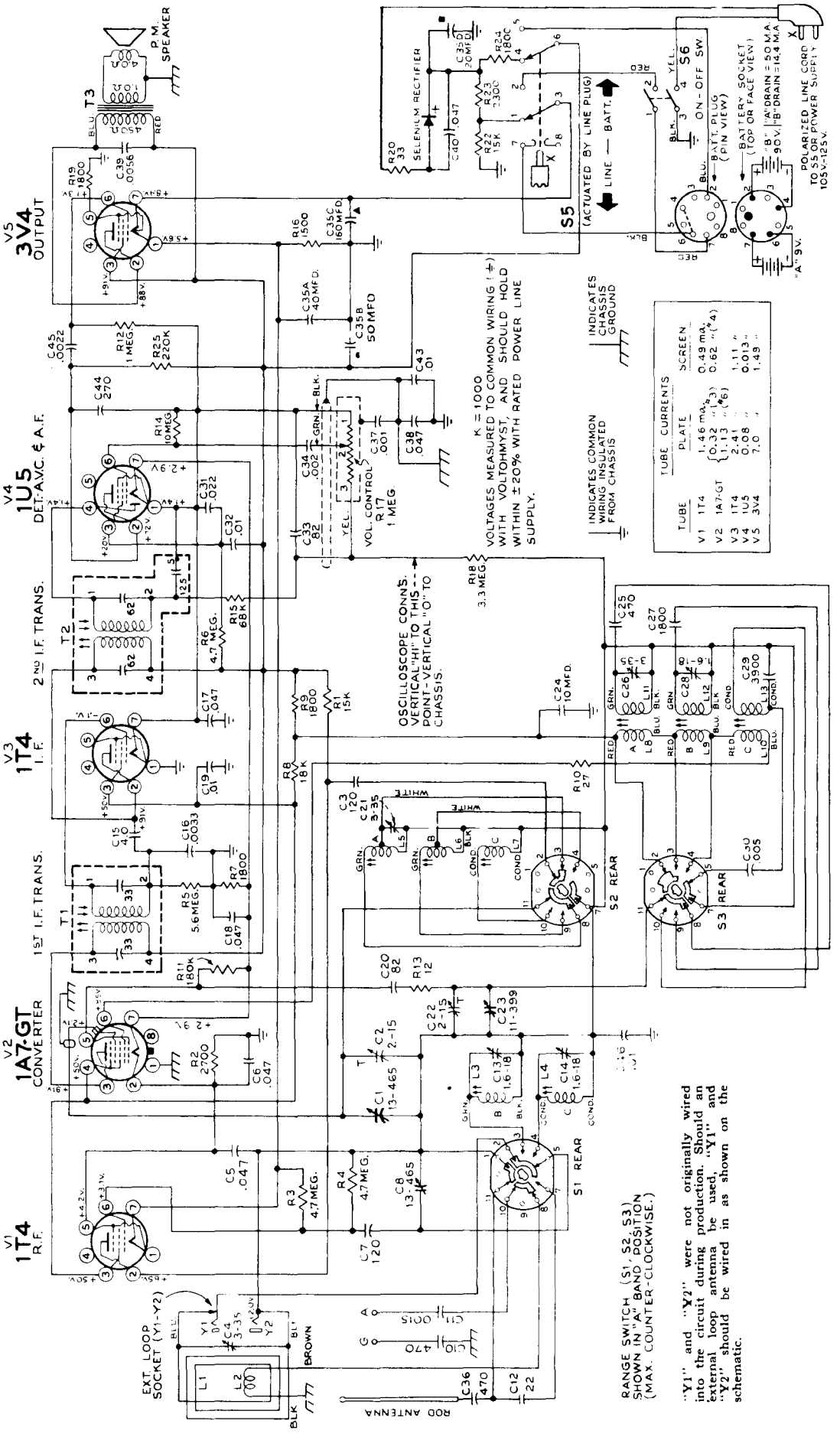

FIG. 3—SCHEMATIC DIAGRAM

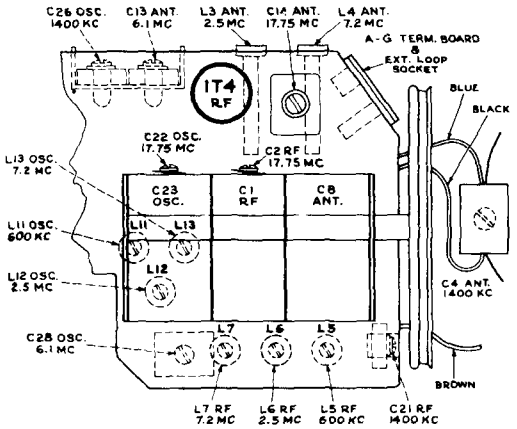

FIG. 4—ALIGNMENT ADJUSTMENTS

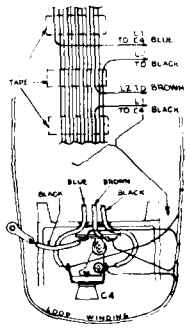

FIG. 5—LOOP ANTENNA CONNECTIONS

Critical Lead Dress

1. Dress all filament leads close to chassis.
2. Dress 33 ohm fuse resistor up and away from all wiring.
3. Dress C40 close to side apron.
4. Keep R14 leads as short as possible and dress close to 1U5 socket.
5. Dress R24 up and away from chassis.
6. Dress R23 leads under bus wire that runs between terminal #3 of 2nd IF and pin #2 of 1T4 (IF).
7. Dress C45 against chassis.
8. Keep bus leads on C43 and C38 as short as possible.
9. Dress neutralizing capacitor C15 against chassis.
10. Dress C34 against chassis and keep leads as short as possible.
11. Dress C46 leads up and away from IF transformer and keep leads as short as possible.
12. Keep leads on R5 and C16 as short as possible.
13. Keep bus leads on C20 and R13 as short as possible and dress midway between chassis and bottom pan, center R13 bus in chassis hole.
14. Dress "C" oscillator coil lead to S3-10 up and away from chassis base.
15. Dress all leads away from "C" oscillator coil.
16. Dress C27 under "B" oscillator trimmer and edge-wise to chassis base.
17. Dress R1 and C3 close to chassis base and away from R.F. grid.
18. Dress "C" R.F. coil lead to S2-10 up and away from chassis base.
19. Keep leads on R11 as short as possible and dress close to 1A7 socket.
20. Dress C12 close to range switch wafer.
21. Keep 1A7 I.F. plate lead away from terminal #1 of 1st IF transformer.
22. Dress white leads of "A" and "B" R.F. coils under bus wire to S2-7 and dress close to range switch wafer.
23. Dress C11 away from range switch shaft.
24. Dress filament leads to R.F. tube between back apron and 1A7 socket.
25. Dress R3, R4 close to chassis base.
26. Dress C7 away from RF section of range switch and midway between antenna coils and bottom pan.
27. Keep leads to 1st audio plate as short as possible.
28. Dress wiring near external loop socket to clear external loop pins.
29. Dress loop lead away from tuning drum and battery.
30. Dress leads to S1-3 away from R.F. range switch wafer.
31. Dress "B" R.F. coil leads close to coil.

Alignment Procedure

Cathode-Ray Alignment is the preferable method. Connections for the oscilloscope are shown in the Schematic Diagram.

Output Meter Alignment—If this method is used, connect the meter across the voice coil, and turn the receiver volume control to maximum.

Test-Oscillator—For all alignment operations, connect the low side of the test-oscillator to the receiver chassis, and keep the oscillator output low to avoid a-v-c action.

NOTE—If the test-oscillator is also a.c. operated it may be necessary to use an isolation transformer for the receiver during alignment and to connect the low side of the test oscillator to common wiring—reversal of the plug may reduce hum.

Dial Indicator—With tuning condenser in full mesh, the indicator should be set to the position shown in the illustration "Dial Indicator Position."

ALIGNMENT CHART

ORDER OF ALIGNMENT		TEST OSCILLATOR				RECEIVER				
		CONNECT "HI" SIDE TO	CONNECT "LO" SIDE TO	DUMMY ANTENNA	FREQUENCY SETTING	RANGE SELECTOR	DIAL SETTING	CIRCUIT TO ADJUST	ADJUSTMENT SYMBOLS	NOTES
I.F. ALIGNMENT	1	1T4(V-3) Grid, Pin #6	Gnd.	.01 Mfd.	455 Kc	"A" Band	"HI" End	2nd I.F. Trans.	T-2 Top & Bottom Cores	Max. Output
	2	1A7-GT(V-2) Grid Cap	Same	Same	Same	Same	Same	1st I.F. Trans.	T-1 Top & Bottom Cores	Same
	3	Repeat Steps 1 & 2.								
"C" Band ALIGNMENT	4	To Rod Ant. Lead	Gnd.	22 Ohms In Series with 33 mmf	17.75 Mc	"C" Band	17.75 Mc	Osc. R.F. Ant.	C-22 C-2 C-14*	Same
	5	Same	Same	Same	7.2 Mc	Same	7.2 Mc	Osc. R.F. Ant.	L-13 L-7 L-4	Same
	6	Repeat Steps 4 & 5.								
"B" Band ALIGNMENT	7	To Rod Antenna	Gnd.	22 Ohms In Series with 33 mmf	6.1 Mc	"B" Band	6.1 Mc	Osc. Ant.	C-28 C-13	Same
	8	Same	Same	Same	2.5 Mc	Same	2.5 Mc	Osc. R.F. Ant.	L-12 L-6 L-3	Same
	9	Repeat Steps 7 & 8								
"A" Band ALIGNMENT	10	Blue Lead on Loop Ant.	Gnd.	.01 Mfd.	1400 Kc	"A" Band	1400 Kc	Osc. R.F.	C-26 C-21	Same
	11	Same	Same	Same	600 Kc	Same	600 Kc	Osc. R.F.	L-11 L-5	Same
	12	Repeat Steps 10 & 11.								
	13	Assemble receiver, connect loop ant. leads, install rod antenna, connect blue rod ant. lead to C-36. Install and connect battery.								
	14	Radiate Signal			1400 Kc	"A" Band	1400 Kc	Loop	C-4	Same
	15	Same			17.75 Mc	"C" Band	17.75 Mc	Ant.*	†C-14	Same
	16	Same			6.1 Mc	"B" Band	6.1 Mc	Ant.	†C-13	Same

* *Rock gang, use maximum capacity peak.*

† Extend rod antenna to full height. Oscillator tracks above signal on all bands.

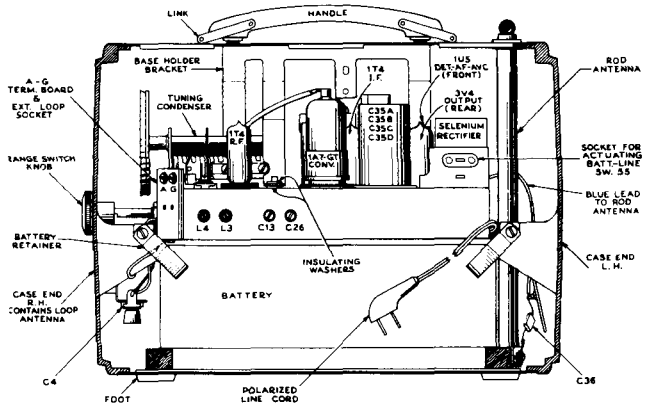

FIG. 6—ASSEMBLY BACK VIEW

To Remove Chassis

1. Disconnect and remove battery.
2. Disconnect loop antenna leads.
3. Disconnect rod antenna lead from C36.
4. Disconnect C36 from rod antenna.
5. Remove rod antenna through top of case.
6. Remove range switch knob.
7. Remove the two screws holding chassis to case ends.
8. Remove two screws (under carrying handle) holding base holder bracket to top of case.

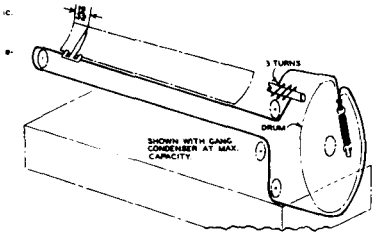

FIG. 7—DIAL CORD STRINGING

REPLACEMENT PARTS FOR MODEL BP6X

Insist on genuine factory tested parts, which are readily identified and may be purchased from authorized dealers.

Stock No.	Description	List Price
	CHASSIS ASSEMBLY	
S-5124	Capacitor - Mica trimmer 1.6 - 18 MMF (C14)....	
S-5125	" - " " " " and 3-35 MMF. (C-13, C-26).....	
S-5126	" - Mica trimmer 3-35 MMF (C-21).....	
S-5127	" - " " 1.6-18 MMF. (C-28)....	
S-5128	" - Ceramic, 4 MMF. (C-15).....	
S-5129	" - " 22 MMF. (C-12).....	
S-5130	" - " 82 MMF. (C-20, C-33).....	
S-5131	" - " 120 MMF. (C-3, C-7).....	
S-5132	" - " 270 MMF. (C-44).....	
S-5133	" - Mica 470 MMF. (C-10, C-37).....	
	" - Tubular, .001 Mfd. 600 V. (C-37)..	
	" - Ceramic, .0015 Mfd. (C-11).....	
S-5136	" - Mica, 1800 MMF. (C-27).....	
S-5137	" - Molded, 2000 MMF. 200 V. (C-34)....	
	" - Tubular, .0022 MMF. 600 V. (C-45)	
	" - " .0033 MMF. 600 V. (C-16)	
S-5139	" - Mica, 3900 MMF. (C-29).....	
	" - Molded, .005 MFD., 200 V. (C-30)..	
	" - Tubular, .0056 MMF. 400 V. (C-39)	
	" - Ceramic, .01 MFD. (C-19, C-32, C-43, C-46).....	
	" - Tubular, .022 MFD., 400 V. (C-31)	
	" - " .047 MFD., 400 V. (C-5,C-6,C-17,C-18).....	
	" - Tubular, .047 MFD., 600 V., (C-38, C-40).....	
S-5145	" - Electrolytic, 10 MFD., 150 V. (C-24).....	
S-5146	" - Electrolytic, 40 MFD., 25 V. (C-35A).....	
	50 MFD. 150 V.(C-35B)	
	160 MFD. 25 V.(C-35C)	
	20 MFD. 150 V.(C-35D)	
S-5221	Coil - "A" osc. coil with core (L-8, L-11).....	
S-5222	Coil - "B" osc. coil with core (L-9, L-12).....	
S-5223	Coil - "C" osc. coil with core (L-10, L-13)....	
S-5224	Coil - "A" R.F. coil with core (L-5).....	
S-5225	Coil - "B" R.F. coil with core (L-6).....	
S-5226	Coil - "C" R.F. coil with core (L-7).....	
S-5227	Coil - "B" ant. coil with core (L-3).....	
S-5228	Coil - "C" ant. coil with core (L-4).....	
S-5147	Condenser - Variable tuning condenser (C-1, C-2,C-8,C-22,C-23).....	
S-5148	Control - Volume control & power switch (R-17, S-6).....	
S-5149	Cord - Power cord.....	
S-4829	Rectifier - Selenium rectifier	
	Resistor - 12 ohms 1/2 w. (R-13).....	
	" - 27 " 1/2 w. (R-10).....	
	" - 33 " 1 w. (R-20).....	
	" - 1500 ohms 1/2 w. (R-16).....	
	" - 1800 " 1/2 w. (R-7, R-9, R-19)..	
	" - 1800 " 1 w. (R-24).....	
S-5166	" - 2300 " 6 w. (R-23).....	
	" - 2700 " 1/2 w. (R-2).....	
	" - 15000 " 1/2 w. (R-1).....	
	" - 15000 " 1/2 w. (R-22).....	
	" - 18000 " 1/2 w. (R-8).....	
	Resistor - 68000 " 1/2 w. (R-15).....	
	" - 180000 " 1/2 w. (R-11).....	
	" - 220000 " 1/2 w. (R-25).....	
	" - 1 Megohn 1/2 w. (R-12).....	
	" - 3.3 " 1/2 w. (R-18).....	
	" - 4.7 " 1/2 w. (R-3,R-4,R-6).....	
	" - 5.6 " 1/2 w. (R-5).....	
	" - 10 " 1/2 w. (R-14).....	
S-5186	Switch - Line-Batt. change switch & bracket (S-5).....	
S-5187	Switch - Range switch (S-1, S-2).....	
S-5229	Transformer - First I.F. trans. (T-1).....	
S-5230	" - Second I.F. trans. (T-2).....	
S-5231	" - Output trans. (T-3).....	
	SPEAKER ASSEMBLY	
S-5315	Cone - cone & voice coil assembly.....	
	MISCELLANEOUS ASSEMBLY	
S-5193	Antenna - telescopic rod antenna.....	
S-5194	Arm - shutter arm lever.....	
S-5195	Back - case back and top cover - less rear feet.....	
S-5196	Bracket - bearing bracket for shutter arm lever.....	
S-5197	Capacitor - Mica trimmer 3-35 MMF. (C-4).....	
S-5198	Clip - spring clip for case ends (2 required)	
S-4313	Cord - dial drive cord	
S-5150	Dial - dial scale and window assembly.....	
S-5151	Drive - Vernier drive assembly with tuning knob shaft.....	
S-5199	End - case end - R.H. - with trimmer capacitor & spring clip less loop.....	
S-5200	End - case end - L.H.....	
S-5201	Foot - case foot - front (2 required).....	
S-5202	Foot - case foot - rear (2 required).....	
S-5203	Front - case front complete with feet, less shutter.....	
S-5205	Handle - carrying handle.....	
S-5153	Indicator - station selector indicator.....	
S-5206	Link - carrying handle link consisting of two links, two shafts and four drive screws (2 required).....	
S-5155	Knob - tuning knob with retaining spring.....	
S-5156	Knob - Volume control & power switch knob with retaining spring.....	
S-5207	Knob - range switch knob.....	
S-5209	Loop - loop antenna (L-1, L-2).....	
S-5216	Screw - complete set of screws, nuts and washers to fasten front to case ends.....	
S-5217	Shutter - case shutter.....	
S-5218	Spring - case shutter compression spring.....	
S-5219	Washer - "C" washer for shutter shafts (2 required).....	
S-5220	Washer - Dampening washer for shutter shafts (2 required).....	

Only items listed under stock numbers are available as Replacement Parts.
All parts and prices subject to change or withdrawal without notice.



RCA VICTOR

"HIS MASTER'S VOICE"

AC-DC—Battery Portable Radio

MODEL BP6DX

SERVICE DATA

— 1951 NO. 1 —

GENERAL SERVICE DIVISION
RCA VICTOR COMPANY LIMITED
MONTREAL, QUE.

MODEL BP6DX

Electrical and Mechanical Specifications

Tuning Ranges

Standard Broadcast ("A" Band)_____535-1610 kc. (560-186 m.)
Medium Wave ("B" Band) _____2.3-7 mc. (131-42.8 m.)
Short Wave ("C" Band) _____7-22 mc. (42.8-13.7 m.)
Intermediate Frequency _____455 kc.

Tube Complement

(1) RCA 1T4 _____R.F. Amplifier
(2) RCA 1A7GT _____Converter
(3) RCA 1T4 _____I.F. Amplifier
(4) RCA 1U5 _____Det.-A.V.C.-A.F. Amp.
(5) RCA 3V4 _____Output

A selenium rectifier is used.

Power Supply Ratings

Power Line Operation _____105-125v. d.c. or 25 to 60 cycles a.c.
Power consumption _____117v. d.c.—7 watts, 117v. a.c.—11 watts

NOTE: If reception is not obtained on d.c., reverse the plug in the outlet receptacle.

Battery Operation

Battery pack _____Eveready 753

The power cord plug must be inserted into the socket provided on the top of the chassis.
Current consumption _____"A" (9v.) 50 ma., "B" (90v.) 14.5 ma.

Power Output

Undistorted _____150 milliwatts
Maximum _____275 milliwatts

Loudspeaker

Size and type _____4" x 6" P.M. dynamic
Voice coil impedance _____3.2 ohms at 400 cycles

Dimensions

Height_____13¼" Width_____9½" Depth_____5½"

Weight _____9 lbs. (without battery)

Antennas

Under normal conditions the built-in antennas will give satisfactory service. If the receiver is used in a shielded location such as an automobile, airplane or railway train, an RCA VICTOR EXTERNAL LOOP ANTENNA (Stock No. 71616) may be used for improved performance on "A" band.

An external antenna and ground may be connected to the ANT and GND terminal screws at the end of the chassis. This may improve reception on all bands.

For improved short wave reception on battery operation, the metal ground plate should be removed from the case and placed on the ground. Its connecting wire should be attached to the GND terminal screw.

The telescoping rod antenna should be extended to its full height for good short wave reception.

Insulating Washers

The dial support and base holder brackets are insulated from the chassis with insulating washers. This serves to insulate the case from the chassis. In servicing make certain that these washers are in place and properly positioned.

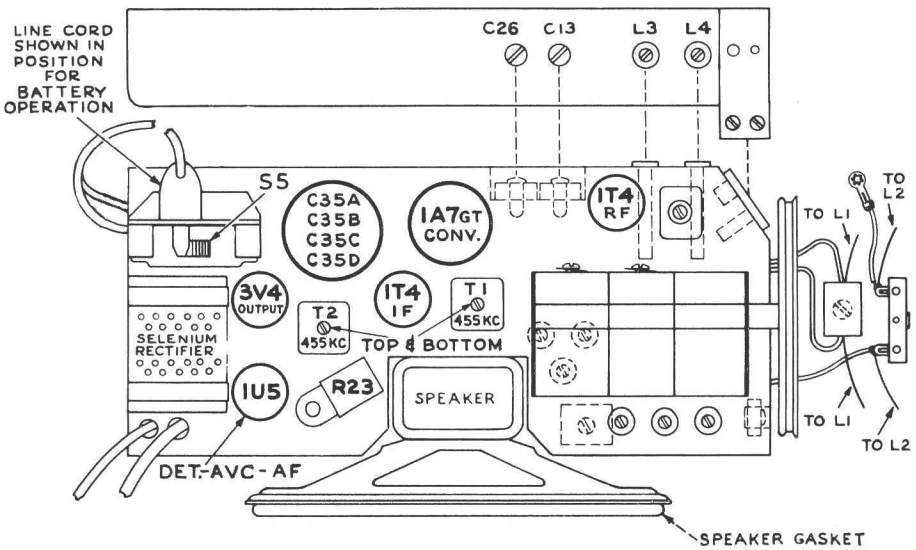

FIG. 1—CHASSIS LAYOUT

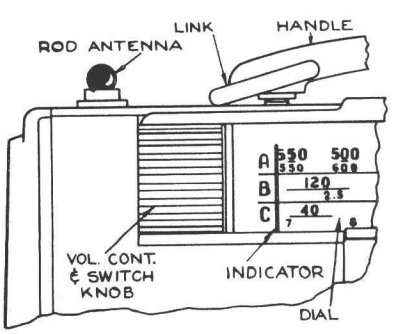

FIG. 2—DIAL INDICATOR POSITION

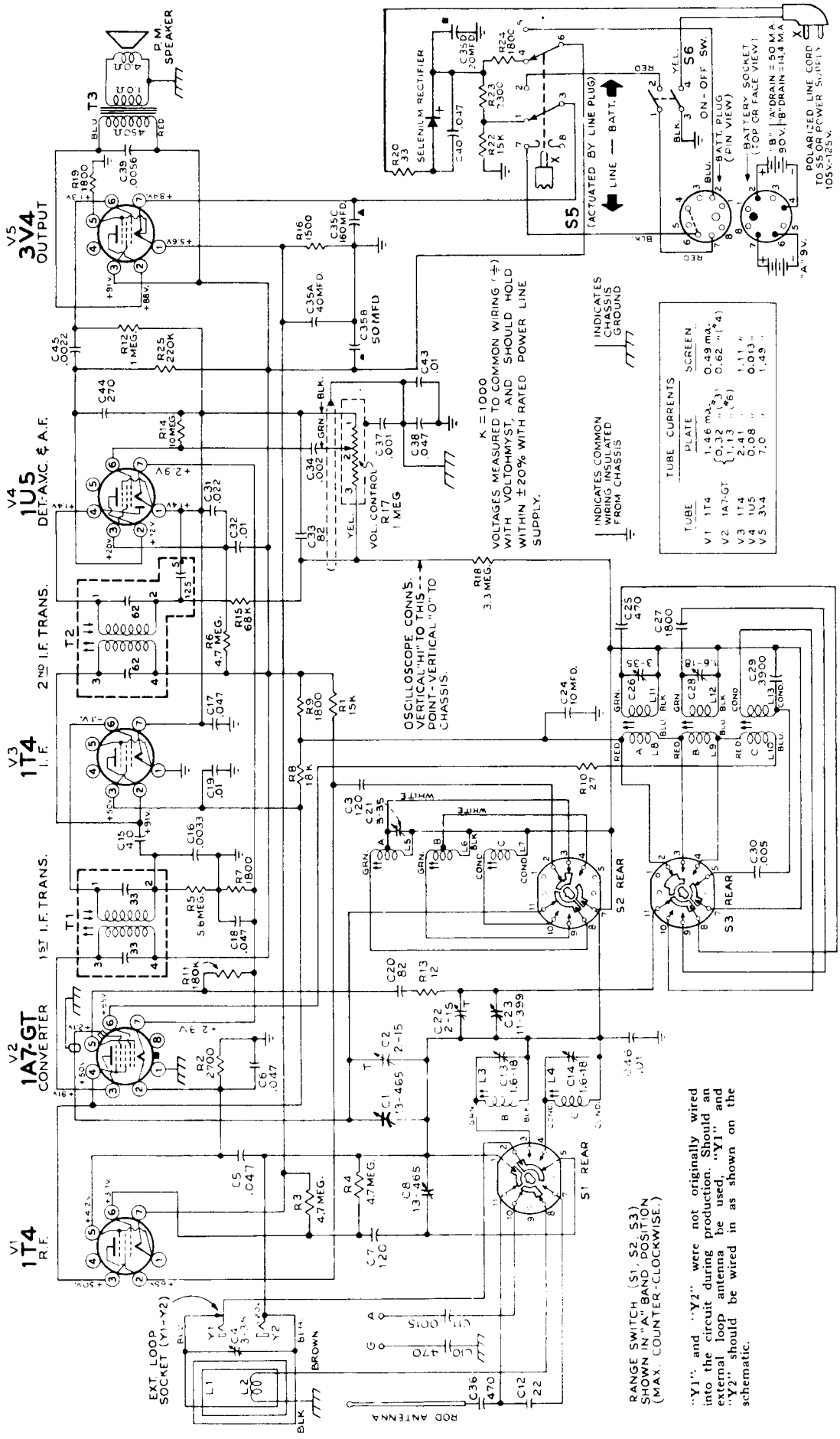

FIG. 3—SCHEMATIC DIAGRAM

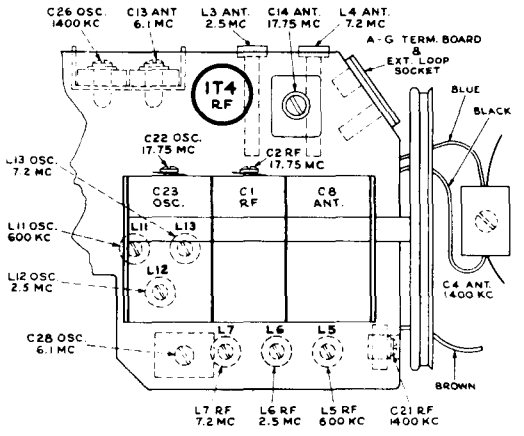

FIG. 4—ALIGNMENT ADJUSTMENTS

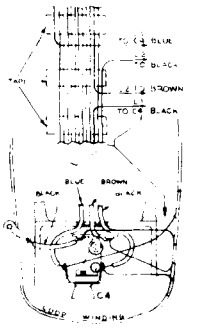

FIG. 5—LOOP ANTENNA CONNECTIONS

Critical Lead Dress

1. Dress all filament leads close to chassis.
2. Dress 33 ohm fuse resistor up and away from all wiring.
3. Dress C40 close to side apron.
4. Keep R14 leads as short as possible and dress close to 1U5 socket.
5. Dress R24 up and away from chassis.
6. Dress R23 leads under bus wire that runs between terminal #3 of 2nd IF and pin #2 of 1T4 (IF).
7. Dress C45 against chassis.
8. Keep bus leads on C43 and C38 as short as possible.
9. Dress neutralizing capacitor C15 against chassis.
10. Dress C34 against chassis and keep leads as short as possible.
11. Dress C46 leads up and away from IF transformer and keep leads as short as possible.
12. Keep leads on R5 and C16 as short as possible.
13. Keep bus leads on C20 and R13 as short as possible and dress midway between chassis and bottom pan, center R13 bus in chassis hole.
14. Dress "C" oscillator coil lead to S3-10 up and away from chassis base.
15. Dress all leads away from "C" oscillator coil.
16. Dress C27 under "B" oscillator trimmer and edge-wise to chassis base.
17. Dress R1 and C3 close to chassis base and away from R.F. grid.
18. Dress "C" R.F. coil lead to S2-10 up and away from chassis base.
19. Keep leads on R11 as short as possible and dress close to 1A7 socket.
20. Dress C12 close to range switch wafer.
21. Keep 1A7 I.F. plate lead away from terminal #1 of 1st IF transformer.
22. Dress white leads of "A" and "B" R.F. coils under bus wire to S2-7 and dress close to range switch wafer.
23. Dress C11 away from range switch shaft.
24. Dress filament leads to R.F. tube between back apron and 1A7 socket.
25. Dress R3, R4 close to chassis base.
26. Dress C7 away from RF section of range switch and midway between antenna coils and bottom pan.
27. Keep leads to 1st audio plate as short as possible.
28. Dress wiring near external loop socket to clear external loop pins.
29. Dress loop lead away from tuning drum and battery.
30. Dress leads to S1-3 away from R.F. range switch wafer.
31. Dress "B" R.F. coil leads close to coil.

Alignment Procedure

Cathode-Ray Alignment is the preferable method. Connections for the oscilloscope are shown in the Schematic Diagram.

Output Meter Alignment—If this method is used, connect the meter across the voice coil, and turn the receiver volume control to maximum.

Test-Oscillator—For all alignment operations, connect the low side of the test-oscillator to the receiver chassis, and keep the oscillator output low to avoid a-v-c action.

NOTE—If the test-oscillator is also a.c. operated it may be necessary to use an isolation transformer for the receiver during alignment and to connect the low side of the test oscillator to common wiring—reversal of the plug may reduce hum.

Dial Indicator—With tuning condenser in full mesh, the indicator should be set to the position shown in the illustration "Dial Indicator Position."

ALIGNMENT CHART

ORDER OF ALIGNMENT		TEST OSCILLATOR				RECEIVER				
		CONNECT "HI" SIDE TO	CONNECT "LO" SIDE TO	DUMMY ANTENNA	FREQUENCY SETTING	RANGE SELECTOR	DIAL SETTING	CIRCUIT TO ADJUST	ADJUSTMENT SYMBOLS	NOTES
I.F. ALIGNMENT	1	1T4(V-3) Grid, Pin #6	Gnd.	.01 Mfd.	455 Kc	"A" Band	"HI" End	2nd I.F. Trans.	T-2 Top & Bottom Cores	Max. Output
	2	1A7-GT(V-2) Grid Cap	Same	Same	Same	Same	Same	1st I.F. Trans.	T-1 Top & Bottom Cores	Same
	3	Repeat Steps 1 & 2.								
"C" Band ALIGNMENT	4	To Rod Ant. Lead	Gnd.	22 Ohms in Series with 33 mmf	17.75 Mc	"C" Band	17.75 Mc	Osc. R.F. Ant.	C-22 C-2 C-14*	Same
	5	Same	Same	Same	7.2 Mc	Same	7.2 Mc	Osc. R.F. Ant.	L-13 L-7 L-4	Same
	6	Repeat Steps 4 & 5.								
"B" Band ALIGNMENT	7	To Rod Antenna	Gnd.	22 Ohms in Series with 33 mmf	6.1 Mc	"B" Band	6.1 Mc	Osc. Ant.	C-28 C-13	Same
	8	Same	Same	Same	2.5 Mc	Same	2.5 Mc	Osc. R.F. Ant.	L-12 L-6 L-3	Same
	9	Repeat Steps 7 & 8								
"A" Band ALIGNMENT	10	Blue Lead on Loop Ant.	Gnd.	.01 Mfd.	1400 Kc	"A" Band	1400 Kc	Osc. R.F.	C-26 C-21	Same
	11	Same	Same	Same	600 Kc	Same	600 Kc	Osc. R.F.	L-11 L-5	Same
	12	Repeat Steps 10 & 11.								
	13	Assemble receiver, connect loop ant. leads, install rod antenna, connect blue rod ant. lead to C-36. Install and connect battery.								
	14	Radiate Signal			1400 Kc	"A" Band	1400 Kc	Loop	C-4	Same
	15	Same			17.75 Mc	"C" Band	17.75 Mc	Ant.*	†C-14	Same
	16	Same			6.1 Mc	"B" Band	6.1 Mc	Ant.	†C-13	Same

* Rock gang, use maximum capacity peak.

† Extend rod antenna to full height. Oscillator tracks above signal on all bands.

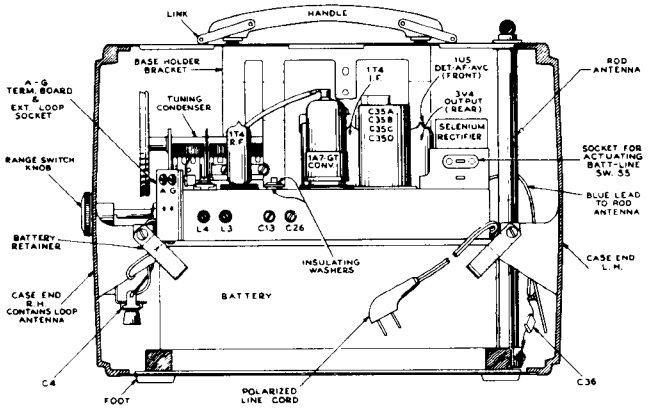

FIG. 6—ASSEMBLY BACK VIEW

To Remove Chassis

1. Disconnect and remove battery.
2. Disconnect loop antenna leads.
3. Disconnect rod antenna lead from C36.
4. Disconnect C36 from rod antenna.
5. Remove rod antenna through top of case.
6. Remove range switch knob.
7. Remove the two screws holding chassis to case ends.
8. Remove two screws (under carrying handle) holding base holder bracket to top of case.

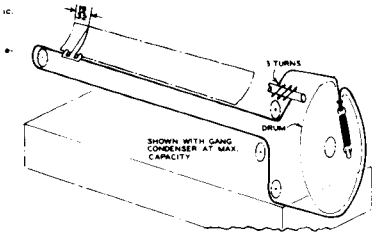

FIG. 7—DIAL CORD STRINGING

REPLACEMENT PARTS FOR MODEL BP6DX

Insist on genuine factory tested parts, which are readily identified and may be purchased from authorized dealers.

STOCK NO.	DESCRIPTION
	CHASSIS ASSEMBLY
*S-5124	Capacitor-Mica Trimmer 1.6-18 MMF(C14)
*S-5125	" -Mica Trimmer 1.6-18 MMF(C13,C20)
*S-5126	" -Mica Trimmer 3-35 MMF (C21)
*S-5127	" -Mica Trimmer 1.6-18 MMF (C28)
*S-5128	" -Ceramic,4 MMF (C15)
*S-5129	" - " 22 MMF(C12)
*S-5130	" - " 82 MMF(C20,C33)
*S-5131	" - " 120 MMF(C3,C7)
*S-5132	" - " 270 MMF(C44)
*S-5133	" - Mica 470 MMF(C10,C36)
	" -Tubular,.001 mfd.600v.(C37)
	" -Ceramic,.0015mfd. (C11)
*S-5136	" -Mica, 1800 MMF (C27)
*S-5137	" -Molded,2000 MMF 200v. (C34)
*S-5139	" -Mica, 3900 MMF (C29)
	" -Tubular,.0022 MMF 600v. (C45)
	" - " .0033 MMF 600v. (C16)
	" -Molded, .005 mfd. 200v. (C30)
	" -Tubular,.0056 mfd.400v. (C39)
	" -Ceramic,.01 mfd.(C19,C32,C43, C46)
	" -Tubular,.022 mfd.400 V.(C31)
	" -Tubular,.047 mfd.400 V.(C5,C6, C17,C18)
	" -Tubular .047 mfd. 600 v.(C38,C40)
*S-5145	" -Electrolytic,10 mfd. 150V.(C24)
*S-5146	" -Electrolytic,40 mfd. 25V.(35A)
	50 mfd. 150V.(C35B)
	160 mfd. 25V.(C35C)
	20 mfd. 150V.(C35D)
*S-5221	Coil-"A" Oscillator coil with core(L8,L11)
*S-5222	" -"B" Osc.Coil with core (L9,L12)
*S-5223	" -"C" " " " " (L10,L13)
*S-5224	" -"A" R.F. coil,with core (L5)
*S-5225	" -"B" R.F. coil, " " (L6)
*S-5226	" -"C" R.F. " " " (L7)
*S-5227	" -"B" Ant.coil " " (L3)
*S-5228	" -"C" " " " " (L4)
*S-6061	Condenser-Var.Tuning condenser, (C1,C2,C8,C22,C23)
*S-5148	Control-Volume control & power switch (R17,S6)
*S-5149	Cord-Power cord
*S-4829	Rectifier-Selenium rectifier
	Resistor-12 ohms 1/2 W. (R13)
	" 27 " 1/2 W. (R10)
	" 33 " 1 W. (R20)
	" 1500 " 1/2 W. (R16)
	" 1800 " 1/2 W. (R7,R9,R19)
	" 1800 " 1 W. (R24)

STOCK NO.	DESCRIPTION
	CHASSIS ASSEMBLY (Cont'd.)
*S-5166	Resistor-2300 ohms 6 W. (R23)
	" -2700 " 1/2 W. (R2)
	" -12,000 ohms, 1/2 W.(R1,R22)
	" -18,000 " , 1/2 W. (R8)
	" -68,000 " , 1/2 W. (R15)
	" -180,000 " , 1/2 W. (R11)
	" -220,000 " , 1/2 W. (R25)
	" -1 Megohms, 1/2 W. (R12)
	" -3.3 " " (R18)
	" -4.7 " " (R3,R4,R6)
	" -5.6 " " (R5)
	" -10.0 " " (R14)
*S-5186	Switch-Line Batt.Change switch &Bracket
*S-5187	" -Range switch (S1,S2)
*S-5229	Transformer-First I.F. Transf.(T1)
*S-5230	" -2nd " " (T2)
*S-3583	" -Output Transformer
	SPEAKER ASSEMBLY
*S-5192	Speaker
*S-5315	Cone-Cone & Voice Coil Assy.
	MISCELLANEOUS ASSEMBLIES
*S-5193	Antenna-Telescopic Rod antenna
*S-5194	Arm-Shutter arm lever
*S-5584	Back-Cabinet back
*S-5196	Bracket-Bearing bracket for shutter arm lever
*S-5197	Capacitor-Mica trimmer (C4)
S-4313	Cord-Dial drive cord
*S-6062	Dial-Dial scale & Window ass'y.
*S-6073	End-case end R.H. with trimmer Capacitor & spring less loop
*S-5981	End-Case end L.H. with antenna mounting assembly
*S-5980	Front-Case front with feet less shutter
*S-5585	Handle-Carrying handle ass'y.
*S-5586	Indicator-Station selector indicator
*74994	Knob-Tuning knob
*S-6063	Knob-Volume control knob
*S-6077	Knob-Range switch knob
*S-5209	Loop-Loop antenna
*S-5217	Shutter-Case shutter
*S-5218	Spring-Case shutter compression spring

*Indicates new Stock Items.

Only items listed under stock numbers are available as Replacement Parts.

All parts subject to change or withdrawal without notice.



MODEL 7Q51

RCA VICTOR

"HIS MASTER'S VOICE"

MODEL 7Q51

SERVICE DATA

— 1949 NO. 4 —

GENERAL SERVICE DIVISION
RCA VICTOR COMPANY LIMITED
MONTREAL, QUE.

Electrical and Mechanical Specifications

Frequency Ranges

Standard Broadcast ("A" Band)	525-1600 kc (571-187 m)
Medium Wave ("B" Band)	2.3-7 mc (130-42.9 m)
Short Wave ("C" Band)	7-22 mc (42.9-13.6 m)
"31-25 Meter" Spread Band	9.5-12 mc (31.6-25m)
"19-16 Meter" Spread Band	15.1-17.9 mc (19.8-16.7 m)
Intermediate Frequency	455 kc

Tube Complement

(1) RCA 6BE6	Converter
(2) RCA 6BA6	I.F. Amplifier
(3) RCA 6SQ7	Det.-A.V.C.-A.F. Amp.
(4) RCA 6F6G	Output
(5) RCA 6F6G	Output
(6) RCA 5Y3GT	Rectifier
(7) RCA 6AT6	Phase Inverter

Loudspeaker

Type	Permanent-Magnet Dynamic
Size	6½ in.
V. C. Impedance	3.2 ohms @ 400 cycles

Power Output

Undistorted	4 watts
Maximum	4.25 watts

Power Supply Ratings

Symbol	Voltage	Frequency	Watts
Rating A	105-125	50-60	60
Rating B	105-125	25-60	60
Rating C	105-125, 210-250	50-60	60

Instruments of Rating C have a switch on the chassis to select 105-125 or 210-250 volt operation (switch marked 117v—235v). (Shipped with switch in 235v position.)

Dial Lamps (2) ..... Mazda No. 44, 6.3 volts, .25 amp.

Cabinet Dimensions

Height	10-13/16 in.
Width	16¼ in.
Depth	8¼ in.
Tuning Drive Ratio	13½ to 1 (6¾ turns of knob)

Description

This instrument is a seven-tube five-band receiver of conventional design with the exception of the spread-band tuning.

A two-section gang condenser one section for antenna and one for oscillator circuit, is used for the A, B, and C bands. The 31-25 Meter and the 19-16 Meter spread bands are tuned by a specially designed permeability tuning system actuated by a cam and rocker assembly which is mechanically fastened to the gang condenser shaft. The core assembly of the permeability tuning system is molded to insure the required tolerances, and tunes both the 31-25 Meter and the 19-16 Meter bands with different circuit constants.

In the 31-25 Meter band position the 31-25 Meter coils (antenna and oscillator) are used. In the 19-16 Meter band position the 31-25 Meter and 19-16 Meter band coils are used in parallel.

The inductances of the A-B-C windings of the multiple antenna coil are all fixed, but the inductances of all other coils in the antenna and oscillator circuits are permeability adjusted. Ungrounded screw-type cores are used for these coils and adjustments are made with a non-metallic screwdriver.

Alignment Procedure

Test-Oscillator.—For all alignment operations, connect the low side of the test-oscillator to the receiver chassis, and keep the oscillator output as low as possible to avoid a-v-c action.

Calibration Scale on Indicator-Drive-Cord Drum.—The tuning dial is fastened in the cabinet and cannot be used for reference during alignment, therefore a calibration scale is attached to the indicator-drive-cord drum which is mounted on the shaft of the gang condenser. The setting of the gang condenser is read on this scale, which is calibrated in degrees.

As the first step in r-f alignment, check the position of the drum. The "180°" mark on the drum scale must be vertical and directly over the center of the gang-condenser shaft when the plates are fully meshed. The drum is held to the shaft by means of two set screws, which must be tightened securely when the drum is in the correct position.

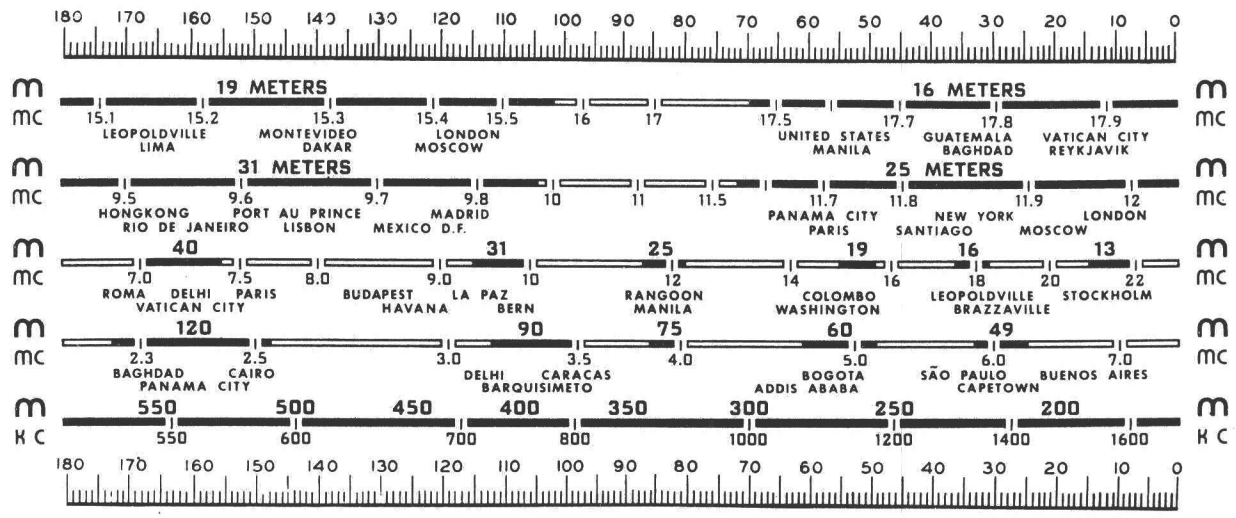

Reduced Reproduction of Receiver Dial and Corresponding 0-180° Calibration Scales

The corresponding position of the dial indicator for any setting of the calibration scale can be determined by drawing a line from this point on the bottom calibration scale to the same point on the top calibration scale For example: 143° on the calibration scale corresponds to approximately 600 kc on "A" band, etc. Read instructions under "Alignment Procedures."

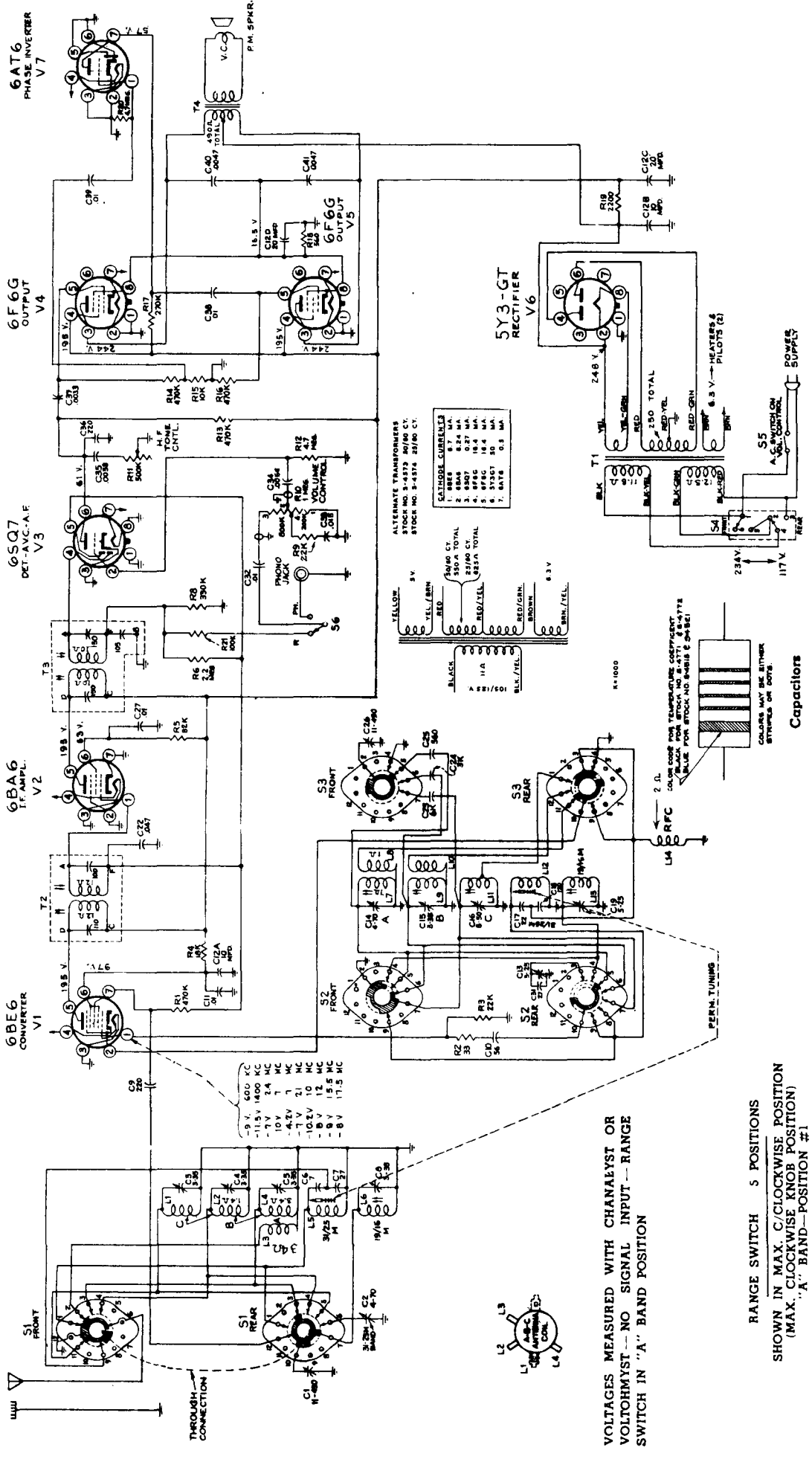

VOLTAGES MEASURED WITH CHANALYST OR VOLTOHMYST — NO SIGNAL INPUT — RANGE SWITCH IN "A" BAND POSITION

RANGE SWITCH 5 POSITIONS

SHOWN IN MAX. C/CLOCKWISE POSITION
(MAX. CLOCKWISE KNOB POSITION)
"A" BAND—POSITION #1

FIG. 1—SCHEMATIC DIAGRAM.

Pointer for Calibration Scale. Improvise a pointer for the calibration scale by fastening a piece of wire to the gang-condenser frame, and bend the wire so that it points to the "180°" mark on the calibration scale when the plates are fully meshed. The correct setting of the gang in degrees, for each alignment frequency, is given in the alignment table.

Receiver Dial with Calibration Scale. –To determine the corresponding frequency for any setting of the calibration scales, refer to the dial with calibration scale drawing.

Dial-Indicator Adjustment.—After fastening the chassis in the cabinet, attach the dial indicator to the drive cable with indicator at the end calibration mark, and gang condenser fully meshed. The indicator has a clip for attachment to the cable.

Spread-Band Alignment.—For spread-band alignment an extremely high degree of accuracy is required of the test-oscillator, as a slight error will produce considerable inaccuracy on the spread-band dials.

Determine the exact dial settings of the test-oscillator (for frequencies at or close to the specified alignment frequencies) by one of the following methods:

1. Zero-beat the test-oscillator against short-wave stations of known frequency.
2. Check test-oscillator signals with a crystal controlled oscillator.

A final check should be made on actual reception of short-wave stations of known frequency.

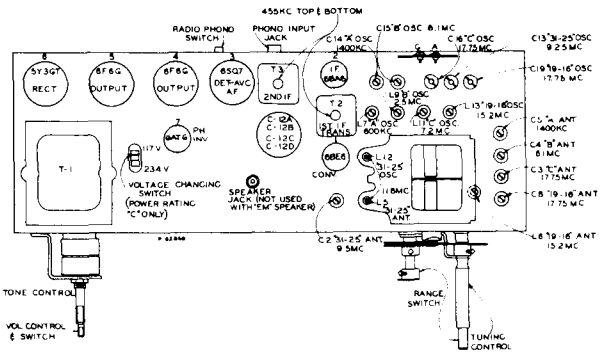

FIG. 3—TUBE AND TRIMMER LOCATION

Critical Lead Dress

1. The 6BA6 screen by-pass capacitor C27 should be dressed close to the chassis with short leads.
2. The grid resistors R12 and R20 should be dressed close to the chassis with short leads.
3. The speaker wires should be dressed as far away from the 6SQ7 and 6AT6 sockets as possible.

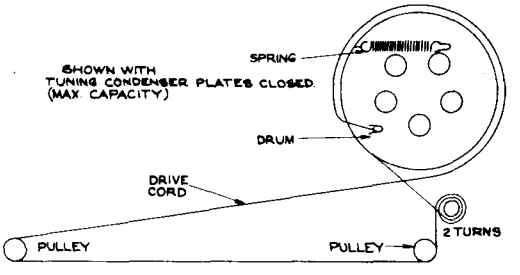

FIG. 2—DIAL CORD STRINGING

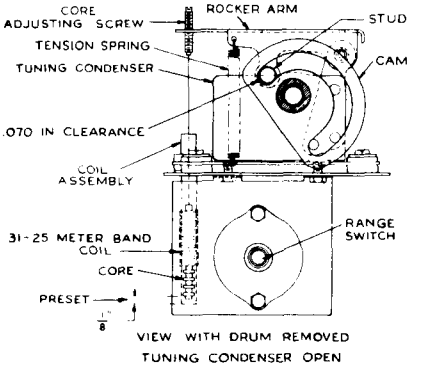

FIG. 4—SPREAD BAND TUNING
(Front view)

ALIGNMENT CHART

Order of Alignment		TEST OSCILLATOR: Connect "HI" Side To	Connect "LO" Side To	Dummy Antenna	Frequency Setting	Range Selector	Receiver Dial Setting	Circuit To Adjust	Adjustment Symbols	Notes
I.F. ALIGNMENT	1	Pin #1 6BA6	Gnd	.01 Mfd	455 Kc	"A" Band	Hi End	2nd I.F. Trans.	T-3 Top & Bottom	Maximum Output
	2	Pin #7 6BE6	"	"	"	"	"	1st I.F. Trans.	T-2 Top & Bottom	" "
"A" BAND ALIGNMENT	3	Ant. Terminal	"	200 MMF	1400 Kc	"	27.3°	Osc. & Ant.	C-14 & C-5	" "
	4	"	"	"	600 Kc	"	142.6°	Osc.	L-7	" "
	5	Repeat Steps 3 and 4.								
"B" BAND ALIGNMENT	6	Ant. Terminal	Gnd	300 Ohm Resistor	6.1 Mc	"B" Band	28.2°	Osc. & Ant.	C-15 & C-4	" "
	7	"	"	"	2.5 Mc	"	148.9°	Osc.	L-9	" "
	8	Repeat Steps 6 and 7.								
"C" BAND ALIGNMENT	9	Ant. Terminal	Gnd	300 Ohm Resistor	17.75 Mc	"C" Band	34.4°	Osc. & Ant.	† C-16 & C-3	" "
	10	"	"	"	7.2 Mc	"	160.3°	Osc.	L-11	" "
	11	Repeat Steps 9 and 10.								
31-25M BAND ALIGNMENT	12	Ant. Terminal	Gnd	300 Ohm Resistor	9.5 Mc	31-25 M Band	169.6°	Osc. & Ant.	* C-13 & * C-2	" "
	13	"	"	"	11.8 Mc	"	44.8°	Osc. & Ant.	† L-12‡ & L-5‡	" "
	14	Repeat Steps 12 and 13.								
19-16M BAND ALIGNMENT	15	Ant. Terminal	Gnd	399 Ohm Resistor	17.75 Mc	19-16 M Band	37.5°	Osc. & Ant.	† C-19 & C-8	" "
	16	"	"	"	15.2 Mc	"	157.2°	Osc. & Ant.	† L-13 L-6	" "
	17	Repeat Steps 15 and 16.								

† Oscillator frequency is higher than signal frequency on all bands. Use minimum capacity or minimum inductance peak on oscillator adjustments if two peaks can be obtained.

* Pre-set L12 and L5, with tuning condenser at minimum capacity (0°), so that the cores are exactly 1/8 in. (3.175 mm) from the bottom end of their respective coils (coil end to bottom end of iron core not the insulating rod of the core assembly).

‡ If dial reading for maximum output at 11.8 mc is lower than 11.8 mc, rotate studs approx. 1/2 turn clockwise if higher rotate approx. 1/2 turn counterclockwise.

REPLACEMENT PARTS FOR MODEL 7Q51

Insist on Genuine Factory Tested Parts, which are readily identified and may be purchased from Authorized Dealers

Stock No.	Description	List Price
	CHASSIS ASSEMBLY	
S-4512	Board - antenna terminal board	
S-4513	Capacitor - trimmer 4 - 70 MMF. (C2)	
S-4514	" - " 4 - 70 MMF. & 3 - 35 MMF. (C14-C15)	
S-4515	" - " 5 - 25 MMF. & 8-50 MMF. (C13-C16-C19)	
S-4516	" - " four sections of 3 - 35 MMF. (C3-C4-C5-C8)	
S-4517	" - " 7 MMF. Ceramic (C6)	
S-4518	" - " 22 MMF. " (C17)	
S-4519	" - " 27 MMF. " (C7)	
S-4520	" - " 27 MMF. " (31)	
S-4521	" - " 120 MMF. " (18)	
S-4439	" - " 220 MMF. Mica (C9-C36)	
S-4440	" - " 560 MMF. " (C25)	
C-4522	" - " 3000 MMF. " (C24)	
S-4442	" - " 6000 MMF. " (C23)	
S-4543	" - " .0068 Mfd. 400 V. (C34)	
S-4542	" - " .0047 Mfd. 1000 V. (C40-C41)	
S-4541	" - " .003 Mfd. 600 V. (C35-C37)	
S-4448	" - " .047 Mfd. 200 V. (C22)	
S-4544	" - " .015 Mfd. 400 V. (C33)	
S-4820	" - " .01 Mfd. Ceramic (C27-C28)	
S-4444	" - " .01 Mfd. 400 V. (C11-C29-C32-C38-C39)	
S-4545	" - Electrolytic 1 section 20 Mfd. 400 V. - 2 sections 10 Mfd. 450 V. - 1 section 20 Mfd. 25 V. (C12A-C12B-C12C-C12D)	
S-4523	Capristor - 56 MMF. 33 ohms (C10-R2)	
S-4524	Choke - Cathode choke coil (L14)	
S-4525	Coil "A" band oscillator coil (L7-L8)	
S-4526	" "B" " " " (L9-L10)	
S-4527	" "C" " " " (L11)	
S-4528	" "31-25" Meter antenna or oscillator coil (L5-L12)	
S-4529	" "19-16" Meter antenna or oscillator coil (L6-L13)	
S-4546	" A-B-C bands antenna coil (L1-L2-L3-L4)	
S-4531	Core - adj. core & stud for S-4528	
S-4530	Condenser - tuning condenser (C1-C26)	
S-4532	Drum - tuning condenser drum, hub & cam assy.	
S-4589	Indicator - station selector pointer	
S-4551	Lever - Range Indicator lever & hub	
S-4897	Lamp - pilot lamp (Mazda #44)	
S-4534	Plate - Rocker arm plate & stud assy (less adjustable cores)	
S-4552	Resistor 560 ohms - 1 watt (R18)	
S-4553	" 2200 " - 2 " (R19)	
S-4554	" 10,000 " - ½ " (R15)	
S-4555	" 18,000 " - 1 " (R4)	
S-4556	" 22,000 " - ½ " (R9)	
S-4535	" 22,000 " - ½ " (R3)	
S-4557	" 82,000 " - ½ " (R5)	
S-4558	" 100,000 " - ½ " (R21)	
S-4559	" 270,000 " - ½ " (R17)	
S-4560	" 330,000 " - ½ " (R8)	
S-4476	" 470,000 " - ½ " (R1-R13-R16)	
S-4581	" 470,000 " - ½ " (R14)	
S-4562	" 2.2 Megohms - ½ " (R6)	
S-4478	" 4.7 " - ½ " (R12-R20)	
S-4894	Socket - tube socket	
S-4563	" - Dial lamp socket	
S-4480	" - Phono input or speaker output socket	
S-4567	" - tube socket (octal) (for 6SQ7)	
S-4482	Socket - tube socket (octal) (for 5Y3GT or 6F6G)	
S-4568	" - " " (Miniature) for 6AT6	
S-4538	Switch - range switch (S1-S2-S3)	
S-4565	Shaft - range switch shaft	
S-4566	" - tuning control shaft	
S-4569	Switch - radio phono switch (S6)	
S-4570	" - voltage change switch (S4)	
S-4564	Spring - dial cord tension spring	
S-4537	" - rocker arm plate tension	
S-4536	Screw - rocker arm plate bearing screw (Pkg. 5)	
S-4539	Transformer - 1st I.F. (T2)	
S-4571	" - 2nd I.F. (T3)	
S-4573	" - Power - 105 - 125 volts 50/60 cycles (T1)	
S-4574	" - Power - 105/125 volts 25/60 cycles (T1)	
S-4547	Volume Control, tone control & switch (R10-R11-S5)	
	SPEAKER ASSEMBLY - 6½" PM ROUND	
S-4578	Cone - cone & voice coil assembly	
S-4580	Speaker complete with cable	
S-4572	Output transformer (T4)	
S-4579	Plug - pin plug (male) for speaker cable	
	MISCELLANEOUS ASSEMBLY	
S-4540	Bracket - dial cord bracket & pulley assembly	
S-4581	Back - Cover for cabinet	
S-4582	Baffle - baffle board & grille cloth	
S-4583	Bezel - dial bezel	
S-4584	Cabinet	
S-4585	Cover - plastic dial cover	
S-4313	Cord - dial drive cord	
S-4548	Cord - power cord	
S-4586	Dial - dial scale glass	
S-4499	Emblem - (RCA)	
S-4500	" - (RCA Victor)	
S-4587	Grille - Metal grille	
S-4588	Grommet - to mount chassis (Pkg. 4)	
S-4503	" - " " speaker (Pkg. 4)	
S-4533	" - " " tuning condenser (Pkg. 3)	
S-4549	Gear - gear & hub for range switch shaft	
S-4550	" - " & " " " " control	
S-4590	Knob - range switch knob	
S-4591	" - volume control knob	
S-4895	" - tuning control knob	
S-4896	" - tone control knob	
S-4592	Plate - dial back plate	
S-4594	Screw - chassis mounting screw (Pkg. 3)	
S-4898	Spring - retaining spring for range knob (Pkg. 5)	
S-4594	" - " " " tuning knob (Pkg. 3)	
S-4909	" - " " " vol. control (Pkg. 3)	
S-4910	" - " " " tone control knob (Pkg. 5)	
S-4511	Spacer - metal spacer for speaker mtg. (Pkg. 4)	
S-4595	Shield - dial lamp shield	
S-4576	Washer "C" washer for range switch shaft (Pkg. 3)	
S-4577	Washer "C" washer to retain tuning shaft on range switch shaft (Pkg. 3)	

All Prices and Parts are subject to change or withdrawal without notice.

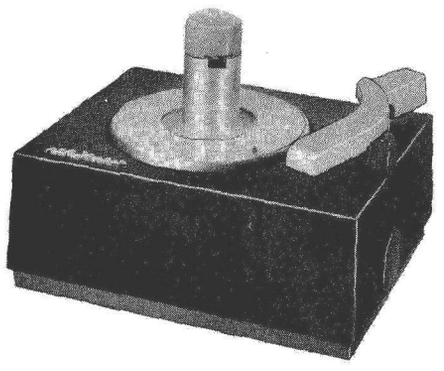

MODEL 9JY

For Record Changer Service Information—Refer to RP168 Series Service Note.

RCA VICTOR

"HIS MASTER'S VOICE"

RECORD CHANGER ATTACHMENT & PLAYER

MODELS 9JY & 9EY3
SERVICE DATA

—1949 No. 13—

GENERAL SERVICE DIVISION
RCA VICTOR COMPANY LIMITED
MONTREAL, QUE.

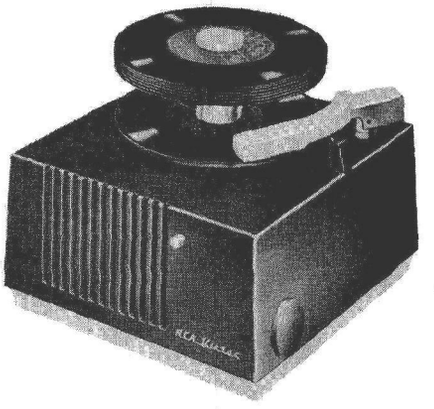

MODEL 9EY3

Electrical and Mechanical Specifications

MODELS 9JY & 9EY3 (Record Changer RP-168-1)
Turntable speed ----------45 R.P.M.
Records used ----------Long playing—7 in.
Record capacity ----------8 Records
Pickup ----------Crystal (Medium output)

POWER SUPPLY RATING	9JY	9EY3
115 Volts, 25 or 60 cycles A.C. -----	15 watts	45 watts

TUBE COMPLEMENT (9EY3 only)
1) Type 12AV6 ----------Amplifier
2) Type 50C5 ----------Output
3) Type 35W4 ----------Rectifier

LOUDSPEAKER (9EY3 only)
Size and Type ----------4 in. P.M.
Voice coil impedance ----------3.20 ohms at 400 cycles

POWER OUTPUT (9EY3 only)
Undistorted ----------1.0 watt
Maximum ----------1.25 watts

DIMENSIONS (Overall)	Height	Width	Depth
9JY ----------	6⅝"	9⅛"	6⅞"
9EY3 ----------	7⅝"	9 11/16"	9⅝"

Record Separator

In the out of cycle position the record separator knives or discs are normally concealed inside the center post. During service, the position of the star wheel on the underside of the record changer may be accidently shifted; this may cause the separator knives to be extended when they should be concealed.

If the separator knives are thus extended—turn the power on so that the turntable is revolving, gently press fingers against the extended knives until they disappear inside the center post—DO THIS ONLY WHILE MECHANISM IS OUT OF CYCLE.

REPLACEMENT PARTS FOR MODELS 9JY & 9EY3

Insist on Genuine Factory Tested Parts, which are readily identified and may be purchased from Authorized Dealers

STOCK NO.	DESCRIPTION	LIST PRICE
	Amplifier Chassis Assembly 9EY3	
39648	Capacitor 680 MMF 10%, 300 V. Mica (C1)	
	" .003 Mfd. 10%, 200 V. (C2)	
	" .002 " 40%, 400 V. (C4)	
	" .05 " 40%, 400 V. (C7-C8)	
	" .02 " 10%, 400 V. (C6)	
	" .01 " 20%, 200 V. (C5)	
S-4995	" - Electrolytic 80 - 40 - Mfd. (C5A-B)	
S-4996	Resistor - 120 ohms 5 watt (R7)	
	" - 150 " ½ " (R9) 10%	
	" -2700 " ½ " 10% (R10)	
	" -120,000 ohms ½ watt 10% (R4)	
	" -180,000 " ½ " 10% (R2)	
	" -270,000 " ½ " 10% (R6)	
	" -470,000 " ½ " 20% (R1-R8)	
	" -4.7 Megohms ¼ " 20% (R5)	
73117	Socket - tube socket	
S-4994	Volume Control (9EY3) (R3-S1)	
S-5003	" " (9JY)	
	Speaker Assembly - 4" PM	
S-3556	Dust Cap (Pkg. 3)	
S-4330	Cone - cone & voices coil assy	
S-5033	Output Transformer (T1)	

STOCK NO.	DESCRIPTION	LIST PRICE
	Miscellaneous Assembly	
S-5035	Base - cabinet base (9JY)	
S-4990	" - " " (9EY3)	
S-5037	Baffle	
S-5002	Button - push button (9JY)	
74138	" - " " ass'y (9EY3)	
S-4992	Bracket & shaft assembly (9EY3)	
S-4989	Cabinet (9EY3)	
S-5001	" (9JY)	
S-5036	Cable - pickup cable	
S-5039	Cable - 2 pin plug & cable assy	
S-5038	Cord - power cord (9EY3)	
31051	Foot - rubber foot (pkg. 2)	
S-4991	Knob - volume control	
S-5034	Monogram - RCA Victor	
74192	Plug - pickup cable plug (3 pin)	
30868	" - 2 pin plug (female) for motor cable	
30870	" - 2 " " (male)	
14270	Spring - knob retaining sprin g (Pkg. 2)	
	Automatic Record Changer Mechanism	
	Refer to RP 168 Series Service Note for replacement parts & service data.	

All Prices and Parts are subject to change or withdrawal without notice.

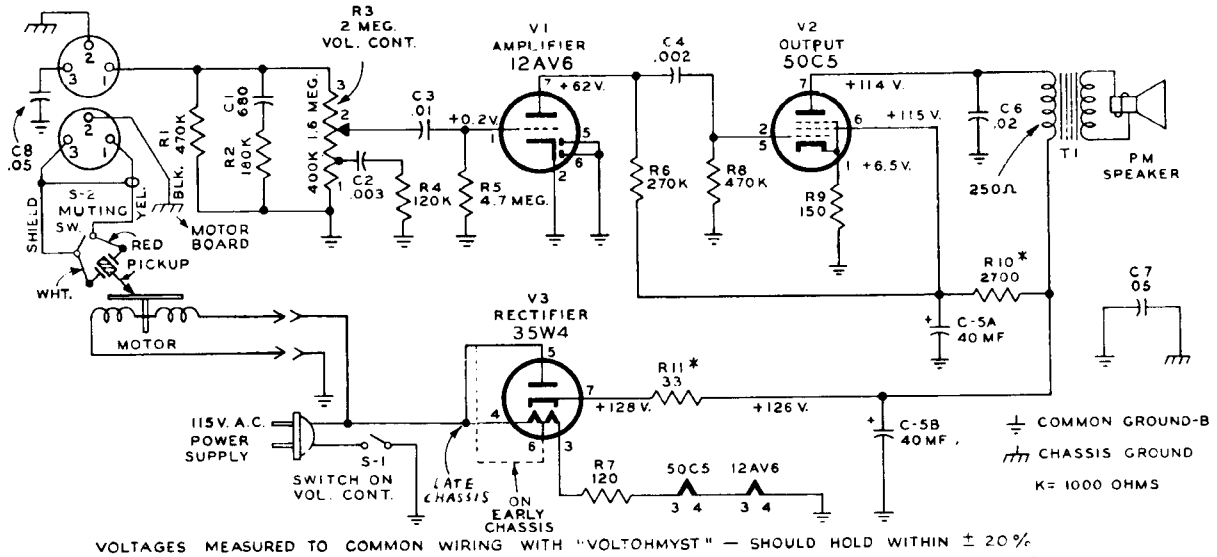

VOLTAGES MEASURED TO COMMON WIRING WITH "VOLTOHMYST" — SHOULD HOLD WITHIN ± 20%
* IN SOME CHASSIS R10 IS 5600 OHMS, R11 IS NOT USED, RECTIFIER CIRCUIT AS SHOWN BY DOTTED LINE

FIG. 1 SCHEMATIC DIAGRAM (9EY3)

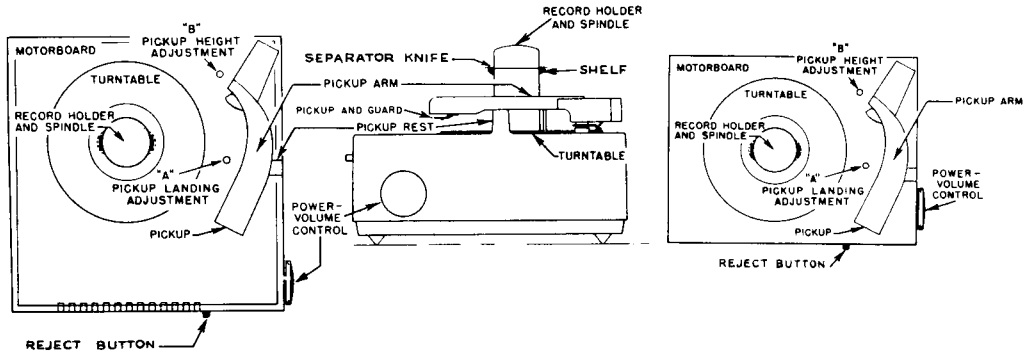

FIG. 2 TOP VIEW (9EY3)

FIG. 3 SIDE VIEW (9EY3)

FIG. 4 TOP VIEW (9JY)

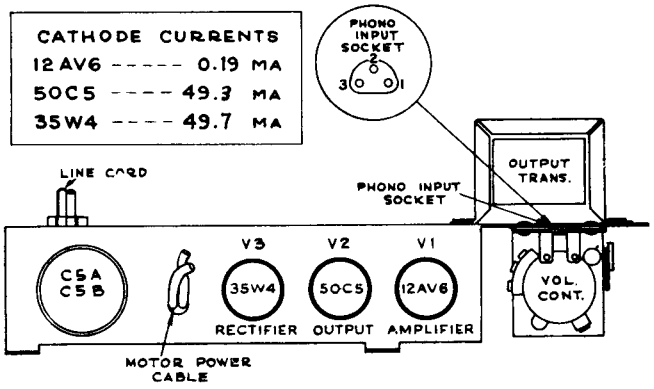

FIG. 5 CHASSIS LAYOUT (9EY3)

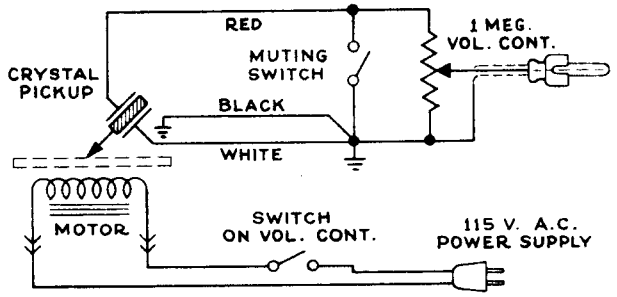

In some instruments: Black wire is omitted or a shielded wire is used in place of the red-black-white cable.

FIG. 6 SCHEMATIC DIAGRAM (9JY)

Pickup Landing Adjustment "A"

The pickup point should land half-way between the outer edge of the record and the first music groove.

If the pickup lands inside the starting grooves—turn screw "A" slightly clockwise. If pickup lands outside the starting grooves—turn screw "A" slightly counterclockwise.

Pickup Height Adjustment "B"

During cycle the pickup arm must rise high enough to clear a stack of eight records on the turntable, but not high enough to cause the top of the arm to touch records resting on the record supports.

If pickup does not clear a stack of eight records—turn screw "B" slightly clockwise. If pickup arm touches records on record supports—turn screw "B" slightly counterclockwise.

Record Changer Mounting

The cabinet is used as the motor board of the record changer. The record changer is attached to the cabinet with three screws, grommets and spacers. THE PICKUP ARM MUST BE REMOVED BEFORE THE RECORD CHANGER CAN BE REMOVED—REFER TO RP-168 SERIES SERVICE DATA.

To Remove Chassis (9EY3)

Remove the four screws at the corners of the bottom cover, separate the motor power plug and socket and remove the pickup cable from its socket on the amplifier chassis.

Elongated holes permit the speaker position to be adjusted. If the speaker should be replaced or its mounting bracket loosened, the speaker mounting bracket screws should not be tightened until after the bottom cover is assembled to the cabinet.

RCA TYPE S-5097 RECORD PLAYER SELECTOR

When two record attachments are used in conjunction with one receiver, it is necessary to have some means of switching from one record attachment to the other. Switch S-5097 has been designed to simplify this switching operation.

Refer to the Model VA34 Service Note (Switch and Pickup Data) for information on connecting the Model 9JY record player to radio receivers not equipped with phono input sockets.

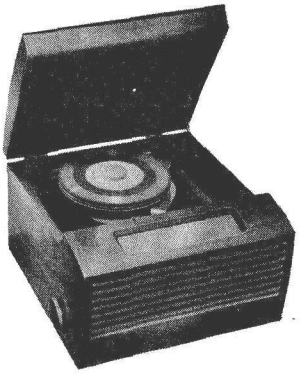

Models 9Y5 & 9Y5S
For Record Changer Service Information—refer to RP168 Series Service Note.

RCA VICTOR

"HIS MASTER'S VOICE"

RADIO PHONOGRAPH COMBINATION

MODELS 9Y5 & 9Y5S

SERVICE DATA

—1949 NO. 24—

GENERAL SERVICE DIVISION
RCA VICTOR COMPANY LIMITED
MONTREAL, QUE.

Electrical and Mechanical Specifications

TUNING RANGE (9Y5)

Standard Broadcast ---------- 540-1600 KC

TUNING RANGE (9Y5S)

Standard Broadcast ---------- 540-1600 KC
Short Wave ---------- 5.8 - 18.2
INTERMEDIATE FREQUENCY ---------- 455 KC

TUBE COMPLEMENT

(1) Type 12BE6 ---------- Converter
(2) Type 12SF7 ---------- I.F. Amplifier Det. & A.V.C.
(3) Type 12SC7 ---------- Audio Phase Inverter
(4) Type 35C5 ---------- Output
(5) Type 35C5 ---------- Output

A Selenium rectifier is used.

Dial Lamps (1) ---------- Mazda 1813

Tuning Drive Ratio ---------- 19:1 (9½ turns of knob)

POWER SUPPLY RATING

Rating A---- 105-125 Volts, 60 cycles, .40 amps., 46 watts
Rating B---- 105-125 Volts, 25 cycles, .40 amps., 46 watts

LOUDSPEAKER

Size and type ---------- 4 x 6 in. P.M. Elliptical
Voice Coil Impedance ---------- 3.2 ohms at 400 cycles

POWER OUTPUT

Undistorted ---------- 2.5 watts
Maximum ---------- 3.5 watts

RECORD CHANGER (RP-168-1)

Turntable speed ---------- 45 r.p.m.
Record Capacity ---------- Ten 7 in.
Pickup ---------- Crystal (Medium output)

CABINET DIMENSIONS

Height ---------- 8 in.
Width ---------- 12¾ in.
Depth ---------- 13½ in.



Fig. 1. The Dial Scale drawing shown is a full size reproduction. It can be used as a reference in alignment procedure. (9Y5)

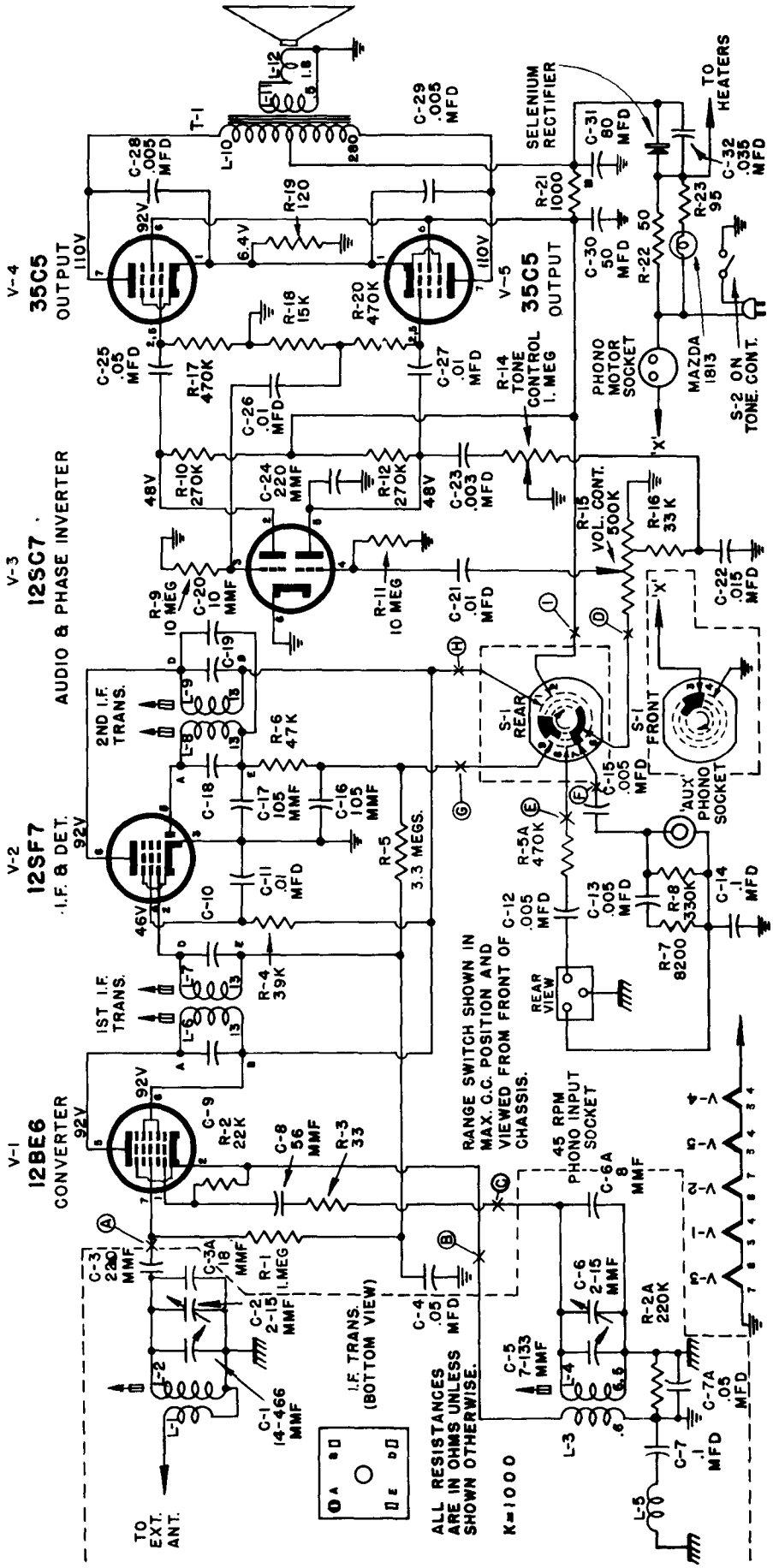

Fig. 2. Schematic Diagram. (9Y5).

For 9Y5S Schematic, eliminate the dotted portions and connect Schematic with corresponding symbols in Figure 3.

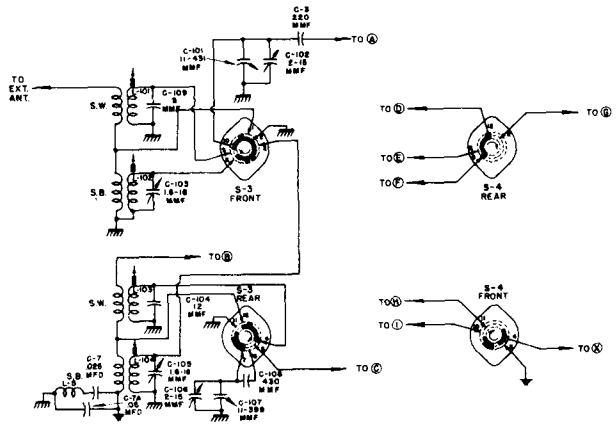

Fig. 3—Schematic outlining additions made to 9Y5 Schematic for 9Y5S Schematic.

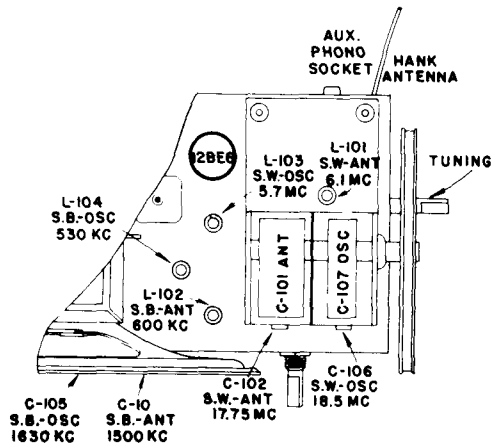

Fig. 4—Chassis Layout showing Alignment Adjustments on Model 9Y5S (only).

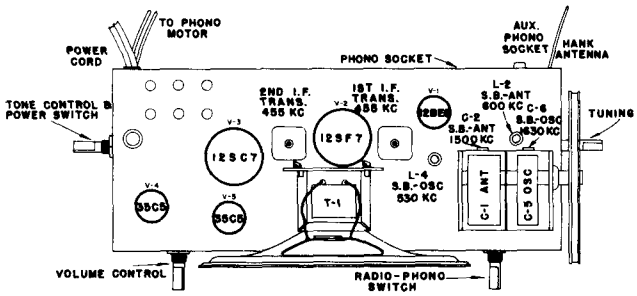

Fig. 5—Chassis Layout and Alignment Adjustments for Model (9Y5).

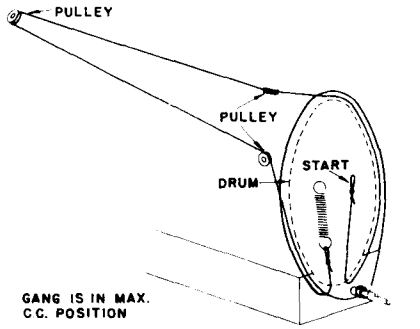

Fig. 6—Dial Cord Stringing

CRITICAL LEAD DRESS

(1) Dress A-C leads away from 12SC7 socket and associated components.

(2) Dress output plate by-pass capacitors C-28 and C-29 close to chassis below the volume control and away from all audio leads.

(3) Dress green lead from volume control away from chassis.

NOTE: C-7 & L-5 form a special capacitor which is resonant to the I.F. frequency. In the event that this capacitor be replaced, care should be taken so as to replace it with a similar type. If this is not done, the set may be subject to I.F. regeneration. (See parts list).

ALIGNMENT PROCEDURE

Before aligning the receiver, set the gang condenser for maximum capacity and then set the dial cursor on the calibration point at the extreme left hand end of the dial. The dial scale may be readily removed from the cabinet and used as a reference during alignment.

When only a portion of the circuit is to be aligned select the required portion and perform all the remaining steps.

In order to obtain best results, it is advisable to align the 455 KC I.F.'s with the help of a cathode ray oscilloscope. The scope should be connected across the volume control. If this equipment is not available, use the method outlined below in the alignment chart.

It may be necessary to use an isolation transformer (117 V/117 V) during alignment, if the test oscillator is AC-DC operated.

ALIGNMENT CHART

Order of Alignment		TEST OSCILLATOR				RECEIVER				
		Connect "HI" Side To	Connect "LO" Side To	Dummy Antenna	Frequency Setting	Range Selector	Receiver Dial Setting	Circuit To Adjust	Adjustment Symbols	Notes
I.F. Alignment	1	Pin #2 12SF7	Common GND	.1MFD	455KC	S.B.	"HI" End	2nd I.F. Trans.	L-8, L-9	Max. Out.
	2	Pin #7 12BE6	Same	Same	Same	Same	Same	1st I.F. Trans.	L-6, L-7	Same
	3	Repeat steps 1 and 2.								
S.W. Alignment	4	Ant Coil Terminal	Same	300 OHMS	5.7 MC	S.W.	"LO" End	S.W. Osc.	L-103 (9Y5S)	Same
	5	Same	Same	Same	18.5 MC	Same	18.5 MC	S.W. Osc.	C-106 "	Same
	6	Same	Same	Same	6.1 MC	Same	6.1 MC	S.W. Ant.	L-101 "	Same
	7	Same	Same	Same	17.75 MC	Same	17.75 MC	S.W. Ant.	C-102 (Rock In)"	Same
	8	Repeat steps 4 to 7.								
S.B. Alignment	9	Ant Coil Terminal	Same	47 MMF	530 KC	S.B.	"LO" End	S.B. Osc.	L-104 (9Y5S) L-4 (9Y5)	Same
	10	Same	Same	Same	1630 KC	Same	1630 KC	S.B. Osc.	C-105 (9Y5S) C-6 (9Y5)	Same
	11	Same	Same	Same	600 KC	Same	600 KC	S.B. Ant.	L-102 (9Y5S) L-2 (9Y5)	Same
	12	Same	Same	Same	1500 KC	Same	1500 KC	S.B. Ant.	C-10 (9Y5S) C-2 (9Y5)	Same
	13	Repeat steps 9 to 12.								

NOTE: When aligning Model 9Y5 receiver, follow steps 1, 2, 3, 9, 10, 11, 12, and 13.
When aligning Model 9Y5S receiver, follow steps 1 to 13 inclusive.

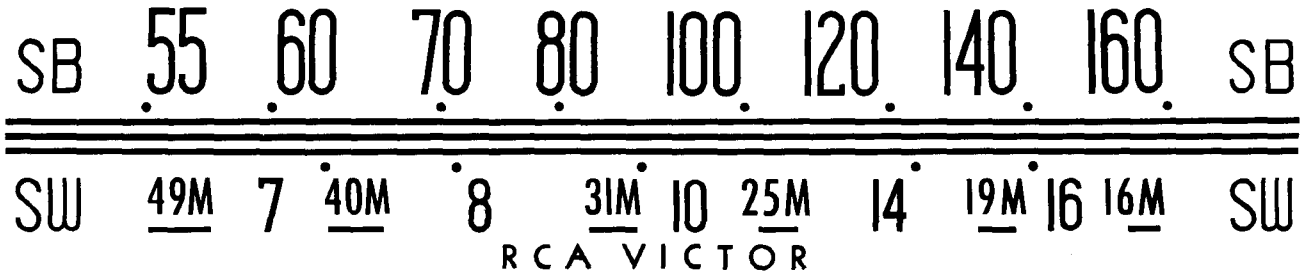

Fig. 7—The Dial Scale drawing shown is a full size reproduction. It can be used as a reference in alignment procedure. (9Y5S)

REPLACEMENT PARTS FOR MODEL 9Y5-9Y5S

Insist on genuine factory tested parts, which are readily identified and may be purchased from authorized dealers.

Stock No.	Description	List Price
	CHASSIS ASSEMBLY	
S-5460	Capacitor, cermaic 8MMF (C-109)	
S-5385	" 10 MMF. +- 10% (C-20)	
S-5461	" ceramic 12 MMF. (C104)	
39643	mica 430 MMF. (C108)	
S-4523	Capristor, 56 MMF & 33 ohms (C-8, C-3)	
S-4614	" 2 - 105 MMF. & 47,000 ohms (C-16, C-17, R-6)	
S-4221	Capacitor, 220 MMF. +- 20% (C-3, C-24)	
.....	" .003 Mfd. +- 10% (C-23)	
.....	" .005 Mfd. + - 10% 200 V. (C-13)	
.....	" .005 Mfd. 500 V. (C-12, C-15)	
.....	" .005 Mfd. +- 10%, 600 V. (C28,C29)	
.....	" .01 Mfd. +- 20%, 200 V. (C26)	
.....	" Ceramic, .01 Mfd. 500 V. (C21-C27-C11)	
.....	" .015 Mfd. +- 10%, 200 V. (C22)	
S-5409	" .025 Mfd. (Resonant at 455 KC) (L5, C7)	
.....	" .035 Mfd. +- 10%, 400 V., (C32)	
.....	" .05 Mfd. +- 20%, 200 V. (C4-C25)	
.....	" .05 Mfd. +- 10%, 400 V., (C7A)	
.....	" .1 Mfd. +- 10%, 400 V., (C14)	
S-5313	" Electrolytic, 50-80 Mfd. (C30,C31)	
S-5311	Condenser - gang condenser (9Y5) (C1-C2-C5-C6)	
S-5312	" - gang condenser (9Y5S) (101, C102, C106, C107)	
S-5308	Control - volume control 500,000 ohms (R15)	
S-5309	" - tone control & power switch (R14,S2)	
S-5299	Coil - ant. coil (9Y5) (L1-L2)	
S-5301	" - osc. coil (9Y5) (L3-L4)	
S-5298	" - coil S.B. ant. coil (9Y5S) (L102)	
S-5300	" - S.B. osc. coil (9Y5S) (L104)	
S-5302	" - S.W. ant. coil (9Y5S) (L101)	
S-5303	" - S.W. osc. coil (9Y5S) (L103)	
S-5459	Resistor - 13.5 ohms at 104° C to 95 ohms at 38° C. +- 20% (R23)	
.....	" - 50 ohms (R22)	

Stock No.	Description	List Price
	CHASSIS ASSEMBLY (Cont'd)	
.....	Resistor - 120 ohms +- 10% 1 watt (R19)	
.....	" - 1000 ohms +- 10% ½ watt (R21)	
.....	" - 8200 ohms +- 10% ½ " (R7)	
.....	" - 15,000 ohms +- 10% ½ watt (R18)	
.....	" - 22,000 " +- 20% ½ watt (R2)	
.....	" - 33,000 " +- 10% " " (R16)	
.....	" - 39,000 " +- 10% " " (R4)	
.....	" - 220,000 " +- 10% " " (R2A)	
.....	" - 270,000 " +- 10% " " (R10,R12)	
.....	" - 330,000 " +- 10% " " (R8)	
.....	" - 470,000 " +- 10% " " (R5A)	
.....	" - 470,000 " +- 20% " " (R17,R20)	
.....	" - 1.0 Megohm +- 20% " " (R1)	
.....	" - 3.3 " +- 20% " " (R5)	
.....	" - 10 " +- 20% " " (R9,R11)	
S-5306	Switch - range switch (9Y5S) (S3, S4)	
S-5307	Switch - radio-phono switch (9Y5) (S1)	
S-5410	Selenium rectifier	
S-5304	Transformer - 1st I.F.transformer (L6,L7,C9,C10)	
S-5305	" - 2nd I.F. " (L8,L9,C18,C19)	
S-5310	" - Output transformer (T1)	
	SPEAKER ASSEMBLY	
S-5315	Cone & voice coil assembly (L12)	
	MISCELLANEOUS ASSEMBLY	
S-4313	Cord - dial cord (standard)	
S-5397	Dial - dial scale (9Y5)	
S-5296	Dial - dial scale (9Y5S)	
S-5293	Knob - (Radio-Phono, Sw. Knob)(9Y5)	
S-5294	" - (Volume control knob)	
S-5295	" - (Tone control & tuning)	
S-5525	" - (Range switch knob)(9Y5S)	
S-5314	Pointer - dial pointer	
S-5411	Decalcomania	
S-5412	Lid support	

Only items listed under stock numbers are available as Replacement Parts.
All parts and prices subject to change or withdrawal without notice.

RCA VICTOR

"HIS MASTER'S VOICE"

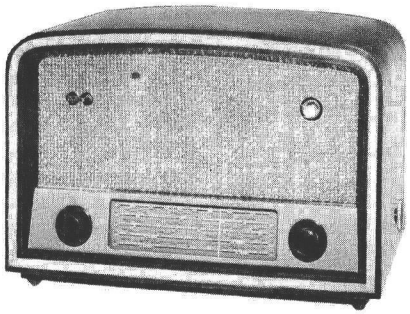

MODEL 9Q53

SERVICE DATA

— 1949 NO. 7 —

GENERAL SERVICE DIVISION
RCA VICTOR COMPANY LIMITED
MONTREAL, QUE.

MODEL 9Q53

Electrical and Mechanical Specifications

Tuning Ranges
Standard Broadcast ("A" Band) _____525-1600 kc (571-187 m)
Medium Wave ("B" Band)_____2.3-7 mc (130-42.9 m)
Short Wave ("C" Band)_____7-22 mc (42.9-13.6 m)
"31-25 Meter" Spread Band_____9.5-12 mc (31.6-25 m)
"19-16 Meter" Spread Band_____15.1-17.9 mc (19.8-16.7 m)

Intermediate Frequency _____455 kc

Tube Complement
(1) RCA 6BA6 _____ R.F. Amplifier
(2) RCA 6BE6 _____Converter
(3) RCA 6SF7 _____I.F. Amp.—Det.—A.V.C.
(4) RCA 6SC7 _____A.F. Amp.—Ph. Inverter
(5) RCA 6F6G } _____ Push-Pull Output
(6) RCA 6F6G }
(7) RCA 5Y3GT _____ Rectifier
(8) RCA 6U5/6G5 _____Tuning Eye

Lamps
Dial Lamps (2) _____Mazda Type 44, 6.3 volts, .25 amp.
Band Indicator Lamp _____Mazda Type 47, 6.3 volts, .15 amp.

Power Supply Ratings
Voltage _____105 to 125 volts
Frequency _____25 & 60 Cycles
Watts _____ 80

Loudspeaker
Type _____8 in. PM Dynamic
Voice Coil Impedance _____2.2 ohms at 400 cycles

Power Output Rating
Undistorted _____ 5 watts
Maximum _____5.75 watts

Tuning Drive Ratio _____15½ : 1 (7¾ turns of knob)

Cabinet Dimensions
Height 13-15/16 in. Width 20 in.
Depth 10-11/16 in.

General Description

This instrument is an eight tube five-band receiver of conventional design with the exception of the spread-band tuning.

A three section gang condenser, one section each for antenna, r.f. and oscillator circuits, is used for the A, B and C bands. The 31-25 Meter and the 19-16 Meter spread-bands are tuned by a permeability tuning system using a rocker arm assembly which is actuated by a cam attached to the tuning condenser shaft. The core assembly of the permeability tuning system tunes both the 31-25 Meter and the 19-16 Meter bands with different circuit connections.

In the 31-25 Meter band position the 31-25 Meter coils are used. In the 19-16 Meter band position the 31-25 Meter and the 19-16 Meter band coils are used in parallel.

The inductances of the A-B-C windings of the multiple antenna coil are all fixed, but the inductances of all other coils in the antenna, r.f. and oscillator circuits are adjustable. Ungrounded screw type cores are used for these coils and adjustments are made with a non-metallic screwdriver.

A local-remote switch permits reduction of sensitivity on A band to prevent overloading on strong signals. On all other bands full sensitivity is used and the switch is not effective.

The tone control is continuous and is designed to function as a high or low frequency tone control when the control knob is turned to the right or to the left. The center position gives both high and low frequency response.

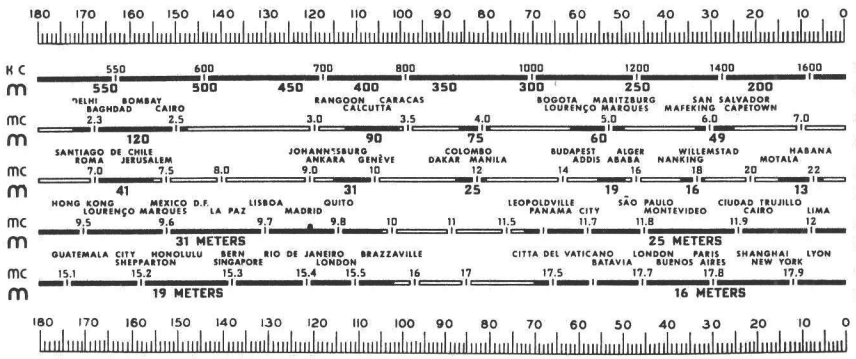

The corresponding position of the dial indicator for any setting of the calibration scale can be determined by drawing a line from this point on the bottom calibration scale to the same point on the top calibration scale. For example: 143° on the calibration scale corresponds to approximately 600 kc on "A" band, etc. Read instructions under "Alignment Procedures."

Reduced Reproduction of Receiver Dial and Corresponding 0-180° Calibration Scales

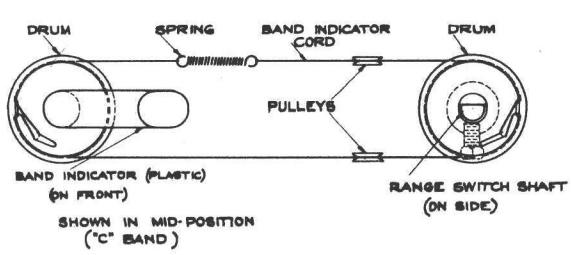

Fig. 1—Dial Indicator and Drive Mechanism

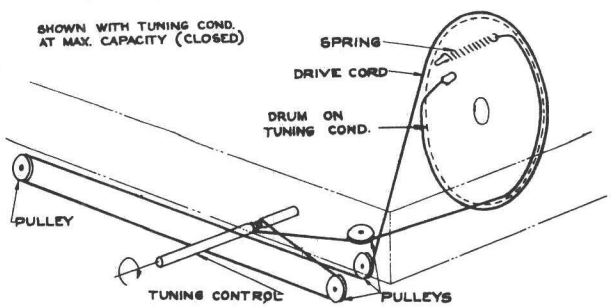

Fig. 2—Dial Cord Stringing

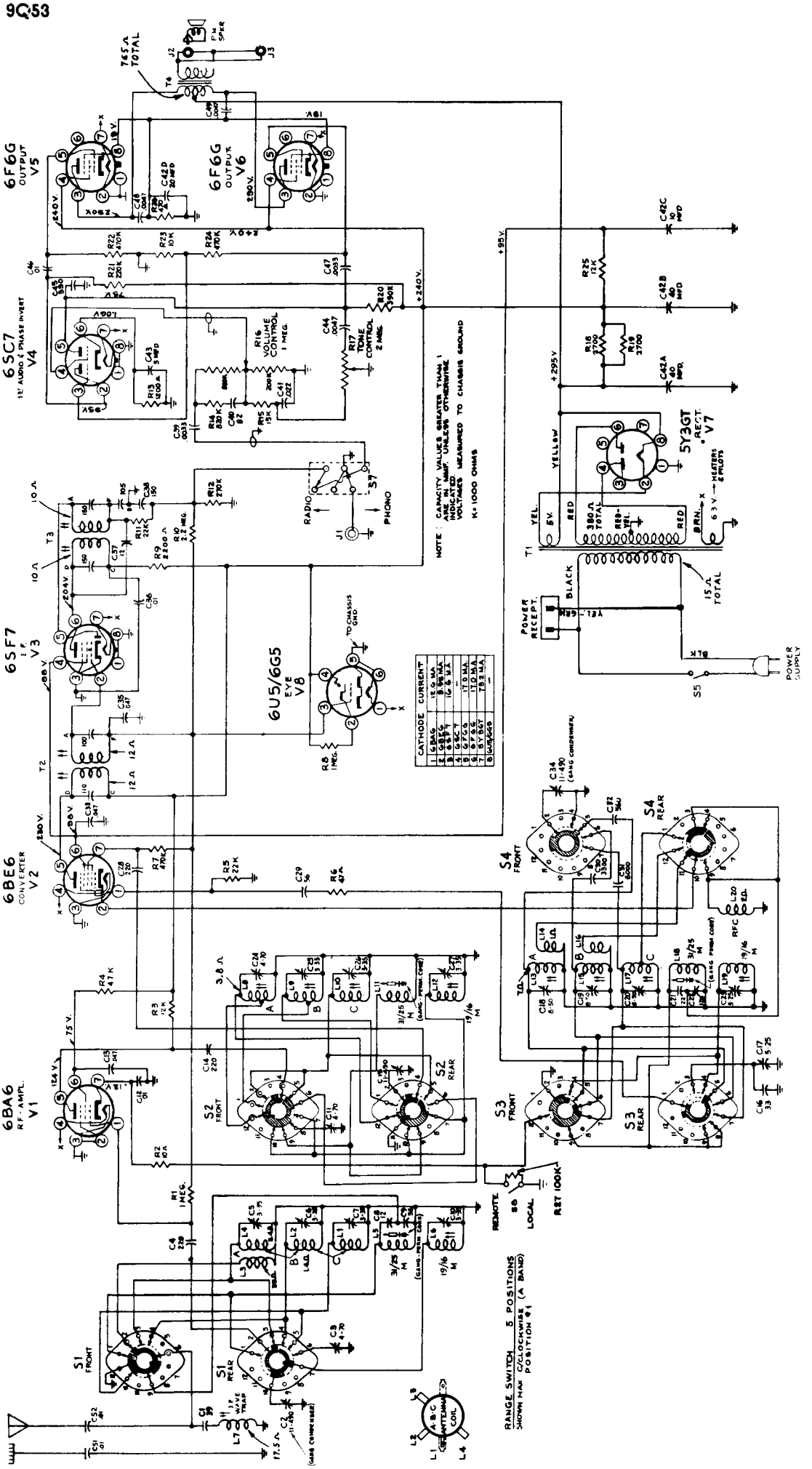

Fig. 3—Schematic Diagram

Alignment Procedure and Chart

Test-Oscillator.—For all alignment operations, connect the low side of the test-oscillator to the receiver chassis, and keep the oscillator output as low as possible to avoid a-v-c action.

Calibration Scale on Indicator-Drive-Cord Drum.—The tuning dial is fastened in the cabinet and cannot be used for reference during alignment, therefore a calibration scale is attached to the indicator-drive-cord drum which is mounted on the shaft of the gang condenser. The setting of the gang condenser is read on this scale, which is calibrated in degrees.

As the first step in r-f alignment, check the position of the drum. The "180°" mark on the drum scale must be vertical and directly over the center of the gang-condenser shaft when the plates are fully meshed. The drum is held to the shaft by means of two set screws, which must be tightened securely when the drum is in the correct position.

Pointer for Calibration Scale.—Improvise a pointer for the calibration scale by fastening a piece of wire to the gang-condenser frame, and bend the wire so that it points to the "180°" mark on the calibration scale when the plates are fully meshed. The correct setting of the gang in degrees, for each alignment frequency, is given in the alignment table.

Receiver Dial with Calibration Scale.—To determine the corresponding frequency for any setting of the calibration scales, refer to the dial with calibration scale drawing.

Dial-Indicator Adjustment.—After fastening the chassis in the cabinet, attach the dial indicator to the drive cable with indicator at the end calibration mark, and gang condenser fully meshed. The indicator has a clip for attachment to the cable.

Spread-Band Alignment.—For spread-band alignment an extremely high degree of accuracy is required of the test-oscillator, as a slight error will produce considerable inaccuracy on the spread-band dials.

Determine the exact dial settings of the test-oscillator (for frequencies at or close to the specified alignment frequencies) by one of the following methods:

1. Zero-beat the test-oscillator against short-wave stations of known frequency.
2. Check test-oscillator signals with a crystal controlled oscillator.

A final check should be made on actual reception of short-wave stations of known frequency.

Order of Alignment		TEST OSCILLATOR				RECEIVER				
		Connect "HI" Side To	Connect "LO" Side To	Dummy Antenna	Frequency Setting	Range Selector	Receiver Dial Setting	Circuit to Adjust	Adjustment Symbols	Notes
I.F. ALIGNMENT	1	Pin #7 6SF7	Gnd	.01 Mfd	455 Kc	Band "A"	600 Kc	2nd I.F.Trans.	T-3 Top & Bottom	Max. Out.
	2	Pin #7 6BE6	Same	Same	Same	Same	Same	1st I.F.Trans.	T-2 Top & Bottom	Same
"A" BAND ALIGNMENT	3	"Ant" Terminal	Same	200 Mmf	1400 Kc	Same	27.3°	Osc. RF Ant.	C-18 C-24 C-5	Same
	4	Same	Same	Same	600 Kc	Same	142.6°	Osc. RF	L-13 L-8	Same
	5	Repeat Steps 3 & 4.								
	6	Same	Same	Same	455 Kc	Same	142.°	Wavetrap	L-7	Minimum Output
"B" BAND ALIGNMENT	7	Same	Same	300 Ohm Resistor	6.1 Mc	Band "B"	28.2°	Osc. RF Ant.	C-19 C-25 C-6	Max. Out.
	8	Same	Same	Same	2.5 Mc	Same	148.9°	Osc. RF	L-15 L-9	Same
	9	Repeat Steps 7 & 8.								
"C" BAND ALIGNMENT	10	Same	Same	Same	17.75 Mc	Band "C"	34.4°	Osc. RF Ant.	†C-20 C-26 C-7	Max. Out.
	11	Same	Same	Same	7.2 Mc	Same	160.3°	Osc. RF	L-17 L-10	Same
	12	Repeat Steps 10 & 11.								
"31-25M" BAND ALIGNMENT	13	Same	Same	Same	9.5 Mc	31-25 Meter Band	159.6°	Osc. RF Ant.	*C-17 *C-11 *C-3	Same
	14	Same	Same	Same	11.8 Mc	31-25 Meter Band	44.8°	Osc. RF Ant.	‡L-18 ‡L-11 ‡L-5	Same
	15	Repeat Steps 13 & 14.								
"19-16M" BAND ALIGNMENT	16	Same	Same	Same	17.75 Mc	19-16 Meter Band	37.5°	Osc. RF Ant.	†C-23 C-27 C-10	Same
	17	Same	Same	Same	15.2 Mc	19-16 Meter Band	157.2°	Osc. RF Ant.	†L-19 L-12 L-6	Same
	18	Repeat Steps 16 & 17.								

† Oscillator frequency is higher than signal frequency on all bands. Use minimum capacity or minimum inductance peak on oscillator adjustments if two peaks can be obtained.

* Pre-set L18, L11 and L5, with tuning condenser at minimum capacity (0), so that the cores are exactly 1/8 in. (3.175 mm) from the bottom end of their respective coils (coil end to bottom end of iron core—not the insulating rod of the core assembly).

‡ If dial reading for maximum output at 11.8 mc is lower than 11.8 mc, rotate studs approx. 1/2 turn clockwise—if higher rotate approx. 1/2 turn counterclockwise.

Critical Lead Dress

1. Capacitor C37 should be soldered across the 2nd I.F. transformer lugs D and F with the shortest possible leads and away from chassis.
2. Pins No. 1 and No. 3 of the 6SF7 tube should be connected together with a bus wire; pins No. 1 and No. 3 are separately grounded to chassis.
3. Range switch shield should be grounded to the chassis on the side where the 31-25 meter band ant. coil L5 and R.F. coil L11 are located.
4. The leads to the extra speaker jack J3 should be twisted and dressed down to the chassis.
5. Capacitor C39 should be dressed between the Radio-Phono switch S7 and the chassis.
6. Resistors R13 and R23 should be grounded to a common point, nearest to the ground point of capacitor C43.
7. The lead connecting C10 to the range switch should be dressed down to the chassis and then vertically up to the proper terminal of the range switch.
8. Dress all unshielded leads and components away from pins No. 3 and 4 of the 6SC7 tube.

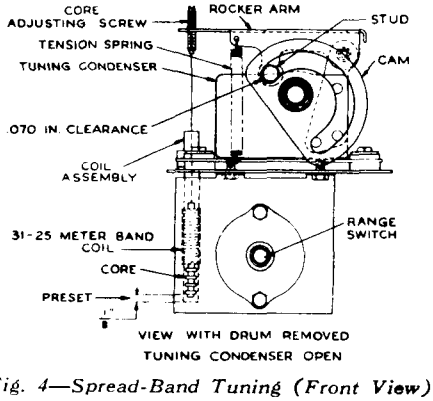

Fig. 4—Spread-Band Tuning (Front View)

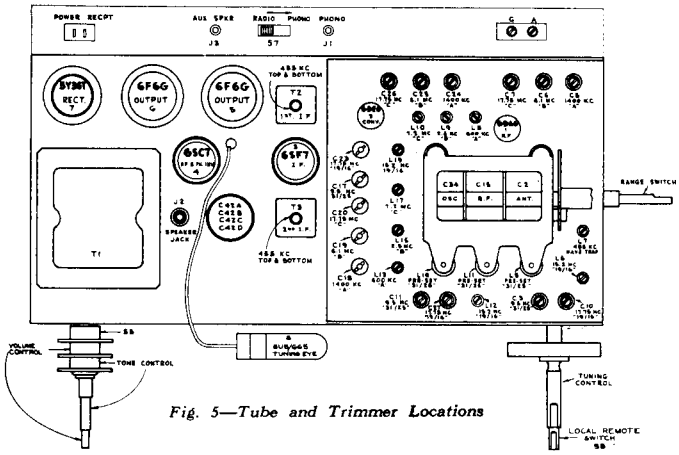

Fig. 5—Tube and Trimmer Locations

REPLACEMENT PARTS FOR MODEL 9Q53

Insist on genuine factory tested parts, which are readily identified and may be purchased from authorized dealers.

Stock No.	Description	List Price
	R.F. CHASSIS ASSEMBLIES	
S-4700	Capacitor - trimmer - two section 3-35 MMF. plus 4 minus 70 MMF (C3-C10-C11-C27)	
S-4451	Capacitor - trimmer - two sections 3-35 MMF. one section 4-75 MMF (C24-C25-C26)	
S-4701	Capacitor - trimmer - three sections of 3-35 MMF. (C5-C6-C7)	
S-4702	Capacitor - trimmer - three sections of 8-50 MMF & two sections 5-25 MMF. (C17-C18-C19-C20-C23)	
S-4703	Capacitor - ceramic - 12 MMF (C8)	
S-4518	Capacitor - ceramic - 22 MMF (C21)	
S-4704	Capacitor - ceramic - 33 MMF (C16)	
S-4705	Capacitor - ceramic - 39 MMF (C1)	
S-4899	Capacitor - ceramic - 56 MMF (C9)	
S-4900	Capacitor - ceramic - 56 MMF (C29)	
S-4521	Capacitor - ceramic -120 MMF (C22)	
S-4439	Capacitor - mica - 220 MMF (C4-C14-C28)	
S-4440	Capacitor - mica - 560 MMF (C32)	
S-4441	Capacitor - mica - 3300 MMF (C30)	
S-4442	Capacitor - mica - 6000 MMF (C31)	
	Capacitor - .01 Mfd. 400 V. 20% (C12)	
	Capacitor - .047 Mfd. 400V. 20% (C13-C33)	
S-4713	Condenser - Variable (C2-C15-C34)	
S-4524	Coil - cathode choke coil (L20)	
S-4525	Coil - oscillator "A" band with core & stud (L13-L14)	
S-4526	Coil - oscillator "B" band with core & stud (L15-L16)	
S-4527	Coil - oscillator "C" band with core & stud (L17)	
S-4528	Coil - ant. osc.; or R.F. coil (31-25 meter) (L5-L11-L18)	
S-4529	Coil - ant.; osc.; or R.F. coil (19-16 meter) (L6-L12-L19)	
S-4707	Coil - R.F. coil "A" band with core & stud (L8)	
S-4708	Coil - R.F. coil "B" band with core & stud (L9)	
S-4709	Coil - R.F. coil "C" band with core & stud (L10)	
S-4710	Coil - wave trap with core & stud (L7)	
	Resistor 10 ohms ½ watt 20% (R2)	
	" 47 " " " " (R6)	
	" 12,000 ohms 2 watt 10% (R3)	
	" 22,000 " ½ " 20% (R5)	
	" 47,000 " 1 " 20% (R4)	
	" 470,000 " ½ " 20% (R7)	
	" 1 Megohm ½ " 20% (R1)	
S-4720	Socket - tube socket for R.F. amp.	
S-4721	" - " " " converter	
S-4722	Switch - range switch (S1-S2-S3-S4)	
	MAIN CHASSIS ASSEMBLY	
S-4726	Capacitor - mica 12 MMF. 10% (C37)	
S-4727	" - " 82 " 10% (C40)	
S-4728	" - " 150 " 20% (C38)	
S-4729	" - " 330 " 20% (C45)	
	" - .003 Mfd. 600 V. 10% (C39-C47)	
	" - .004 " 600 V. 20% (C44)	
	" - .004 " 1000 V. 10% (C48-C49)	
	" - .01 " 400 V. 20% (C36-C46)	
S-4820	" - .01 " ceramic 500 V. (C51)	
	" - .01 " 600 V. 20% (C52)	
	" - .02 " 400 V. 10% (C41)	
	" - .04 " 200 V. 20% (C35)	
S-4612	" - Electrolytic 5 Mfd. 50 V. (C43)	
S-4733	" - " 40 Mfd. 450 V. (2) 10 Mfd. 300 V. (1) 20 Mfd. 50 volts (1) (C42A-C42B-C42C-C42D)	
S-4546	Coil - antenna coil - A-B-C bands (L1-L2-L3-L4)	
S-4739	Indicator - band indicator (plastic)	
S-4757	" - station selector pointer	
	Resistor - 470 ohms 2 watt 10% (R26)	
	" - 1200 " ½ " 10% (R13)	
	" - 2200 " ½ " 20% (R9)	
	" - 2700 " ½ " 10% (R18-R19)	

Stock No.	Description	List Price
	MAIN CHASSIS ASSEMBLY (Cont'd.)	
	Resistor - 10,000 ohms ½ watt 10% (R23)	
	" - 12,000 " 2 " 10% (R25)	
	" - 15,000 " ½ " 10% (R15)	
	" - 22,000 " ½ " 20% (R11)	
	" - 100,000 " ½ " 20% (R27)	
	" - 220,000 " ½ " 20% (R21)	
	" - 270,000 " ½ " 10% (R12)	
	" - 390,000 " ½ " 10% (R20)	
	" - 470,000 " ½ " 10% (R22)	
	" - 470,000 " ½ " 20% (R24)	
	" - 820,000 " ½ " 10% (R14)	
	" - 2.2 Megohms ½ " 20% (R10)	
S-4742	Socket - tube socket (octal)	
S-4904	Switch - radio phono switch (S7)	
S-4743	Switch - local remote switch (S8)	
S-4539	Transformer 1st I.F. (T2)	
S-4571	" 2nd I.F. (T3)	
S-3591	" -power 60 cycles (T1)	
S-3592	" - " 25 " (T1)	
S-4735	Volume Control & power switch (R16-R17-S5)	
	SPEAKER ASSEMBLY	
13867	Dust Cap (Pkg. 5)	
S-4748	Cone - cone & voice coil assy	
S-4491	Plug - pin plug for connecting cable	
S-4744	Output transformer (T4)	
	MISCELLANEOUS ASSEMBLIES	
S-4902	Board - antenna & ground terminal bd.	
S-4723	Bracket - dial cord bracket & pulley (L.H.)	
S-4724	" - " " " " pulleys (R.H.)	
S-4750	Baffle - baffle board & grille cloth assy	
S-4751	Bezel - dial bezel	
S-4725	Cable - tuning eye cable & socket with resistor	
S-4752	Clip - dial cover retaining clip (Pkg. 3)	
S-4753	Cover - back cover for cabinet	
S-4754	Cover - plastic dial cover	
S-4711	Core - adjustable core & stud for 31-25 meter band antenna or RF coils	
S-4712	Core - adjustable core & stud for 31-25 meter band osc. coil	
S-4734	Collar - band indicator retaining collar	
S-4736	Cord - dial cord	
S-4313	Cord - band indicator cord	
S-4548	Cord - power cord	
S-4755	Dial - glass dial scale	
S-4737	Drum - band indicator drum	
S-4738	Drum - band indicator driving drum	
S-4714	Drum - tuning condenser drum, hub & cam assy.	
S-4901	Grommet - to mount tuning condenser (Pkg. 3)	
S-4905	" - to mount speaker (Pkg. 4)	
S-4500	Emblem "RCA Victor"	
S-4756	Foot, rubber foot for cabinet (Pkg. 4)	
S-4758	Knob - local - remote switch knob	
S-4759	" - tuning control knob	
S-4760	" - volume " "	
S-4762	" - range switch knob	
S-4761	" - tone control knob	
11891	Lamp - dial lamp (Mazda 44)	
31480	" - band indicator lamp (Mazda 47)	
S-4763	Plate - dial back plate	
S-4715	Plate - rocker arm plate & stud assy (less cores)	
S-4740	Receptacle - A.C. outlet	
S-4595	Shield - dial lamp shield	
S-4511	Spacer - for speaker mounting (Pkg. 4)	
S-4741	Socket - dial lamp socket & lead	
S-4480	" - phono or speaker socket	
S-4903	Spring - dial cord tension (Pkg. 3)	
S-4536	Screw - rocker arm plate bearing screw (Pkg. 2)	
S-4537	Spring - " " " tension spring	
S-4746	Washer "C" washer to retain fly wheel & tuning shaft (Pkg. 3)	
S-4747	Wheel - flywheel & tuning shaft	

All prices and parts are subject to change or withdrawal without notice.

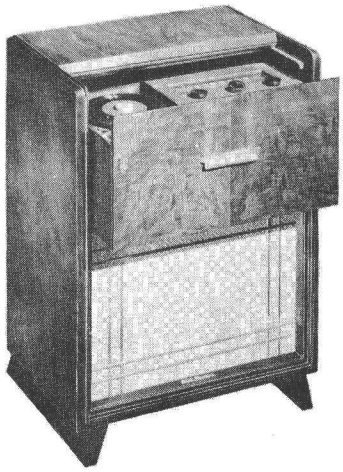

MODEL 9W63

RCA VICTOR

"HIS MASTER'S VOICE"

Radio Phonograph Combination

MODEL 9W63

SERVICE DATA

— 1949 NO. 16 —

GENERAL SERVICE DIVISION
RCA VICTOR COMPANY LIMITED
MONTREAL, CANADA

Electrical and Mechanical Specifications

Tuning Ranges

Standard Broadcast ---------- 540-1600 kc
Short Wave ---------- 5.8-18 mc
Intermediate Frequency ---------- 455 kc

Tube Complement

(1) RCA 6BE6 ---------- Converter
(2) RCA 6BA6 ---------- I.F.
(3) RCA 6AV6 ---------- Audio
(4) RCA 6C4 ---------- Driver
(5) RCA 6K6GT ---------- Output
(6) RCA 6X5GT/G ---------- Rectifier

Dial Lamps ---------- (2) Mazda 51

Tuning Drive Ratio ---------- 12 to 1 (6 turns of knob)

Power Output

Undistorted ---------- 2.5 watts
Maximum ---------- 3.5 watts

Loudspeaker

Type ---------- 12" P.M. Dynamic
Voice Coil Impedance ---------- 2.2 Ohms at 400 cycles

Power Supply Ratings

Rating A ---------- 105-125 Volts, 50 cycles, .50 Amps, 58 watts
Rating B ---------- 105-125 Volts, 25 cycles, .50 Amps, 58 watts

Cabinet Dimensions

Height ---------- 31-3/16"
Width ---------- 22¼"
Depth ---------- 15"

Phonograph

Type ---------- RP168A-1
Record capacity ---------- Ten 7 In. Records
Turntable speed ---------- 45 R.P.M.
Pickup ---------- Crystal (Medium Output)



The dial scale drawing is a full size reproduction. It can be used as a reference in alignment procedure.

FIG. 1—DIAL SCALE

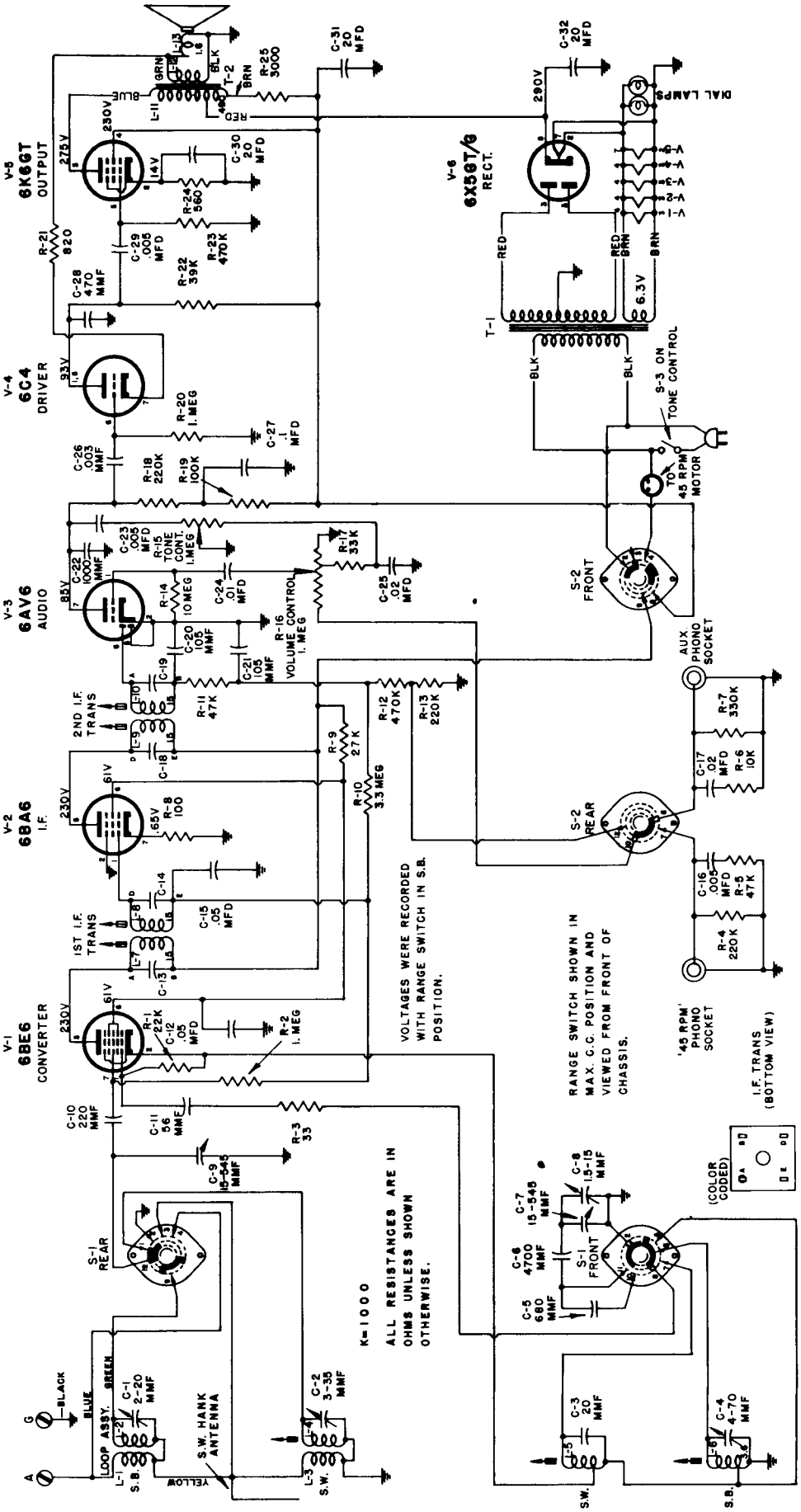

Fig. 2—SCHEMATIC DIAGRAM

SERVICE DATA

Removal of Chassis

In order to remove the chassis from the cabinet it is necessary to extend the forward displacement of the drawer. This may be accomplished by following the procedure outlined below.

(1) Remove the four screws holding the lid activating levers to the drawer base located at the bottom rear of the drawer; this enables the drawer to be extended so that the panel and the receiver may be easily removed.

(2) Remove the knobs.

(3) Remove the five screws fastening the radio panel. The panel may now be removed.

(4) Remove the two screws fastening the chassis base board to the drawer partition.

(5) Lift receiver out.

Alignment Procedure

Before aligning the receiver, set the gang condenser for maximum capacity and then set the dial cursor on the calibration point at the extreme left hand end of the dial.

When only a portion of the circuit is to be aligned select the required portion and perform all the remaining steps.

In order to obtain best results, it is advisable to align the 455 KC I.F.'s with the help of a cathode ray oscilloscope. The scope should be connected across the volume control. If this equipment is not available, use the method outlined below in the alignment chart.

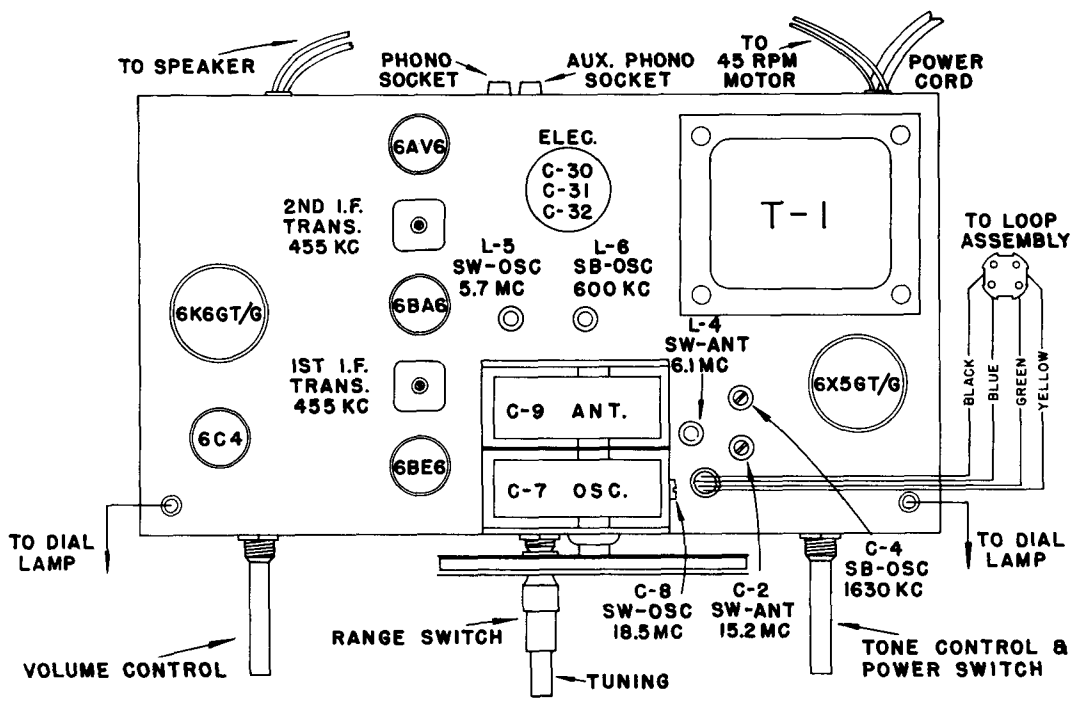

FIG. 3—CHASSIS LAYOUT AND ALIGNMENT ADJUSTMENT

ALIGNMENT CHART

ORDER OF ALIGNMENT		TEST OSCILLATOR				RECEIVER				
		CONNECT "HI" SIDE TO	CONNECT "LO" SIDE TO	DUMMY ANTENNA	FREQUENCY SETTING	RANGE SELECTOR	DIAL SETTING	CIRCUIT TO ADJUST	ADJUSTMENT SYMBOLS	NOTES
I.F. ALIGNMENT	1	Pin #1 6BA6	Gnd.	.1 mfd	455 KC	S.B.	"HI" END	2nd I.F. Trans.	Top & Bottom Slugs	Max. Out.
	2	Pin #7 6BE6	Same	Same	Same	Same	Same	1st I.F. Trans.	Top & Bottom Slugs	Same
	3	Repeat steps 1 & 2.								
S.W. ALIGNMENT	4	Ter. "A" on loop	Gnd.	300 ohms	5.7 Mc	S.W.	"LO" End	Osc.	L-5	Same
	5	Same	Same	Same	18.5 Mc	Same	"HI" End	Osc.	C-8	Same
	6	Same	Same	Same	6.1 Mc	Same	6.1 Mc	Ant.	L-4	Same
	7	Same	Same	Same	15.2 Mc	Same	15.2 Mc	Ant.	C-2	Same
	8	Repeat steps 4 to 7.								
S.B. ALIGNMENT	9	Same	Same	220 mmf	600 Kc	S.B.	600 Kc	Osc.	L-6 Rock In to Loop	Same
	10	Same	Same	Same	1630 Kc	Same	"HI" End	Osc.	C-4	Same
	11	Same	Same	Same	1500 Kc	Same	1500 Kc	Loop Trimmer	C-1*	Same
	12	Repeat steps 9 to 11								

* Align C-1 when receiver & loop assembly are in the cabinet.

REPLACEMENT PARTS FOR MODEL 9W63

Insist on genuine factory tested parts, which are readily identified and may be purchased from authorized dealers.

Stock No.	Description	List Price
	CHASSIS ASSEMBLY	
S-5363	Capacitor - Trimmer (C2, C4)	
31871	" - Ceramic 20 MMF, 5% 500 V.(C3)	
S-4221	" " 220 MMF 20%, 350 V.(C10)	
S-4819	" " 470 MMF 20%, 350 V.(C28)	
14498	" - Mica - 680 MMF 5%, 500 V.(C5)	
S-5370	" - Ceramic 1000 MMF,20%, 350 V.(C22)	
S-4523	Capristor - 56 MMF and 33 Ohms (C11,R-3)	
S-4614	" - 2 of 105 MMF & 1-47000 Ohms(C20,C21,R11)	
39668	Capacitor - Mica - 4700 MMF, 5%, 500 V.(C6)	
	Capacitor - Paper .005 MFD 20% 400 V. (C23,C29)	
	" " .005 " 10% 200 V. (C16)	
	" " .003 " 20% 400 V. (C26)	
	" " .05 " 20% 400 V. (C12)	
	" " .05 " 20% 200 V. (C15)	
	" " .02 " 10% 200 V. (C17-C25)	
	" " .01 " 20% 400 V. (C24)	
	" " .1 " 20% 400 V. (C27)	
S-5360	Condenser & Drum (C2,C9,C7,C8)	
S-5362	Capacitor - Electrolytic 20-20-20 mfd.(C30,C31,C32)	
S-5351	Coil - S.W. Antenna Coil (L3-L4)	
S-5352	" BC Oscillator coil(L6)	
S-5353	" S.W. " coil(L5)	
	Resistor - 100 Ohms 20% 1/4 watt (R8)	
	" 560 " 10% 1/2 " (R24)	
	" 820 " 10% 1/4 " (R21)	
	" 3000 " 5% 1 " (R25)	
	" 10,000 " 10% 1/4 " (R6)	
	" 22,000 " 20% 1/4 " (R1)	
	" 27,000 " 10% 1 " (R9)	
	" 33,000 " 10% 1/4 " (R17)	
	" 39,000 " 10% 1/2 " (R22)	
	" 47,000 " 10% 1/4 " (R5)	
	" 100,000 " 20% 1/4 " (R19)	
	" 220,000 " 10% 1/4 " (R13)	
	" 220,000 " 20% 1/4 " (R4,R18)	
	" 330,000 " 10% 1/4 " (R7)	
	" 470,000 " 10% 1/4 " (R23)	
	" 470,000 " 20% 1/4 " (R12)	
	" 1 Megohm 20% 1/4 " (R2,R20)	
	" 3.3 " 20% 1/4 " (R10)	
	" 10 " 20% 1/4 " (R14)	

Stock No.	Description	List Price
	CHASSIS ASSEMBLY (Cont'd)	
S-5358	Switch - Range (S-1, S-2)	
S-5344	Socket - Phono socket - dual	
S-4378	Transformer - Power 60 cycle (T-1)	
S-4380	" " 25 cycle (T-1)	
S-4487	" - 1st I.F. (C13,C14,L7,L8)	
S-4662	" - 2nd I.F. (C18,C19,L-9,L-10)	
S-5269	Tone Control (R15,S-3) 1.0 Megohm	
S-5356	Volume Control (R16) 1.0 "	
S-5359	Transformer, Output - (T-2)(L-11,L-12)	
	SPEAKER ASSEMBLY 12"	
S-3568	Cone - Cone & Voice Coil Ass'y (L-13)	
	MISCELLANEOUS ASSEMBLY	
S-4313	Cord - dial cord	
S-5350	Dial Scale	
S-5323	Decal	
S-4390	Knob - Walnut	
S-4387	" "	
S-3870	" "	
S-5275	" - Mahogany	
S-5277	" "	
S-5279	" "	
S-5276	" Blonde	
S-5278	" "	
S-5280	" "	
S-5354	Loop - Loop assembly (L1, L2)	
S-5272	Pointer	
	AUTOMATIC RECORD CHANGER	
	Refer to RP168 Series Service Note for replacement parts and service data.	

Only items listed under stock numbers are available as Replacement Parts.
All parts and prices subject to change or withdrawal without notice.

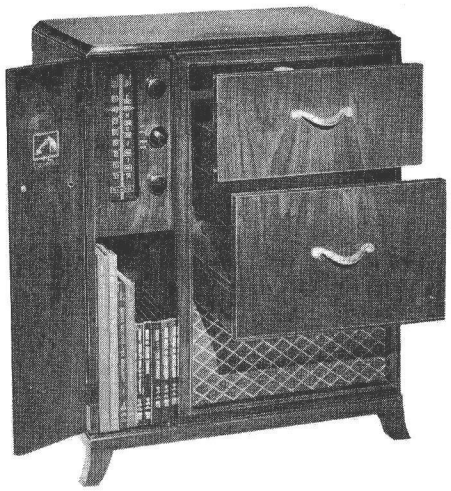

Model 9W653

RCA VICTOR

"HIS MASTER'S VOICE"

RADIO & DUAL PHONOGRAPH COMBINATION

MODEL 9W65

SERVICE DATA

—1949 No. 23—

GENERAL SERVICE DIVISION
RCA VICTOR COMPANY LIMITED
MONTREAL, QUE.

Electrical and Mechanical Specifications

TUNING RANGES
Standard Broadcast ----------540-1600 K.C.
Short Wave ----------5.8-18 MC.
Intermediate Frequency ----------455 K.C.

TUBE COMPLEMENT
(1) RCA 6BE6 ----------Converter
(2) RCA 6BA6 ----------I.F.
(3) RCA 6AV6 ----------Audio
(4) RCA 6C4 ----------Driver
(5) RCA 6K6GT ----------Output
(6) RCA 6X5GT ----------Rectifier
Dial Lamps ----------(2) Mazda 51
Tuning Drive Ratio ----------12 to 1 (6 turns of knob)

POWER OUTPUT
Undistorted ----------2.5 watts
Maximum ----------3.5 watts

LOUDSPEAKER
Type ----------8 inch P.M.
Voice coil impedance ----------2.2 ohms at 400 cycles

POWER SUPPLY RATINGS
Rating A—105-125 volts, 60 cycles, .50 Amps., 58 watts
Rating B—105-125 volts, 25 cycles, .50 Amps., 58 watts

CABINET DIMENSIONS
Height ----------31"
Width ----------26½"
Depth ----------16½"

PHONOGRAPH (RP-168A)
Record capacity ----------Ten 7 in.
Turntable speed ----------45 R.P.M.
Pickup ----------.6 volts at 1000 cycles across 1 Megohm load

PHONOGRAPH (RP-178)
Record capacity ----------Ten twelve inch or twelve ten inch
Turntable speed ----------78 R.P.M.
Pickup----------1.4 volts at 4000 cycles across 500,000 ohm load

Refer to the RP168 and RP178 Service Notes for information on the 45 and 78 R.P.M. record changers respectively.

Refer to the 9W63 Service Note for detailed information on the 9W65.

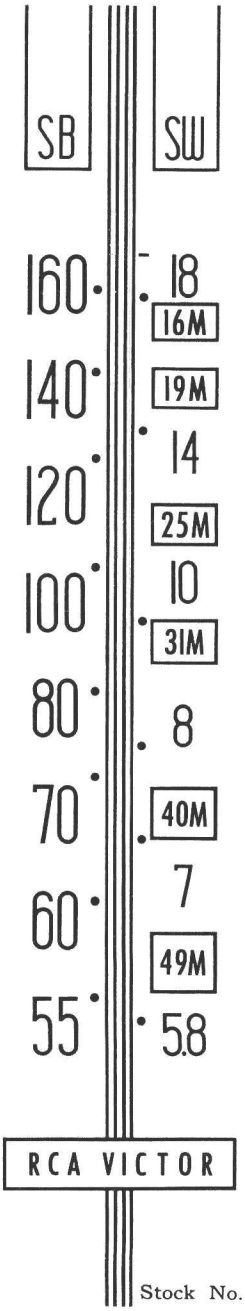

Stock No. S-5342

Fig. 1.—The Dial Scale Drawing shown is a full size reproduction. It can be used as a reference in alignment procedure.

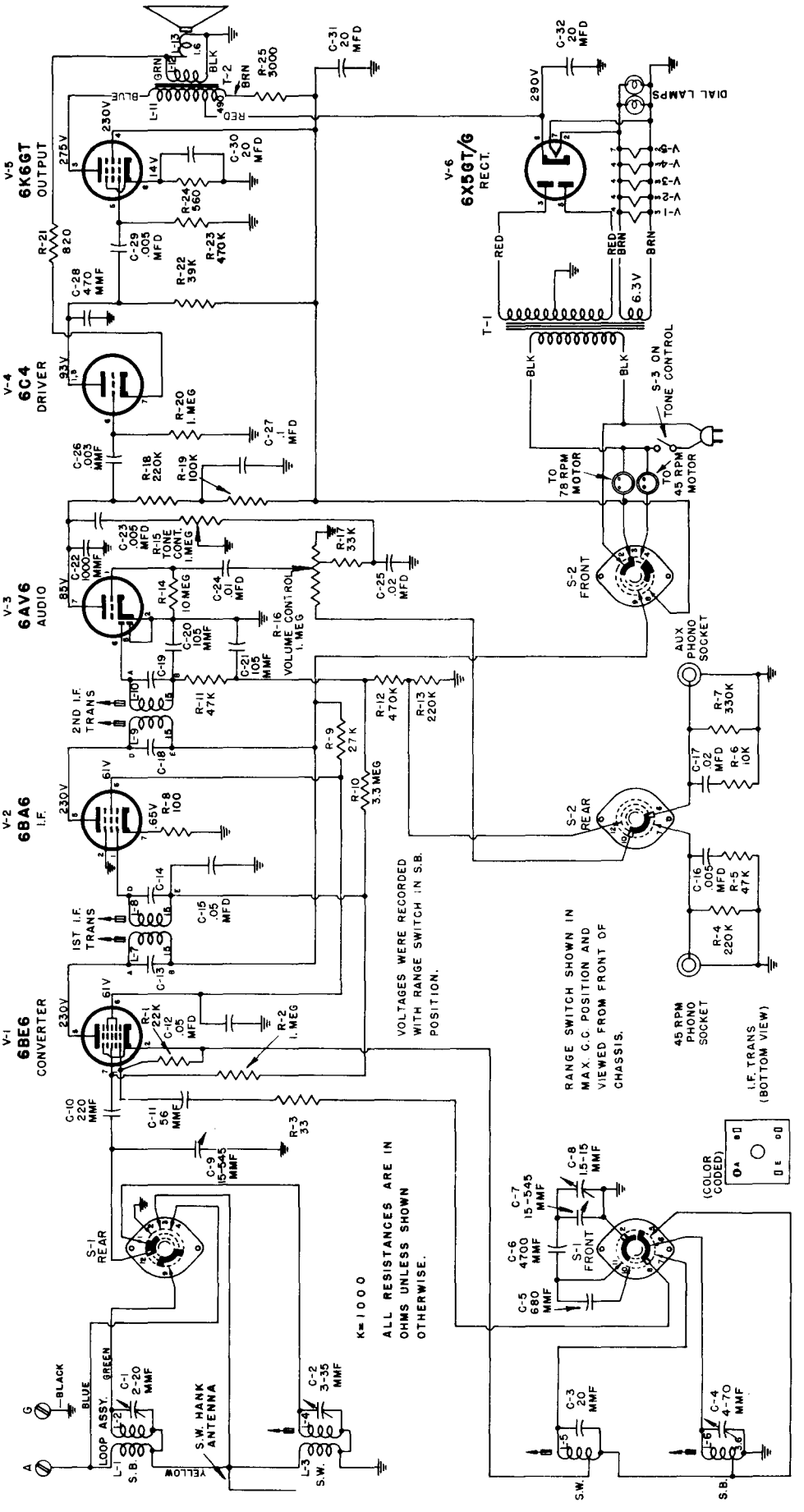

Fig. 2.—Schematic Diagram.

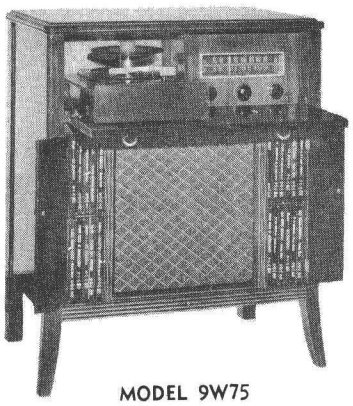

MODEL 9W75

RCA VICTOR

RADIO PHONOGRAPH COMBINATION

MODEL 9W75

SERVICE DATA

— 1949 NO. 19 —

GENERAL SERVICE DIVISION
RCA VICTOR COMPANY LIMITED
MONTREAL, QUE.

Electrical and Mechanical Specifications

Tuning Ranges:

Standard Broadcast ---------- 540-1600 KC.
Short Wave ---------- 5.8-18.2 MC.
Intermediate Frequency ---------- 455 KC.

Tube Complement

(1) RCA 6BE6 ---------- Converter
(2) RCA 6BA6 ---------- I.F.
(3) RCA 6AV6 ---------- Phase Inverter & A.V.C.
(4) RCA 6AV6 ---------- Audio
(5) RCA 6V6GT ---------- Output
(6) RCA 6V6GT ---------- Output
(7) RCA 6X5GT/G ---------- Rectifier

Dial Lamps ---------- (3) Mazda 51

Tuning Drive Ratio ---------- 10 to 1 (5½ turns of knob)

Power Output

Undistorted ---------- 5.5 watts
Maximum ---------- 7.5 watts

Loudspeaker

Type ---------- 12" P.M.
Voice coil impedance ---------- 2.2 ohms at 400 cys.

Power Supply Ratings

Rating A—105—125 volts, 60 cycles, .55 amps, 64 watts
Rating B—105—125 volts, 25 cycles, .55 amps, 64 watts

Cabinet Dimensions

Height ---------- 33"
Width ---------- 28⅞"
Depth ---------- 16"

Phonograph

Type ---------- RP168A-1
Record capacity ---------- Ten 7 in.
Turntable Speed ---------- 45 R.P.M.
Pickup ---------- Crystal (Medium output)

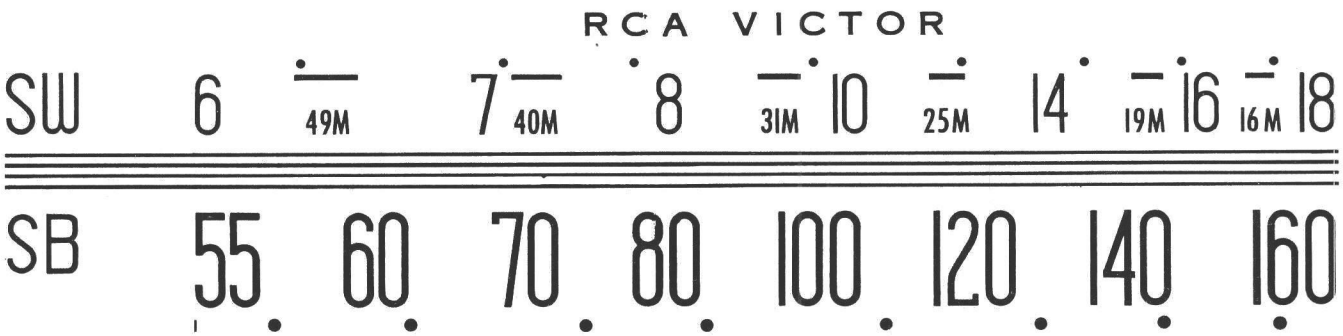

The Dial Scale drawing shown is a full size reproduction. It can be used as a reference in alignment procedure.

Fig. 1—Dial Scale

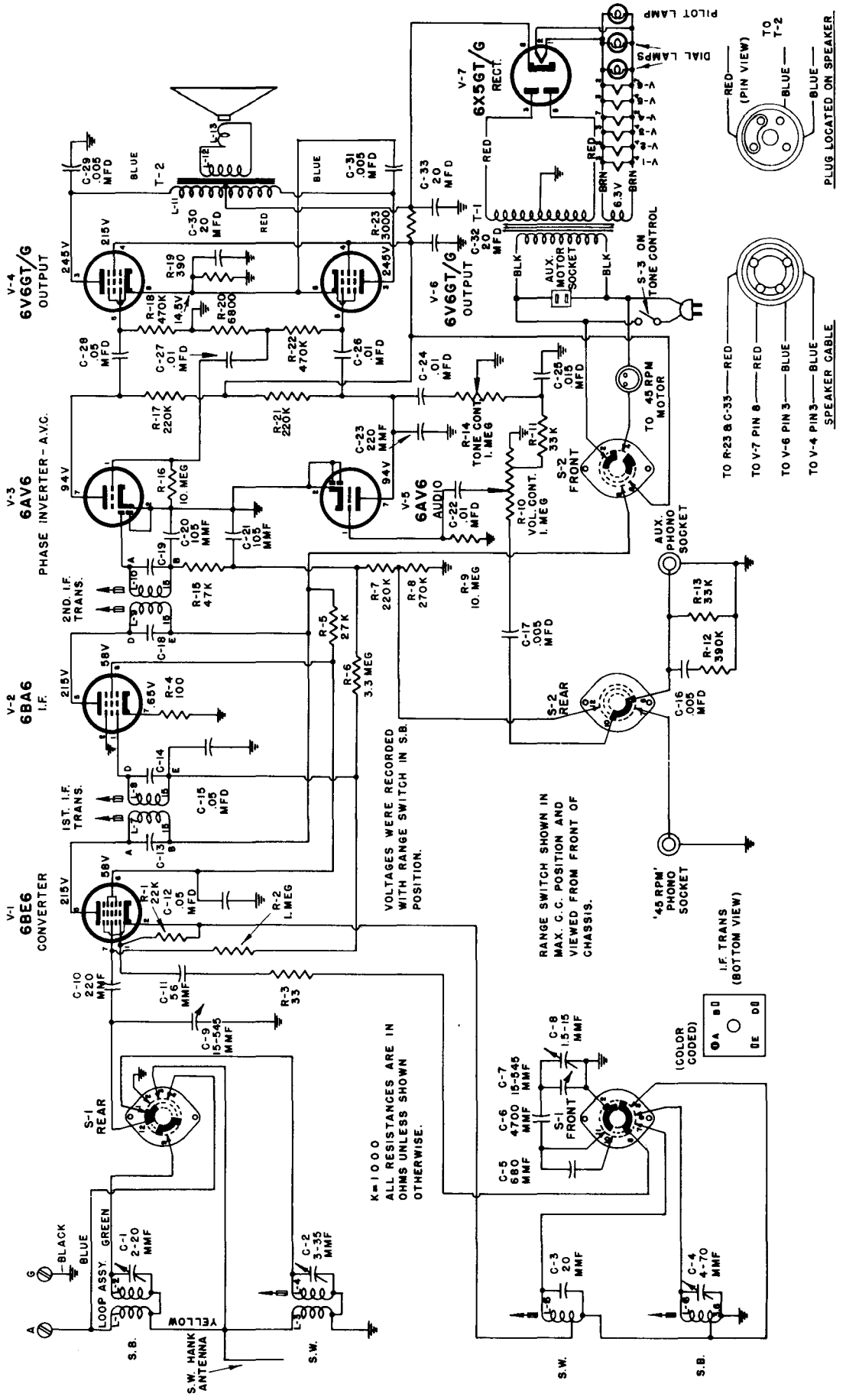

FIG. 2. SCHEMATIC DIAGRAM

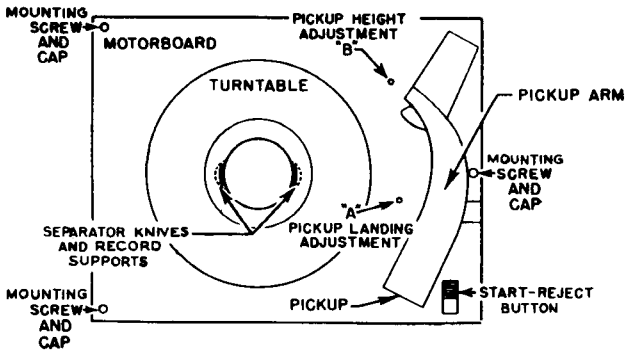

FIG. 3—TOP VIEW RP168A-1 RECORD CHANGER

Pickup Landing Adjustment "A"

The pickup point should land half-way between the outer edge of the record and the first music groove.

If the pickup lands inside the starting grooves—turn screw "A" slightly clockwise. If pickup lands outside the starting grooves—turn screw "A" slightly counterclockwise.

Pickup Height Adjustment "B"

During cycle the pickup arm must rise high enough to clear a stack of ten records on the turntable, but not high enough to cause the top of the arm to touch records resting on the record supports.

If pickup does not clear a stack of ten records—turn screw "B" slightly clockwise. If pickup arm touches records on record supports—turn screw "B" slightly counterclockwise.

Record Separators

In the out of cycle position the record separator knives or discs are normally concealed inside the center post. During service, the position of the star wheel on the underside of the record changer may be accidentally shifted; this may cause the separator knives to be extended when they should be concealed.

If the separator knives are thus extended—turn the power on so that the turntable is revolving, gently press fingers against the extended knives until they disappear inside the center post—DO THIS ONLY WHILE MECHANISM IS OUT OF CYCLE.

Care of Sapphire

The record changer sapphire is protected by a permanent metal guard. LINT MAY COLLECT TO CLOG THE OPENING IN THE GUARD AT THE SAPPHIRE POINT AND CAUSE POOR RECORD REPRODUCTION. This may require occasional cleaning of the guard opening—clean by carefully brushing with a small soft brush.

Critical Lead Dress

Dress the blue and the green leads, from the terminal board to the tone control, away from each other.

Alignment Procedure

Before aligning the receiver, set the gang condenser for maximum capacity and then set the dial cursor on the calibration point at the extreme left hand end of the dial.

When only a portion of the circuit is to be aligned select the required portion and perform all the remaining steps.

In order to obtain best results, it is advisable to align the 455 KC I.F.'s with the help of a cathode ray oscilloscope. The scope should be connected across the volume control. If this equipment is not available, use the method outlined below in the alignment chart.

ALIGNMENT CHART

Order of Alignment		TEST OSCILLATOR				RECEIVER				
		Connect "HI" Side To	Connect "LO" Side To	Dummy Antenna	Frequency Setting	Range Selector	Receiver Dial Setting	Circuit To Adjust	Adjustment Symbols	Notes
I.F. Alignment	1	V-2, 6BA6 Pin #1	GND	.1MFD.	455 KC	S.B.	"HI" End	2nd I.F. Trans.	L-9, L-10	Max. Out.
	2	V-1, 6BE6 Pin #7	Same	Same	Same	Same	Same	1st I.F. Trans.	L-7, L-8	Same
	3	Repeat Steps 1 and 2.								
S.W. Alignment	4	"Ant" Terminal	GND	360 OHMS	5.7 MC	S.W.	"LO" End	S.W. Osc.	L-5	Same
	5	Same	Same	Same	6.1 MC	Same	6.1 MC	S.W.-Ant.	L-4	Same
	6	Same	Same	Same	18.5 MC	Same	"HI" End	S.W.-Osc.	C-8	Same
	7	Same	Same	Same	15.2 MC	Same	15.2 MC	S.W.-RF	C-2	Same
	8	Repeat steps 4 to 7								
S.B. Alignment	9	"Ant" Terminal	GND	220 MMF	600 KC	S.B.	600 KC	S.B.-Osc.	L-6 (Rock In)	Same
	10	Same	Same	Same	1630 KC	Same	"HI" End	S.B.-Osc.	C-4	Same
	11	Same	Same	Same	1500 KC	Same	1500 KC	S.B.-Ant.	C-1*	Same
	12	Repeat steps 9 to 11								

* It is advisable to Align C-1 when the loop antenna & receiver are both in the cabinet.

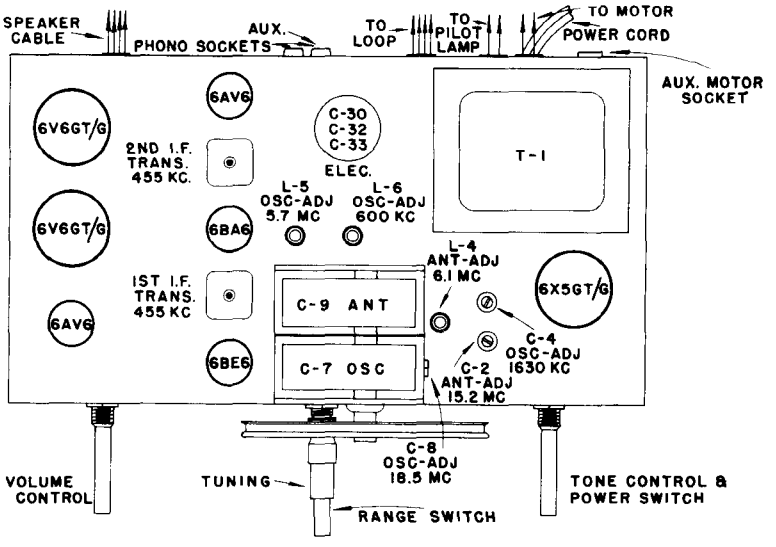

FIG. 4—CHASSIS LAYOUT AND ALIGNMENT ADJUSTMENT

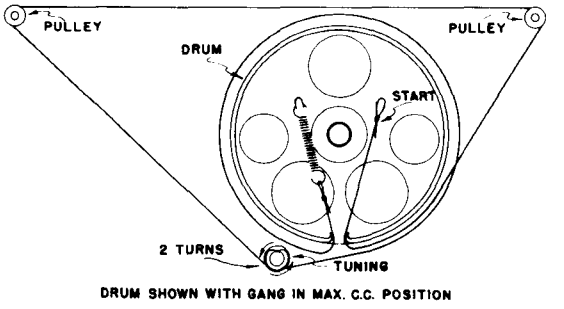

FIG. 5—DIAL CORD STRINGING

REPLACEMENT PARTS FOR MODEL 9W75

Insist on genuine factory tested parts, which are readily identified and may be purchased from authorized dealers.

Stock No.	Description	List Price
	Chassis Assembly	
S-4514	Capacitor - trimmers, 2 section, 3-35 MMF. & 4 - 70 MMF. (C-2, C-4)	
31871	" - ceramic, 20 MMF. +- 5% (C-3)	
S-4523	Capristor - 56 MMF. and 33 ohms (C-11, R-3)	
S-4614	" - 2 - 105 MMF. & 1 - 47,000 ohms (C-20,C-21,R-15)	
S-4221	Capacitor - Ceramic, 220 MMF. +- 20% (C-10,C-23)	
14498	" - Mica, 680 MMF. +- 5% (C-5)	
39668	" - " 4700 MMF. +- 5% (C-6)	
--	" - Paper .005 Mfd. +- 20%, 200 V. (C17)	
--	" - " .005 Mfd. +- 10%, 400 V. (C16)	
--	" - " .005 Mfd. +- 10%, 1000 V. (C-29, C-31)	
--	" - " .01 Mfd. +- 20%, 200 V. (C-22, C-27)	
--	" - " .01 Mfd. +- 10%, 400V. (C24)	
--	" - " .01 Mfd. +- 20%, 400 V. (C26)	
--	" - " .015 Mfd. +- 10%, 200 V. (C25)	
--	" - " .05 Mfd. +- 20%, 200 V. (C15)	
--	" - " .05 Mfd. +- 20%, 400 V. (C-12 C-28)	
S-5273	" - Electrolytic, 3 sections 20 Mfd., 400 V. (C-33) 20 Mfd., 350 V. (C-32) 20 Mfd., 25 V. (C-30)	
S-5360	Condenser & drum (C-9, C-7, C-8)	
S-5356	Control - volume control (R-10)	
S-5269	" - tone control & power switch (R-14,S-3)	
S-5351	Coil - S.W. ant. coil (L-3, L-4)	
S-5352	" - S.B. osc. coil (L-6)	
S-5353	" - S.W. Osc. coil (L-5)	
--	Resistor - 100 ohms, +- 20%, ½ watt (R-4)	
--	" - 390 " +- 10%, ½ " (R-19)	
--	" - 3000 " +- 5% 2 watts (R-23)	
--	" - 6800 " +- 10% ½ watt (R-20)	
--	" - 22000 " +- 20% ½ " (R-1)	
--	" - 27000 " +- 10% 2 watts (R-5)	
--	" - 33000 " +- 10% ½watt (R-11,R-13)	
--	" - 220,000 ohms +- 10% ½ watt (R-7)	
--	" - 220,000 " +- 20% " " (R17,R21)	
--	Resistor - 270,000 ohms +- 10% ½ watt (R-8)	
--	" - 390,000 " +- 10% " " (R-12)	
--	" - 470,000 " +- 10% " " (R-22)	
--	" - 470,000 " +- 20% " " (R-18)	
--	" - 1.0 Megohm +- 20% " " (R-2)	
--	" - 3.3 " +- 20% " " (R-6)	
--	" - 10.0 " +- 20% " " (R16,R22)	
S-5358	Switch - Range switch (S-1, S-2)	
S-4487	Transformer - 1st I.F. transformer (L-7, L-8, C-13, C-14)	
S-4662	" - 2nd I.F. transformer (L9, L10, C18, C19)	
S-4379	" - power (60 cycles) T-1	
S-4381	" - power (25 ") T-1	
	Speaker Assembly	
S-3568	Cone & voice coil assembly (L-13)	
S-5387	Transformer - output transformer (T-2)	
	Record Changer Mechanism	
	Refer to RP-168 series record changer Service Note	
	Miscellaneous Assemblies	
S-4313	Cord - dial cord (Standard)	
S-5388	Decalcomania	
S-5263	Dial scale	
S-5389	Grille Cloth	
S-4390	Knob - walnut	
S-5275	" - mahogany	
S-5276	" - blonde	
S-4387	" - walnut	
S-5277	" - mahogany	
S-5278	" - blonde	
S-3870	" - walnut	
S-5279	" - mahogany	
S-5280	" - blonde	
S-5354	Loop - loop assembly (L-1, L-2)	
S-5272	Pointer - station selector pointer	

Only items listed under stock numbers are available as Replacement Parts.

All parts and prices subject to change or withdrawal without notice.



Model 9W91

9W91

RCA VICTOR

"HIS MASTER'S VOICE"

RADIO-PHONOGRAPH COMBINATION

MODEL 9W91 SERVICE DATA

—1949 NO. 15—

GENERAL SERVICE DIVISION
RCA VICTOR COMPANY LIMITED
MONTREAL, CANADA

Electrical and Mechanical Specifications

TUNING RANGE

Standard Broadcast ---------- 540-1600 KC
Short Wave ---------- 5.8-18.2 MC
Intermediate Frequency ---------- 455 KC

TUBE COMPLEMENT

(1) Type 6BA6 ---------- R.F. Amplifier
(2) Type 6BE6 ---------- Converter
(3) Type 6BA6 ---------- I.F. Amplifier
(4) Type 6AV6 ---------- Audio
(5) Type 6AV6 ----------Det. A.V.C. Phase Inverter
(6) Type 6C4 ---------- Driver
(7) Type 6V6GT ---------- Output
(8) Type 6V6GT ---------- Output
(9) Type 5Y3GT ---------- Rectifier

Dial Lamps (2) ----------Mazda 51

Pilot Lamp ----------Mazda 51

Tuning Drive Ratio ----------19:1 (9½ turns of knob)

POWER SUPPLY RATING

Rating A—105-125 Volts, 60 cycles, .75 amps.----86 watts
Rating B—105-125 Volts, 25 cycles, .75 amps.----86 watts

LOUDSPEAKER

Size and type ----------12 in. P.M.
Voice coil impedance ----------2.2 ohms at 400 cycles

POWER OUTPUT

Undistorted ---------- .7 watts
Maximum ---------- 10 watts

RECORD CHANGER (RP-168-1)

Turntable speed ----------45 r.p.m.
Record capacity ----------Eight. 7 in.—long playing
Pickup ---------- Crystal (Medium output)

CABINET DIMENSIONS

Height ----------34 in.
Width ----------32 in.
Depth ----------16 in.

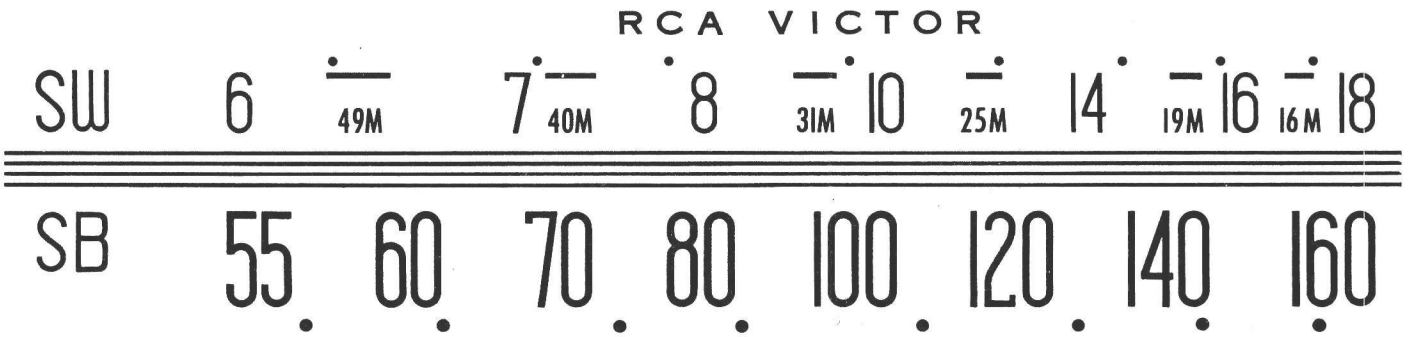

The Dial Scale drawing shown is a full size reproduction. It can be used as a reference in alignment procedure.

Fig. 1—Dial Scale

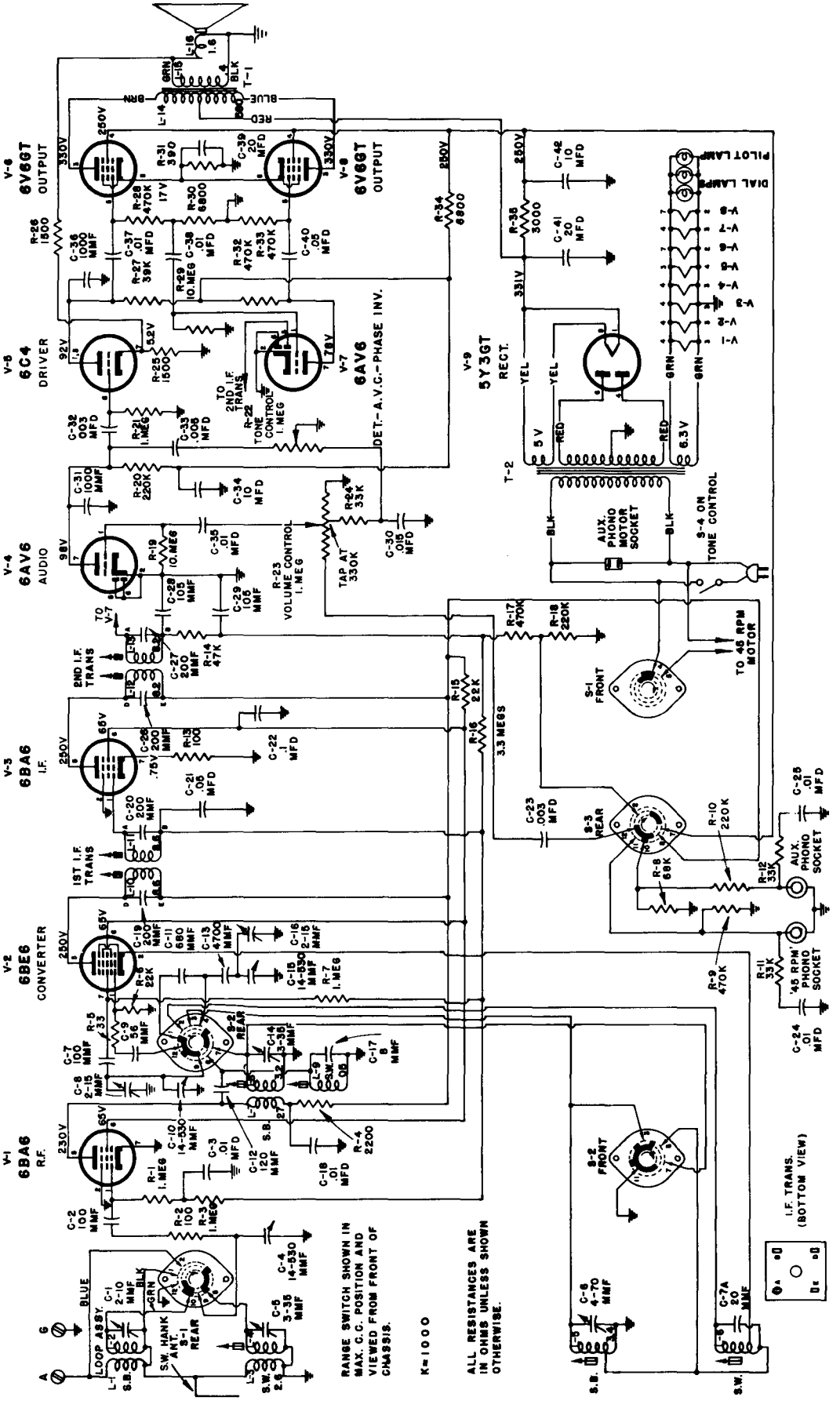

Fig. 2—Schematic Diagram

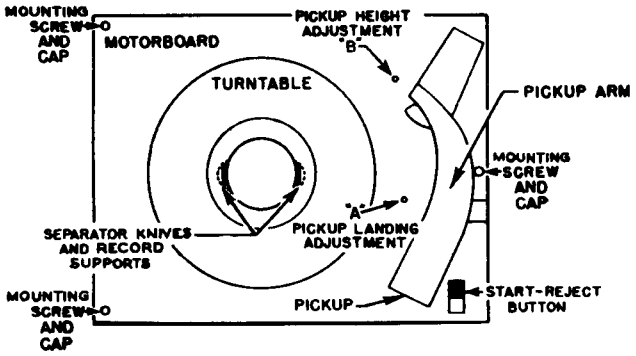

Fig. 3—Top View RP1681A-1 Record Changer

Pickup Landing Adjustment "A"

The pickup point should land half-way between the outer edge of the record and the first music groove.

If the pickup lands inside the starting grooves—turn screw "A" slightly clockwise. If pickup lands outside the starting grooves—turn screw "A" slightly counterclockwise.

Pickup Height Adjustment "B"

During cycle the pickup arm must rise high enough to clear a stack of eight records on the turntable, but not high enough to cause the top of the arm to touch records resting on the record supports.

If pickup does not clear a stack of eight records—turn screw "B" slightly clockwise. If pickup arm touches records on record supports—turn screw "B" slightly counterclockwise.

Record Separators

In the out of cycle position the record separator knives or discs are normally concealed inside the center post. During service, the position of the star wheel on the underside of the record changer may be accidentally shifted; this may cause the separator knives to be extended when they should be concealed.

If the separator knives are thus extended—turn the power on so that the turntable is revolving, gently press fingers against the extended knives until they disappear inside the center post — DO THIS ONLY WHILE MECHANISM IS OUT OF CYCLE.

Care of Sapphire

The record changer sapphire is protected by a permanent metal guard. LINT MAY COLLECT TO CLOG THE OPENING IN THE GUARD AT THE SAPPHIRE POINT AND CAUSE POOR RECORD REPRODUCTION. This may require occasional cleaning of the guard opening—clean by carefully brushing with a small soft brush.

CRITICAL LEAD DRESS

1—Dress green loop lead away from chassis.
2—Dress black and blue loop leads away from green lead.
3—Keep C-13 leads as short as possible, and dress away from chassis.
4—Dress blue lead, from R.F. section of the gang (C-10) to S-2 pin #9, to chassis.

ALIGNMENT PROCEDURE

Before aligning the receiver, set the gang condenser for maximum capacity and then set the dial cursor on the calibration point at the extreme left hand end of the dial.

When only a portion of the circuit is to be aligned select the required portion and perform all the remaining steps.

In order to obtain best results, it is advisable to align the 455 KC I.F.'s with the help of a cathode ray oscilloscope. The scope should be connected across the volume control. If this equipment is not available, use the method outlined below in the alignment chart.

ALIGNMENT CHART

Order of Alignment		TEST OSCILLATOR				RECEIVER				
		Connect "HI" Side To	Connect "LO" Side To	Dummy Antenna	Frequency Setting	Range Selector	Receiver Dial Setting	Circuit To Adjust	Adjustment Symbols	Notes
I.F. Alignment	1	V-3, 6BA6 Pin #1	GND	.1MFD	455KC	S.B.	"LO" End	2nd I.F. Trans.	L-12, L-13	Max. Out.
	2	V-2, 6BE6 Pin #7	Same	Same	Same	Same	Same	1st I.F. Trans.	L-10, L-11	Same
	3	Repeat steps 1 and 2.								
S.W. Alignment	4	"Ant" Terminal	GND	300 OHMS	6.1 MC	S.W.	Same	S.W. Osc.	L-6	Same
	5	Same	Same	Same	Same	Same	6.1 MC	S.W.-R.F.	L-9	Same
	6	Same	Same	Same	Same	Same	Same	S.W.-Ant.	L-4	Same
	7	Same	Same	Same	17.75 MC	Same	17.75 MC	S.W. Osc.	C-16	Same
	8	Same	Same	Same	Same	Same	Same	S.W.-RF	C-9	Same
	9	Same	Same	Same	Same	Same	Same	S.W.-Ant.	C-3 (Rock In)	Same
	10	Repeat steps 4 to 9.								
S.B. Alignment	11	"Ant" Terminal	GND	220 MMF	600 KC	S.B.	"LO" End	S.B.-Osc.	L-5	Same
	12	Same	Same	Same	Same	Same	600 KC	S.B.-R.F.	L-8	Same
	13	Same	Same	Same	1599 KC	Same	1500 KC	S.B.-Osc.	C-6	Same
	14	Same	Same	Same	Same	Same	Same	S.B.-R.F.	C-14	Same
	15	Same	Same	Same	Same	Same	Same	S.B.-Ant.	C-1 *	Same
	16	Repeat Steps 11 to 15								

* It is advisable to Align C-1 when the loop antenna & receiver are both in the cabinet.

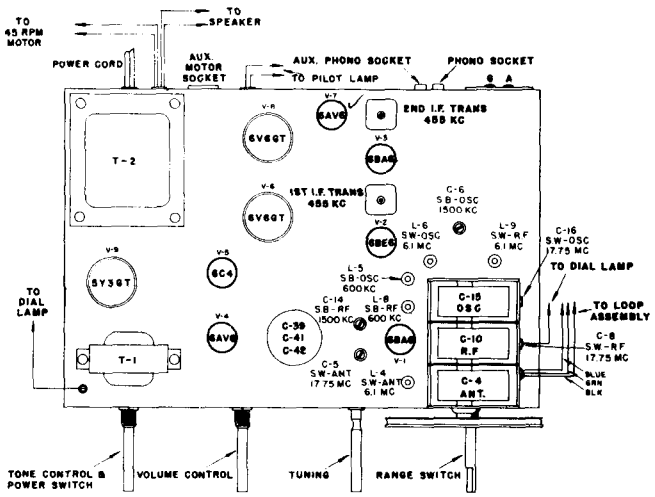

Fig. 4—Chassis Layout and Alignment Adjustments.

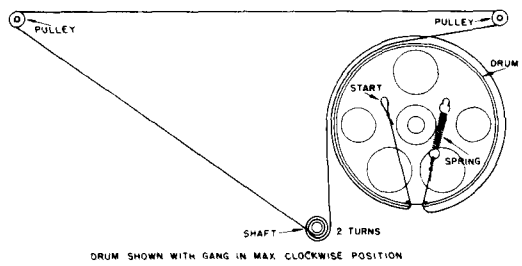

Fig. 5—Dial Cord Stringing.

REPLACEMENT PARTS FOR MODEL 9W91

Insist on genuine factory tested parts, which are readily identified and may be purchased from authorized dealers.

Stock No.	Description	List Price
	CHASSIS ASSEMBLY	
S-5093	Capacitor - Trimmer (C-5) (C-14)	
S-5094	" - " (C-6)	
70597	" - Ceramic 8 MMF., 500 V., + - 10% (C-17)	
31871	" - " 20 MMF., 500 V., + - 5% (C-7A)	
S-4523	" - 56 MMF., 500 V., + - 10% and 33 ohm ½ watt (C-9)(R-5)	
73152	" - Ceramic 100 MMF., 500 V., + - 20% (C-2,C-7)	
S-4614	" - 2 (105) MMF., 500 V. and 4700 ohms ½ watt (C-28, C-29, R14)	
71614	" - Ceramic 120 MMF., 500 V., + - 10% (C-12)	
14498	" - Mica 620 MMF., 300 V., + - 5% (C11)	
S-5370	" - (Ceramic 1,000 MMF., 350 V., + -20% (C-31, C-36)	
39668	" - Mica 4700 MMF., + - 5% 500 V., (C-13)	
	" - Paper .003 Mfd.,+ -20% 200 V.,(C-23)	
	" - " .003 Mfd.,+ -20% 400 V.,(C-32)	
	" - " .005 Mfd.,+ -20% 400 V.,(C-33)	
	" - " .01 Mfd.,+ -20% 200 V., (C24, C25)	
	" - " .01 Mfd.,+ -10% 200 V.,(C-35)	
	" - " .01 Mfd.,+ -20% 400 V.,(C-3 C-37)	
	" - " .015 Mfd.,+ -20% 200 V.,(C-30)	
	" - " .05 Mfd.,+ -20% 200 V.,(C-21)	
	" - " .05 Mfd.,+ -20% 400 V.,(C-40)	
	" - " .1 Mfd.,+ -20% 400 V.,(C-22)	
S-5092	" - Electrolytic 10 Mfd., 400 V. (C-34)	
	10 Mfd., 400 V. (C-42)	
	20 Mfd., 400 V. (C-41)	
	20 Mfd., 25 V. (C-29)	
S-5081	Coil - S.B. R.F. Coil (L-7, L-8)	
S-5083	" - S.B. Osc. " (L-5)	
S-5084	" - S.W. Ant. " (L-3, L-4)	
S-5080	" - S.W. R.F. " (L-9)	
S-5082	" - S.W. Osc. " (L-6)	
S-5091	Condenser - Variable condenser (C-4,C-10,C-15, C-8, C-16)	
	Resistor, 100 ohms + - 20% ½ watt (R-2,R-13)	
	" 390 " + - 10% ½ " (R31)	
	" 1500 " + - " " " (R-25,R-26)	
	" 2200 " + - 20% ½ " (R-4)	
	" 3000 " + - 10% 5 watts (R35)	
	" 6800 " + - 10% ½ watt (R30)	
	" 6800 " + - 20% " (R34)	
	" 22000 " + - 10% " (R6)	
	" 22000 " + - 20% " (R15)	
	" 33000 " + - 10% " (R-11, R-12, R-24)	

Stock No.	Description	List Price
	CHASSIS ASSEMBLY (CONT'D)	
	Resistor 39000 ohms + - 10% ½ watt (R27)	
	" 68000 " + - 10% " (R-8)	
	" 220,000 " + - 10% " (R-18, R-20)	
	" 220,000 " + - 20% ½ " (R10)	
	" 470,000 " + - 10% " (R-28, R-33)	
	" 470,000 " + - 20% ½ " (R-9, R-17, R-32)	
	" 1.0 Meg." + - 20% ½ watt (R-1, R-3, R-7, R-21)	
	" 3.3 " " + - 20% ½ " (R-16)	
	" 10.0 " " + - 20% " (R-19, R-29)	
S-5344	Socket - Dual phono input socket	
S-5087	Switch - Range switch (S1 - S2 - S3)	
S-5089	Tone Control (S4-R22) (1 Meg.)	
S-5085	Transformer - 1st I.F. trans. (L-10,L-11, C-19,C-20)	
S-5086	" - 2nd I.F. trans. (L-12,L-13, C-26,C-27)	
S-5090	" - Output trans.(T-1, L-14, L-15	
S-4381	" - Power trans. 25 cycles (T2)	
S-4379	" - " " 60 " (T2)	
S-5088	Volume Control (R23) (1 Meg.)	
	SPEAKER ASSEMBLY	
S-4298	Board - Speaker terminal board	
S-4299	Cone - cone & voice coil assembly (L-16)	
	MISCELLANEOUS ASSEMBLIES	
S-4313	Cord - Dial cord	
74209	Cover - Mounting screw cover (threaded type) (Pkg. 3)	
S-5346	Cloth - Grille Cloth (29¾ x 12¾)	
S-5077	Dial - Dial scale	
S-5348	Decalcommania - (Inside on Door) (Range)	
73549	Emblem - "RCA Victor" emblem	
S-5347	Handle - Antique Door Pull	
S-3870	Knobs	
74210	Knob - reject control knob	
S-5075	Knobs	
S-5076	Loop - antenna loop assy.	
S-5095	Pointer - station selector pointer	
74424	Screw - No. 8-32 x 1⅜" special screw (with tapped hole) for mounting record changer - use with 74209 Cover (Pkg. 3)	
74422	Spring - Conical spring for mounting record changer - upper. L.H. side (2 reg.) (Pkg. 2)	
74423	Spring - Conical spring for mounting record changer-bottom (3 req.) (Pkg. 3)	
74421	Spring - Conical spring for mounting record changer - upper - R.H. side (1 Req.) (Pkg. 2)	
S-5345	Track - Runner L.H. - Runner R.H. - Stop	

Only Items listed under stock numbers are available as Replacement Parts.
All Parts and Prices subject to change or withdrawal without notice.



Model 9W93

RCA VICTOR

"HIS MASTER'S VOICE"

RADIO-PHONOGRAPH COMBINATION

MODEL 9W93

SERVICE DATA

—1949 No. 26—

GENERAL SERVICE DIVISION
RCA VICTOR COMPANY LIMITED
MONTREAL, QUE.

Electrical and Mechanical Specifications

TUNING RANGE

Standard Broadcast	540-1600 KC
Short Wave	5.8-18.2 MC
Intermediate Frequency	455 KC

TUBE COMPLEMENT

(1)	Type 6BA6	R.F. Amplifier
(2)	Type 6BE6	Converter
(3)	Type 6BA6	I.F. Amplifier
(4)	Type 6AV6	Audio
(5)	Type 6AV6	Det. A.V.C. Phase Inverter
(6)	Type 6C4	Driver
(7)	Type 6V6GT	Output
(8)	Type 6V6GT	Output
(9)	Type 5Y3GT	Rectifier

Dial Lamps (2)	Mazda 51
Pilot Lamp	Mazda 51
Tuning Drive Ratio	19.1 (9½ turns of knob)

POWER SUPPLY RATING

Rating A—105-125 Volts, 60 cycles, .75 amps.____86 watts
Rating B—105-125 Volts, 25 cycles, .75 amps.____86 watts

LOUDSPEAKER

Size and Type	12 in. P.M.
Voice coil impedance	2.2 ohms at 400 cycles

POWER OUTPUT

Undistorted	7 watts
Maximum	10 watts

RECORD CHANGER (RP-168)

Turnable Speed	45 r.p.m.
Record capacity	Eight 7 in. records
Pickup	Crystal (Medium output)

RECORD CHANGER (RP178)

Turntable speed	78 r.p.m.
Record capacity	Ten 12 in. or twelve 10 in.
Pickup	1.4 Volts at 1000 cycles across 500,000 ohm load.

CABINET DIMENSIONS

Height	34 in.
Width	32 in.
Depth	17¼ in.

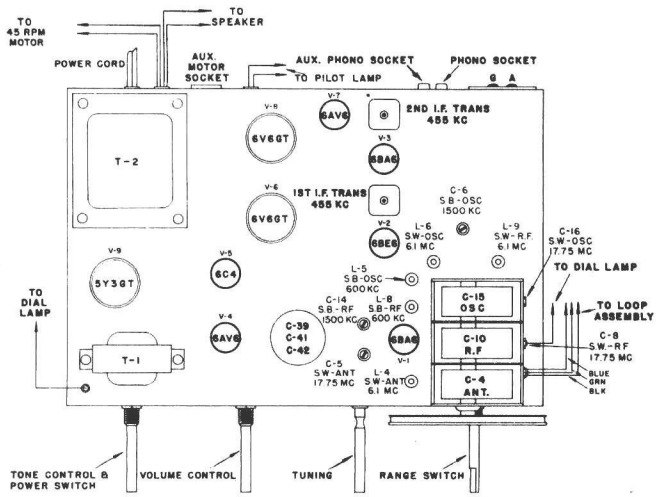

Fig. 1—Chassis Layout and Alignment Adjustments

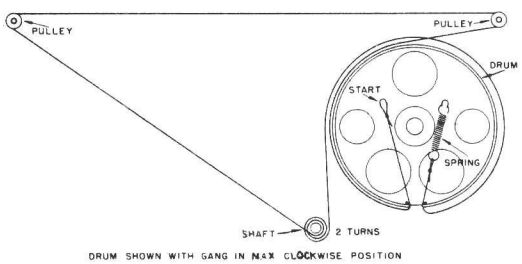

Fig. 2—Dial Cord Stringing.

For further information on Model 9W93 Receiver, RP168 and RP178 Record Changers, see the 9W91, RP168 and RP178 service notes.

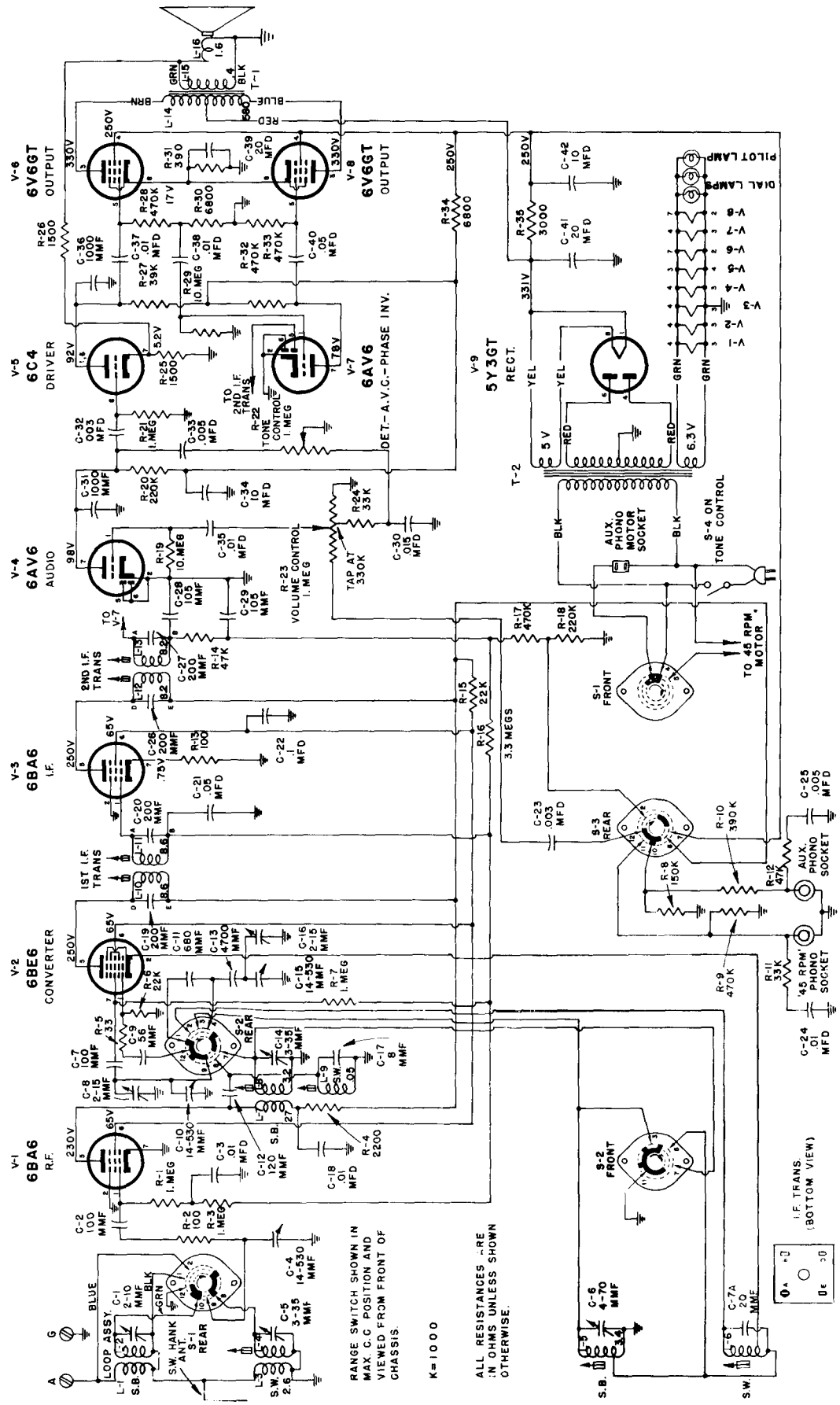

Fig. 3—Schematic Diagram



Model 9W95

RCA VICTOR

RADIO-PHONOGRAPH COMBINATION

MODEL 9W95

SERVICE DATA

—1950 NO. 3—

GENERAL SERVICE DIVISION
RCA VICTOR COMPANY LIMITED
MONTREAL, QUE.

Electrical and Mechanical Specifications

TUNING RANGE

Standard Broadcast	540-1600 KC
Short Wave	5.8-18.2 MC
Intermediate Frequency	455 KC

TUBE COMPLEMENT

(1)	Type 6BA6	R.F. Amplifier
(2)	Type 6BE6	Converter
(3)	Type 6BA6	I.F. Amplifier
(4)	Type 6AV6	Audio
(5)	Type 6AV6	Det. A.V.C. Phase Inverter
(6)	Type 6C4	Driver
(7)	Type 6V6GT	Output
(8)	Type 6V6GT	Output
(9)	Type 5Y3GT	Rectifier

Dial Lamps (2)	Mazda 51
Pilot Lamp	Mazda 51
Tuning Drive Ratio	19:1 (9½ turns of knob)

POWER SUPPLY RATING

Rating A—105-125 Volts, 60 cycles, .75 amps.	86 watts
Rating B—105-125 Volts, 25 cycles, .75 amps.	86 watts

LOUDSPEAKER

Size and type	12 in. P.M.
Voice coil impedance	2.2 ohms at 400 cycles

POWER OUTPUT

Undistorted	7 watts
Maximum	10 watts

PHONOGRAPH (RP168A-1)

Turntable speed	45 r.p.m.
Record capacity	Eight 7 in.—long playing
Pickup	Crystal (Medium output)

PHONOGRAPH (RP200)

Record capacity	Ten twelve inch or twelve ten inch
Turntable speed	33-1/3 or 78 R.P.M.
Pickup	Crystal (Medium output)

CABINET DIMENSIONS

Height	34 in.
Width	32 in.
Depth	16 in.

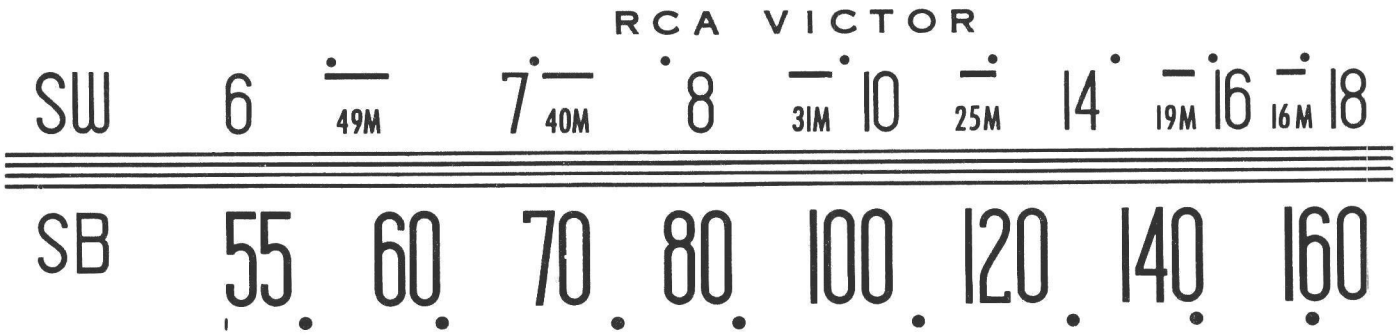

The Dial Scale drawing shown is a full size reproduction. It can be used as a reference in alignment procedure.

Fig. 1—Dial Scale

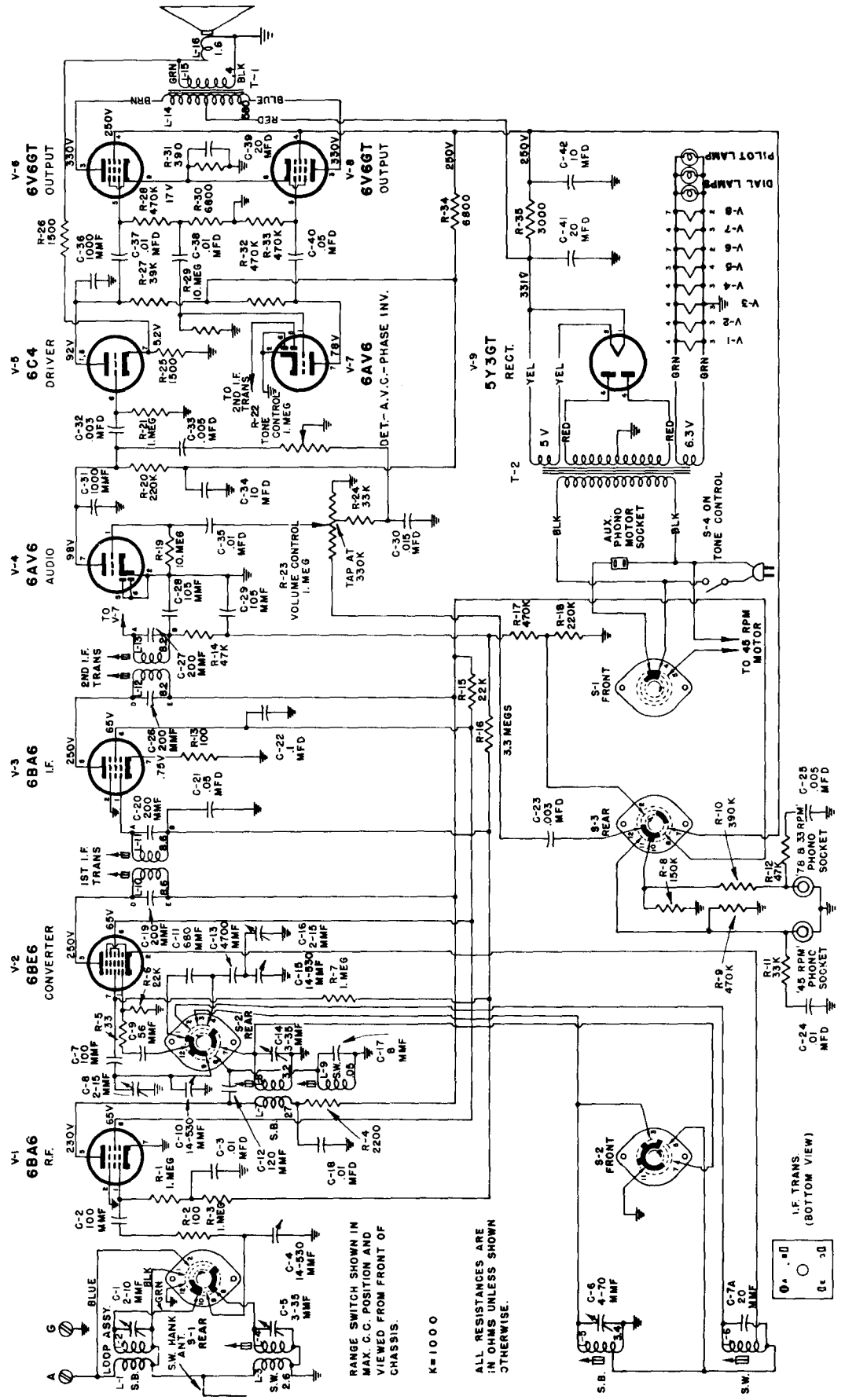

Fig. 2—Schematic Diagram

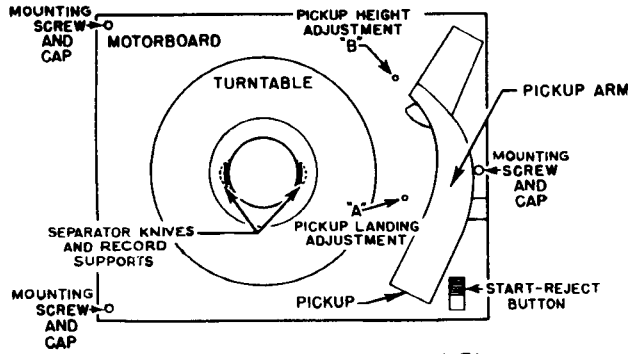

Fig. 3—Top View RP168A1 Record Changer

Pickup Landing Adjustment "A"

The pickup point should land half-way between the outer edge of the record and the first music groove.

If the pickup lands inside the starting grooves—turn screw "A" slightly clockwise. If pickup lands outside the starting grooves—turn screw "A" slightly counterclockwise.

Pickup Height Adjustment "B"

During cycle the pickup arm must rise high enough to clear a stack of eight records on the turntable, but not high enough to cause the top of the arm to touch records resting on the record supports.

If pickup does not clear a stack of eight records—turn screw "B" slightly clockwise. If pickup arm touches records on record supports—turn screw "B" slightly counterclockwise.

Record Separators

In the out of cycle position the record separator knives or discs are normally concealed inside the center post. During service, the position of the star wheel on the underside of the record changer may be accidentally shifted; this may cause the separator knives to be extended when they should be concealed.

If the separator knives are thus extended—turn the power on so that the turntable is revolving, gently press fingers against the extended knives until they disappear inside the center post — DO THIS ONLY WHILE MECHANISM IS OUT OF CYCLE.

Care of Sapphire

The record changer sapphire is protected by a permanent metal guard. LINT MAY COLLECT TO CLOG THE OPENING IN THE GUARD AT THE SAPPHIRE POINT AND CAUSE POOR RECORD REPRODUCTION. This may require occasional cleaning of the guard opening—clean by carefully brushing with a small soft brush.

CRITICAL LEAD DRESS

1—Dress green loop lead away from chassis.
2—Dress black and blue loop leads away from green lead.
3—Keep C-13 leads as short as possible, and dress away from chassis.
4—Dress blue lead, from R.F. section of the gang (C-10) to S-2 pin #9, to chassis.

ALIGNMENT PROCEDURE

Before aligning the receiver, set the gang condenser for maximum capacity and then set the dial cursor on the calibration point at the extreme left hand end of the dial.

When only a portion of the circuit is to be aligned select the required portion and perform all the remaining steps.

In order to obtain best results, it is advisable to align the 455 KC I.F.'s with the help of a cathode ray oscilloscope. The scope should be connected across the volume control. If this equipment is not available, use the method outlined below in the alignment chart.

ALIGNMENT CHART

Order of Alignment		TEST OSCILLATOR				RECEIVER				
		Connect "Hi" Side To	Connect "Lo" Side To	Dummy Antenna	Frequency Setting	Range Selector	Receiver Dial Setting	Circuit To Adjust	Adjustment Symbols	Notes
I.F. Alignment	1	V-3, 6BA6 Pin #1	GND	.1MFD	455KC	S.B.	"LO" End	2nd I.F. Trans.	L-12, L-13	Max. Out.
	2	V-2, 6BE6 Pin #7	Same	Same	Same	Same	Same	1st I.F. Trans.	L-10, L-11	Same
	3	Repeat steps 1 and 2.								
S.W. Alignment	4	"Ant" Terminal	GND	300 OHMS	6.1 MC	S.W.	Same	S.W. Osc.	L-6	Same
	5	Same	Same	Same	Same	Same	6.1 MC	S.W.-R.F.	L-9	Same
	6	Same	Same	Same	Same	Same	Same	S.W.-Ant.	L-4	Same
	7	Same	Same	Same	17.75 MC	Same	17.75 MC	S.W. Osc.	C-16	Same
	8	Same	Same	Same	Same	Same	Same	S.W.-RF	C-9	Same
	9	Same	Same	Same	Same	Same	Same	S.W.-Ant.	C-3 (Rock in)	Same
	10	Repeat steps 4 to 9.								
S.B. Alignment	11	"Ant" Terminal	GND	220 MMF	600 KC	S.B.	"LO" End	S.B.-Osc.	L-5	Same
	12	Same	Same	Same	Same	Same	600 KC	S.B.-R.F.	L-8	Same
	13	Same	Same	Same	1599 KC	Same	1500 KC	S.B.-Osc.	C-6	Same
	14	Same	Same	Same	Same	Same	Same	S.B.-R.F.	C-14	Same
	15	Same	Same	Same	Same	Same	Same	S.B.-Ant.	C-1 *	Same
	16	Repeat Steps 11 to 15								

* It is advisable to Align C-1 when the loop antenna & receiver are both in the cabinet.

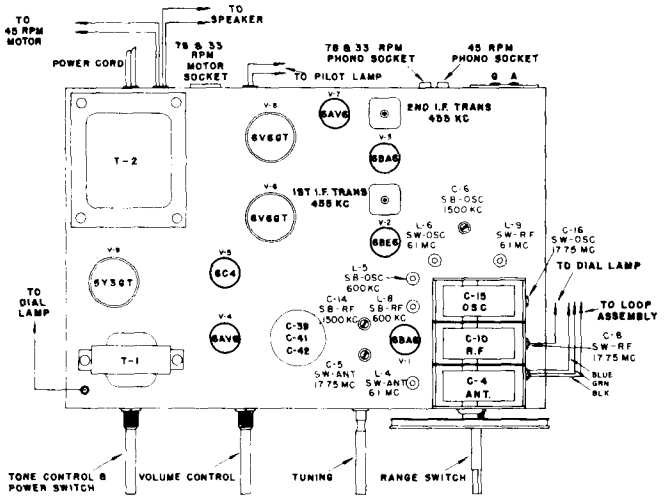

Fig. 4—Chassis Layout and Alignment Adjustments.

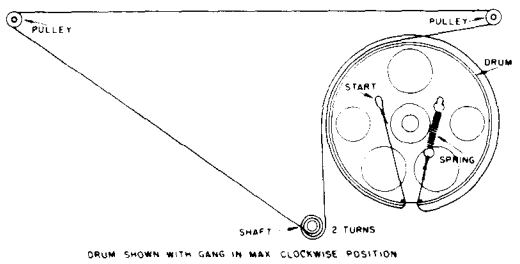

Fig. 5—Dial Cord Stringing.

REPLACEMENT PARTS FOR MODEL 9W95

Insist on Genuine Factory Tested Parts, which are readily identified and may be purchased from Authorized Dealers.

Stock No.	Description	List Price
	CHASSIS ASSEMBLY	
S-5093	Capacitor - Trimmer (C-5) (C-14)	
S-5094	" - " (C-6)	
70597	" - Ceramic 8 MMF., 500 V., + - 10% (C-17)	
31871	" - " 20 MMF., 500 V., + - 5% (C-7A)	
S-4523	" - 56 MMF., 500 V., + - 10% and 33 ohm ½ watt (C-9)(R-5)	
73152	" - Ceramic 100 MMF., 500 V., + - 20% (C-2,C-7)	
S-4614	" - 2 (105) MMF., 500 V. and 4700 ohms ½ watt (C-28, C-29, R14)	
71614	" - Ceramic 120 MMF., 500 V., + - 10% (C-12)	
14498	" - Mica 620 MMF., 300 V., + - 5% (C11)	
S-5370	" - (Ceramic 1,000 MMF., 350 V., + -20% (C-31, C-36)	
39668	" - Mica 4700 MMF., + - 5% 500 V., (C-13)	
	" - Paper .003 Mfd.,+ -20% 200 V.,(C-23)	
	" - " .003 Mfd.,+ -20% 400 V.,(C-32)	
	" - " .005 Mfd.,+ -20% 400 V.,(C-33)	
	" - " .01 Mfd.,+ -20% 200 V., (C24, C25)	
	" - " .01 Mfd.,+ -10% 200 V.,(C-35)	
	" - " .01 Mfd.,+ -20% 400 V.,(C-3 C-37)	
	" - " .015 Mfd.,+ -20% 200 V.,(C-30)	
	" - " .05 Mfd.,+ -20% 200 V.,(C-21)	
	" - " .05 Mfd.,+ -20% 400 V.,(C-40)	
	" - " .1 Mfd.,+ -20% 400 V.,(C-22)	
S-5092	" - Electrolytic 10 Mfd., 400 V. (C-34) 10 Mfd., 400 V. (C-42) 20 Mfd., 400 V. (C-41) 20 Mfd., 25 V. (C-29)	
S-5081	Coil - S.B. R.F. Coil (L-7, L-8)	
S-5083	" - S.B. Osc. " (L-5)	
S-5084	" - S.W. Ant. " (L-3, L-4)	
S-5080	" - S.W. R.F. " (L-9)	
S-5082	" - S.W. Osc. " (L-6)	
S-5091	Condenser - Variable condenser (C-4,C-10,C-15, C-8, C-16)	
	Resistor, 100 ohms + - 20% ½ watt (R-2,R-13)	
	" 390 " + - 10% ½ " (R31)	
	" 1500 " + - " " " (R-25,R-26)	
	" 2200 " + - 20% ½ " (R-4)	
	" 3000 " + - 10% 5 watts (R35)	
	" 6800 " + - 10% ½ watt (R30)	
	" 6800 " + - 20% " (R34)	
	" 22000 " + - 10% " (R6)	
	" 22000 " + - 20% " (R15)	
	" 33000 " + - 10% " (R-11, R-12, R-24)	

Stock No.	Description	List Price
	CHASSIS ASSEMBLY (CONT'D)	
	Resistor 39000 ohms + - 10% ½ watt (R27)	
	" 68000 " + - 10% " (R-8)	
	" 220,000 " + - 10% " (R-18, R-20)	
	" 220,000 " + - 20% ½ " (R10)	
	" 470,000 " + - 10% " (R-28, R-33)	
	" 470,000 " + - 20% ½ " (R-9, R-17, R-32)	
	" 1.0 Meg. " + - 20% ½ watt (R-1, R-3, R-7, R-21)	
	" 3.3 " " + - 20% ½ " (R-16)	
	" 10.0 " " + - 20% " (R-19, R-29)	
S-5344	Socket - Dual phono input socket	
S-5087	Switch - Range switch (S1 - S2 - S3)	
S-5089	Tone Control (S4-R22) (1 Meg.)	
S-5085	Transformer - 1st I.F. trans. (L-10,L-11, C-19,C-20)	
S-5086	" - 2nd I.F. trans. (L-12,L-13, C-26,C-27)	
S-5090	" - Output trans.(T-1, L-14, L-15	
S-4381	" - Power trans. 25 cycles (T2)	
S-4379	" - " " 60 " (T2)	
S-5088	Volume Control (R23) (1 Meg.)	
	SPEAKER ASSEMBLY	
S-4298	Board - Speaker terminal board	
S-4299	Cone - cone & voice coil assembly (L-16)	
	MISCELLANEOUS ASSEMBLIES	
S-4313	Cord - Dial cord	
74209	Cover - Mounting screw cover (threaded type) (Pkg. 3)	
S-5346	Cloth - Grille Cloth (29¾ x 12¾)	
S-5077	Dial - Dial scale	
S-5348	Decalcommania - (Inside on Door) (Range)	
73549	Emblem - "RCA Victor" emblem	
S-5347	Handle - Antique Door Pull	
S-3870	Knobs	
74210	Knob - reject control knob	
S-5075	Knobs	
S-5076	Loop - antenna loop assy.	
S-5095	Pointer - station selector pointer	
74424	Screw - No. 8-32 x 1¾" special screw (with tapped hole) for mounting record changer - use with 74209 Cover (Pkg. 3)	
74422	Spring - Conical spring for mounting record changer - upper, L.H. side (2 req.) (Pkg. 2)	
74423	Spring - Conical spring for mounting record changer-bottom (3 req.) (Pkg. 3)	
74421	Spring - Conical spring for mounting record changer - upper - R.H. side (1 Req.) (Pkg. 2)	
S-5345	Track - Runner L.H. - Runner R.H. - Stop	

Only items listed under stock numbers are available as Replacement Parts.
All parts and prices subject to change or withdrawal without notice.

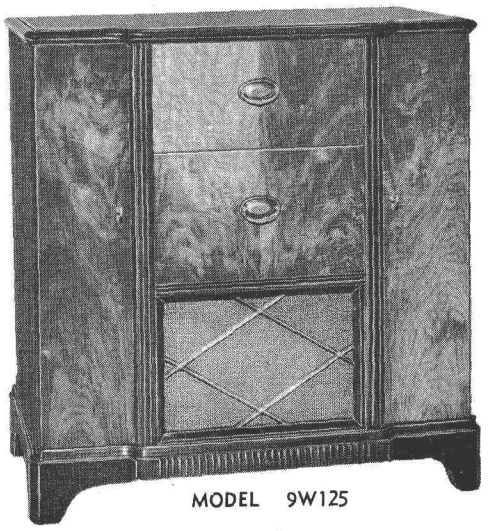

MODEL 9W125

RCA VICTOR

"HIS MASTER'S VOICE"

RADIO & DUAL PHONOGRAPH COMBINATION

MODEL 9W125

SERVICE DATA

— 1949 No. 25 —

GENERAL SERVICE DIVISION
RCA VICTOR COMPANY LIMITED
MONTREAL, QUE.

Electrical and Mechanical Specifications

Frequency Ranges:

Standard Broadcast	540-1600	KC.
Short Wave "SW_1"	5.8-10	MC.
Short Wave "SW_2"	11.4-18.2	MC
Frequency Modulation "FM"	88-108	MC

I.F. Frequencies

Amplitude Modulation	455	KC
Frequency Modulation	10.7	MC

Tube Complement

(1)	RCA	6BA6	R.F. Amplifier
(2)	RCA	6BE6	A.M. Converter
(3)	RCA	6J6	F.M. Converter
(4)	RCA	6BA6	A.M.—F.M. IF Amplifier
(5)	RCA	6AU6	F.M. IF Amplifier
(6)	RCA	6AL5	Ratio Detector
(7)	RCA	6AV6	Audio
(8)	RCA	6AV	Det.—A.V.C Phase Inverter
(9)	RCA	6C4	Driver
(10)	RCA	6V6GT	Output
(11)	RCA	6V6GT	Output
(12)	RCA	5Y3GT	Rectifier

DIAL LAMPS	(2) Mazda 51
PILOT LAMP	(1) Mazda 51
TUNING DRIVE RATIO	(19:1) or 9½ turns of knob.

POWER OUTPUT

Undistorted	8	Watts
Maximum	12	watts

Loudspeaker

Type	12" P.M.
Voice Coil Impedance	2.2 ohms at 400 cycles

Power Supply Ratings:

Rating A-105-125 volts, 60 cycles, 1.0 amp.	115	watts
Rating B-105-125 volts, 25 cycles, 1.0 amp.	115	watts

Cabinet Dimensions:

Height	35-13/16	inches
Width	34-3/4	"
Depth	17-1/4	"

Phonograph (45 RPM)

Type	RP-168A
Record Capacity	Eight 7 inch
Turntable speed	45 R.P.M.
Pickup	Crystal (Medium Output)

Phonograph (78 RPM)

Type	RP-178
Record capacity	Twelve 10 inch or Ten 12 inch
Turntable Speed	78 R.P.M.
Pickup	Crystal (Standard Output)

General Description

The RCA Victor Model 9W125 receiver is a twelve tube, four bands, long and short wave AM-FM radio phonograph combination.

The receiver tunes the standard broadcast band (540-1600 KC); the short wave bands (16 M to 49 M) (in two ranges) and the F.M. band (88-108 MC). The receiver incorporates an R.F. amplifier on the AM, long and short wave bands, and a combined oscillator and mixer for the F.M. band. The A.M. section has one stage of I.F. amplification which gives good sensitivity and adequate gain for the audio stages. The F.M. section has two stages of I.F. amplification, the second being the driver for the Ratio Detector. The audio amplifier in this receiver is of the high quality type incorporating a "High" and "Low Frequency" tone control and delivers an undistorted output of eight watts.

The receiver also incorporates the latest RCA Victor 45 R.P.M. (RP-168A) record changer, and the standard RP178 record changer, which may be selected by the range switch.

Antenna Connections

The Model 9W125 receiver has two internal antennas housed in the cabinet. A loop antenna for standard broadcast; and a folded dipole for F.M. and short wave reception.

Standard Broadcast:

The loop antenna is very sensitive and therefore should result in good signal pickup, but in some cases, where the noise level is high or reception is weak, it is recommended that an external antenna be used. To connect an external antenna, connect the 'lead in' from the external antenna to terminal No. 3 on the antenna terminal board.

If reception is not improved, that is, the noise level still persists, it is advisable to check and see if the noise is being picked up by the loop antenna; if it is, terminal No. 1 and 2 of the antenna terminal board must be shorted. This short circuits the loop antenna and detunes the input circuit. It is then necessary to re-adjust the antenna core (L-1) at 580 KC and the trimmer (C-5) at 1500 KC. No other adjustments should be made.

Short Wave Antenna:

The short wave antenna consists of the F.M. folded dipole antenna, with the input terminals 3 and 4 short circuited by S-3 on Range switch position SW_1 and SW_2. This makes the FM dipole antenna act as the internal short wave antenna. Should the location be such, that short wave reception be poor, an external antenna is recommended. This external antenna should be connected to terminal No. 3 of the antenna terminal board.

Frequency Modulation:

The antenna used on the F.M. band, is the F.M. folded dipole, which is located in the cabinet. Should, due to receiver position in the house or other obstruction such as high buildings or being located at a great distance away from the transmitting antenna, cause poor or weak F.M. reception, an external dipole antenna is recommended. The internal dipole should be disconnected from terminal 3 and 4 of the antenna terminal board, and the external dipole lead-in should be connected in its place.

NOTE:

If the receiver is connected to an external F.M. dipole antenna, it is not necessary to install any external short wave or broadcast band antenna. The reason being that the dipole and antenna lead in form a good antenna for the broadcast and short wave bands.

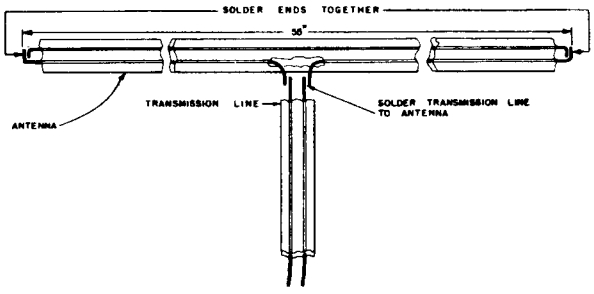

FIG. 1 F.M. FOLDED DIPOLE IN CABINET

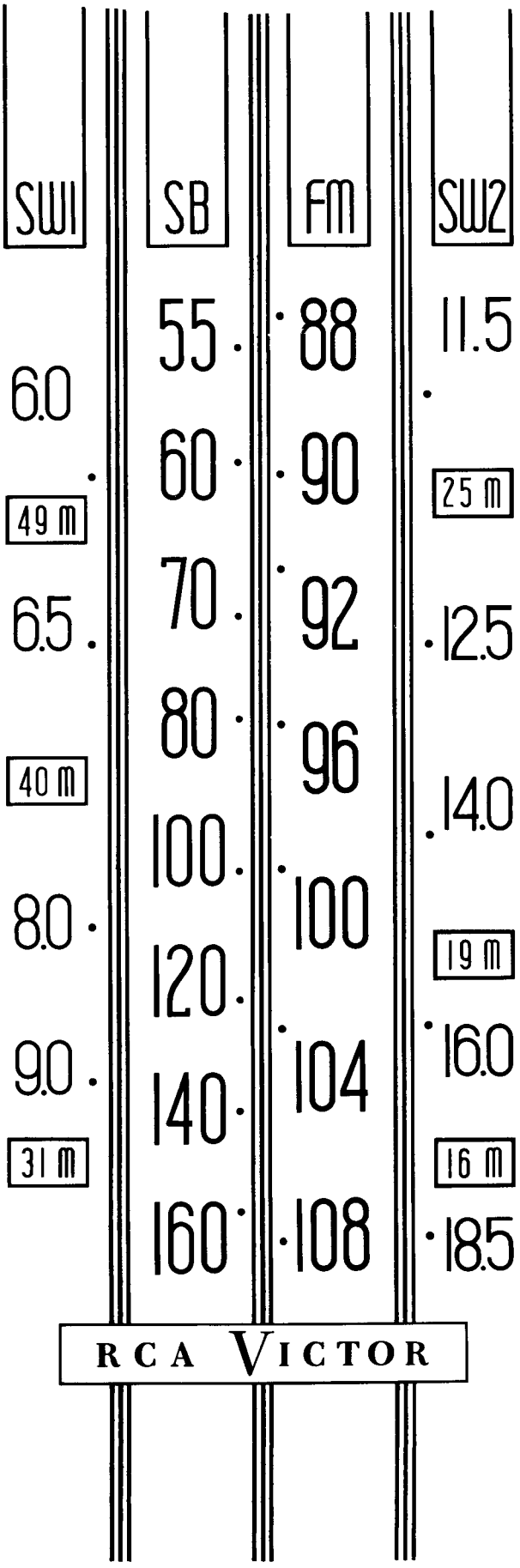

FIG. 2 DIAL SCALE DRAWING (FULL SCALE)

Critical Lead Dress

(1) Keep blue lead from ratio detector, pin "D" to 6AL5 Pin 5, as short as possible.

(2) Keep brown lead from 6AV6 and red from terminal board away from aforementioned blue lead.

(3) Keep B + lead, from pin 5 of S-4 (rear), away from FM antenna transmission line.

NOTE:

Make sure that the special "disc" type capacitors are always replaced by similar types. The reason being, that paper capacitors of the same value are not as efficient.

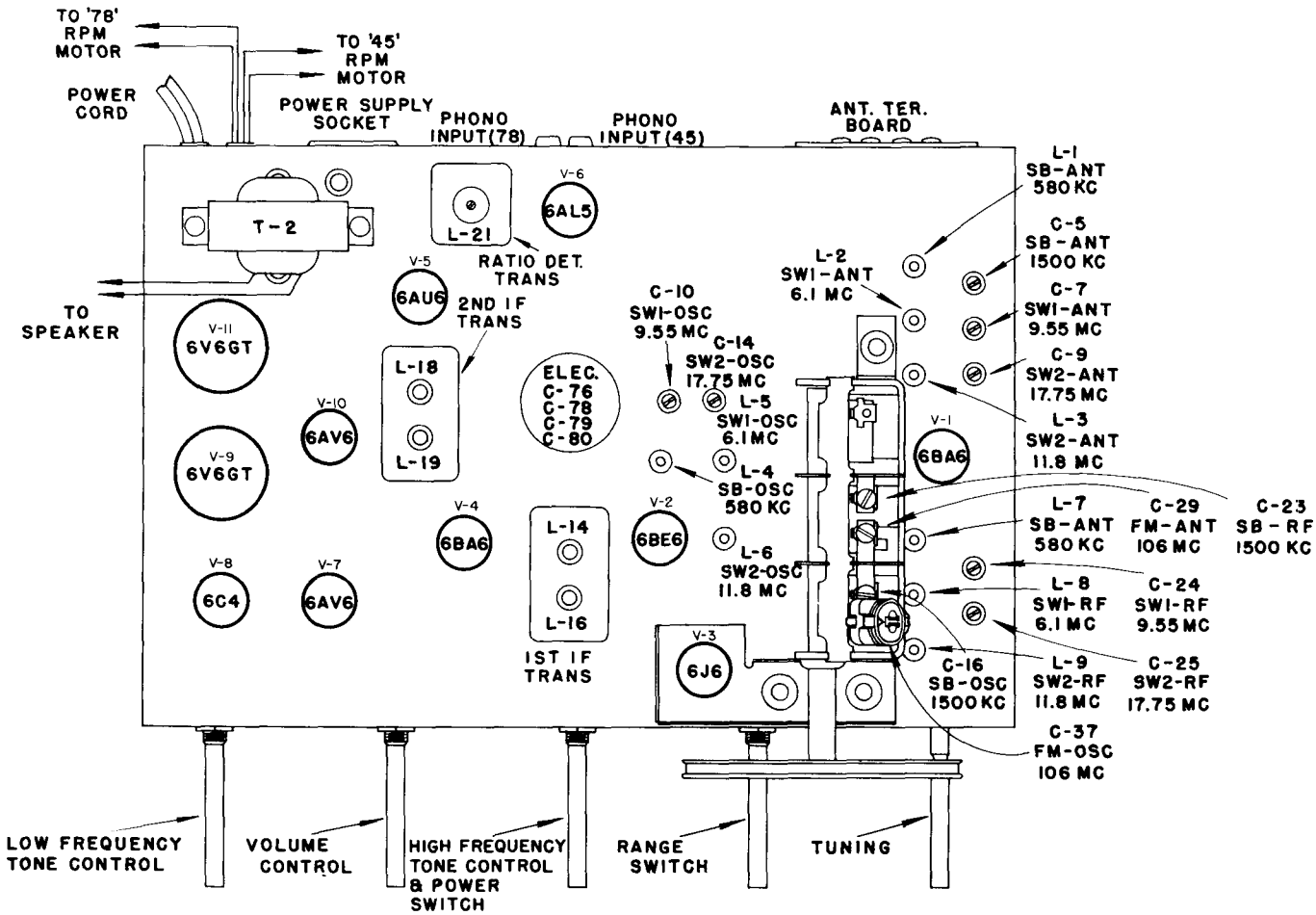

FIG. 3 CHASSIS LAYOUT & ALIGNMENT ADJUSTMENTS

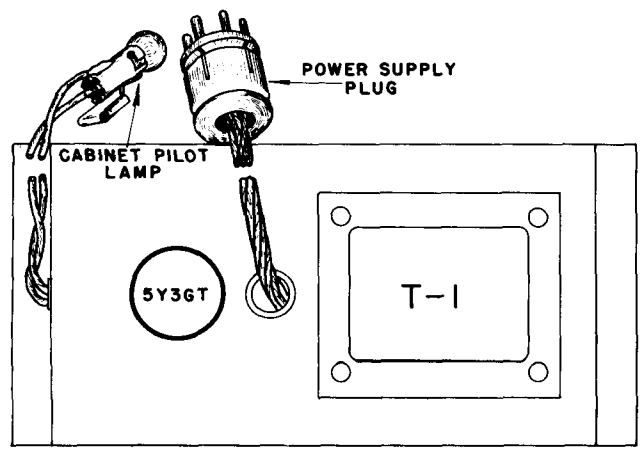

FIG. 4 POWER SUPPLY CHASSIS LAYOUT

Alignment Procedure

Before aligning the receiver follow procedure outlined below:

(1) Set pointer opposite 60 on the dial scale.

(2) Unhook the pointer from the dial cord, without disturbing its position.

(3) Set gang at maximum capacity, fully meshed.

(4) Move pointer one inch to the right.

(5) Hook up pointer to dial cord.

This gives the initial position of the pointer before alignment.

When only a portion of the circuit it to be aligned, select the required portion and perform all the remaining steps.

It is recommended that the I.F.'s be aligned with a cathode ray oscilloscope and sweep generator. If this equipment is not available, use the method outlined in the alignment chart..

ALIGNMENT CHART

ORDER OF ALIGNMENT		TEST OSCILLATOR				RECEIVER				
		CONNECT "HI" SIDE TO	CONNECT "LO" SIDE TO	DUMMY ANTENNA	FREQUENCY SETTING	RANGE SELECTOR	DIAL SETTING	CIRCUIT TO ADJUST	ADJUSTMENT SYMBOLS	NOTES
A.M.-I.F. ALIGNMENT	1	V-4 6BA6 Pin 1	Gnd	.1 mfd.	455 Kc	S.B.	"HI END"	2nd I.F. Trans.	L-19 L-20	Max. Out
	2	S-1 Rear Pin 1	Same	Same	Same	Same	Same	1st I.F. Trans.	L-15 L-16	Same
	3	Repeat Steps 1 & 2.								
S.B. ALIGNMENT	4	Ter. Board Ter. 1	Gnd	220 mmf	580 Kc	S.B.	580 Kc	Osc. R.F. Ant.	L-4 L-7 L-1	Max. Out
	5	Same	Same	Same	1500 Kc	Same	1500 Kc	Osc. R.F. Ant.	C-16 C-23 C-5	Same
	6	Repeat Steps 4 & 5.								
S.W.1 ALIGNMENT	7	Ter. Board Ter. 3	Gnd	300 Ohms	6.1 Mc	S.W.1	6.1 Mc	Osc. R.F. Ant.	L-5 L-8 L-2	Max. Out
	8	Same	Same	Same	9.55 Mc	Same	9.55 Mc	Osc. R.F. Ant.	C-10 C-24 C-7	Same
	9	Repeat Steps 7 & 8.								
S.W.2 ALIGNMENT	10	Ter. Board Ter. 3	Gnd	300 Ohms	11.8 Mc	S.W.2	11.8 Mc	Osc. R.F. Ant.	L-6 L-9 L-3	Max. Out
	11	Same	Same	Same	17.75 Mc	Same	17.75 Mc	Osc. R.F. Ant.	C-14 C-25 C-9	Same
	12	Repeat Steps 10 & 11.								
F.M.-RATIO DET. ALIGNMENT	13	Connect Voltohmyst probe to negative side of 2 mfd. electrolytic (C-60) Capacitor and low side to chassis.								
	14	V-5 6AU6 Pin 1	Gnd	.1 mfd.	10.7 Mc (Standard)	F.M.	"HI End"	Ratio Det. Trans.	L-21	Max. Out On Voltohmyst
	15	Same	Same	Same	Same	Same	Same	Same	L-22	Min. Out.*
	16	Repeat Steps 14 & 15								
F.M.-I.F. ALIGNMENT	17	V-4 6BA6 Pin 1	Gnd	.1 mfd.	10.7 Mc (Standard)	F.M.	"HI End"	2nd I.F. Trans.	L-17 L-18	Max. Out. on Voltohmyst
	18	Connect 1000 Ohm Resistor across 2nd I.F. Primary Ter. A. & H. Re-Adjust secondary L-18 at 10.7 Mc for maximum D.C. Voltage on Voltohmyst.								
	19	Remove 1000 Ohm Resistor and connect across 2nd I.F. Trans. Primary Ter. C.& E. Re-Adjust Primary L-17 at 10.7 Mc for maximum D.C. Voltage on Voltohmyst								
	20	Remove Resistor								
	21	Ter. Board Ter. 4	Gnd	.1 mfd.	10.7 Mc (Standard)	F.M.	"HI End"	1st I.F. Trans.	L-13 L-14	Max. Out. on Voltohmyst
	22	Connect 1000 Ohm Resistor across 1st I.F. Trans. Primary Ter. A. & C. Re-Adjust Secondary L-14 at 10.7 Mc for Maximum D.C. Voltage on Voltohmyst.								
	23	Remove 1000 Ohm Resistor and Connect across 1st I.F. Secondary Ter. D. & E. Re-Adjust Primary L-13 at 10.7 Mc for Maximum D.C. Voltage on Voltohmyst.								
F.M.-ANT. & OSC. ALIGNMENT	24	Ter. Board Ter. 4	Gnd	300 Ohms	106 Mc (Standard)	F.M.	106 Mc	Osc. Ant.	C-37 C-29 (Rock In)	Max. Out.
	25	Same	Same	Same	89 Mc (Standard)	Same	89 Mc	Osc. Ant.	Adj. Spacing L-11 " " L-10	Same
	26	Repeat Steps 24 & 25.								

* Two or more points may be found which lower the audio output; at the correct point the minimum audio output is approached rapidly and is much lower than at any incorrect point. Due to this fact it is advisable to first, determine the correct peak by feeding in a 10.7 Mc (F.M.) signal with a sweep of about 20 Kc., then align the bottom core for maximum output. Switch the generator to A.M. and retouch the core for minimum audio output. Always check the response of the ratio detector on the scope to obtain best results.

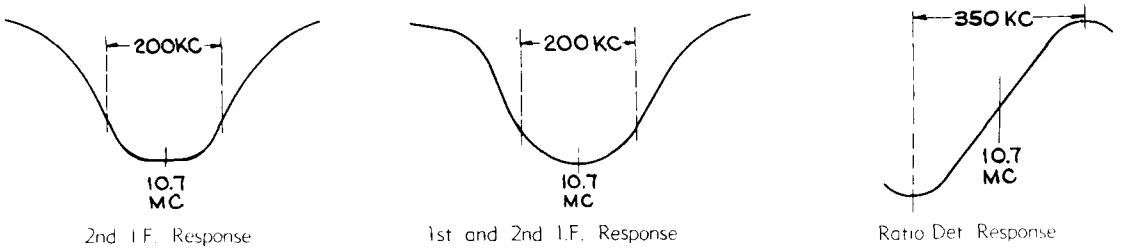

2nd I.F. Response — 1st and 2nd I.F. Response — Ratio Det. Response

Fig. 5—F.M. Response Curves

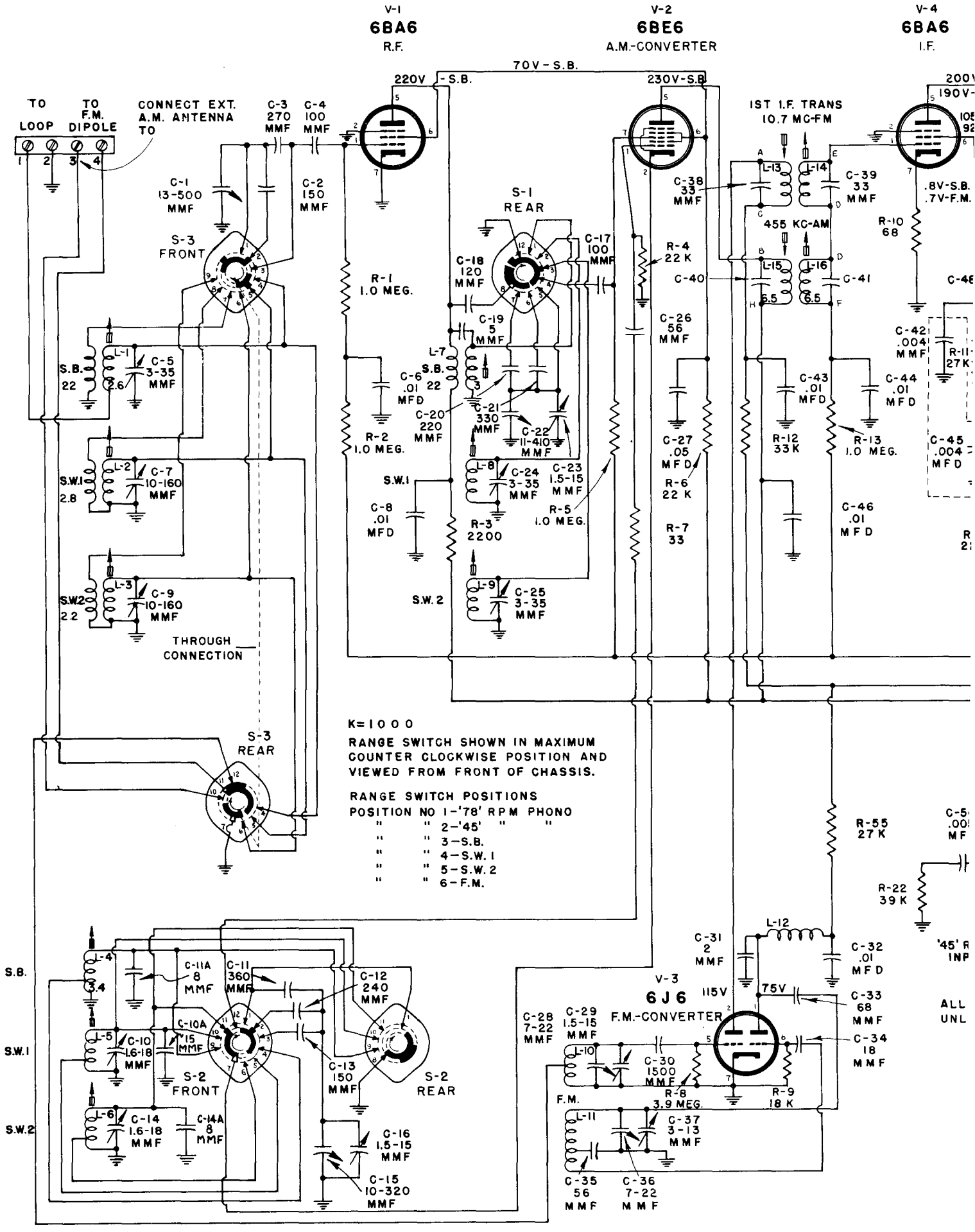
V-1
6BA6
R.F.
V-2
6BE6
A.M.-CONVERTER
V-4
6BA6
I.F.
70V - S.B.
220V - S.B.
230V-S.B.
TO LOOP
TO F.M. DIPOLE
CONNECT EXT. A.M. ANTENNA TO
C-1 13-500 MMF
C-2 150 MMF
C-3 270 MMF
C-4 100 MMF
S-3 FRONT
S-3 REAR
S.B. 22
S.W.1 2.8
S.W.2 2.2
L-1
L-2
L-3
C-5 3-35 MMF
C-7 10-160 MMF
C-9 10-160 MMF
THROUGH CONNECTION
R-1 1.0 MEG.
R-2 1.0 MEG.
C-6 .01 22 MFD
S-1 REAR
C-17 100 MMF
C-18 120 MMF
C-19 5 MMF
C-20 220 MMF
C-21 330 MMF
C-22 11-410 MMF
L-7
L-8
L-9
C-24 3-35 MMF
C-23 1.5-15 MMF
C-25 3-35 MMF
C-8 .01 MFD
R-3 2200
R-5 1.0 MEG.
S.W.1
S.W.2
C-38 33 MMF
R-4 22 K
C-40
C-26 56 MMF
C-27 .05 MFD
R-6 22 K
R-7 33
IST I.F. TRANS 10.7 MC-FM
L-13
L-14
L-15
L-16
C-39 33 MMF
C-41
455 KC-AM
6.5
C-43 .01 MFD
C-44 .01 MFD
R-12 33K
R-13 1.0 MEG.
C-46 .01 MFD
R-10 68
.8V-S.B.
.7V-F.M.
C-42 .004 MMF
R-11 27K
C-45 .004 MFD
K=1000
RANGE SWITCH SHOWN IN MAXIMUM COUNTER CLOCKWISE POSITION AND VIEWED FROM FRONT OF CHASSIS.
RANGE SWITCH POSITIONS
POSITION NO 1-'78' RPM PHONO
" " 2-'45' " "
" " 3-S.B.
" " 4-S.W. 1
" " 5-S.W. 2
" " 6-F.M.
R-55 27K
R-22 39K
'45' R INP
ALL UNL
S.B.
S.W.1
S.W.2
L-4
L-5
L-6
3.4
C-10 1.6-18 MMF
C-14 1.6-18 MMF
C-11A 8 MMF
C-10A 15 MMF
C-14A 8 MMF
C-11 360 MMF
S-2 FRONT
S-2 REAR
C-12 240 MMF
C-13 150 MMF
C-16 1.5-15 MMF
C-15 10-320 MMF
V-3
6J6
F.M.-CONVERTER
115V
75V
C-28 7-22 MMF
C-29 1.5-15 MMF
L-10
C-30 1500 MMF
R-8 3.9 MEG.
R-9 18 K
C-34 18 MMF
C-33 68 MMF
F.M.
L-11
C-37 3-13 MMF
C-35 56 MMF
C-36 7-22 MMF
L-12
C-31 2 MMF
C-32 .01 MFD

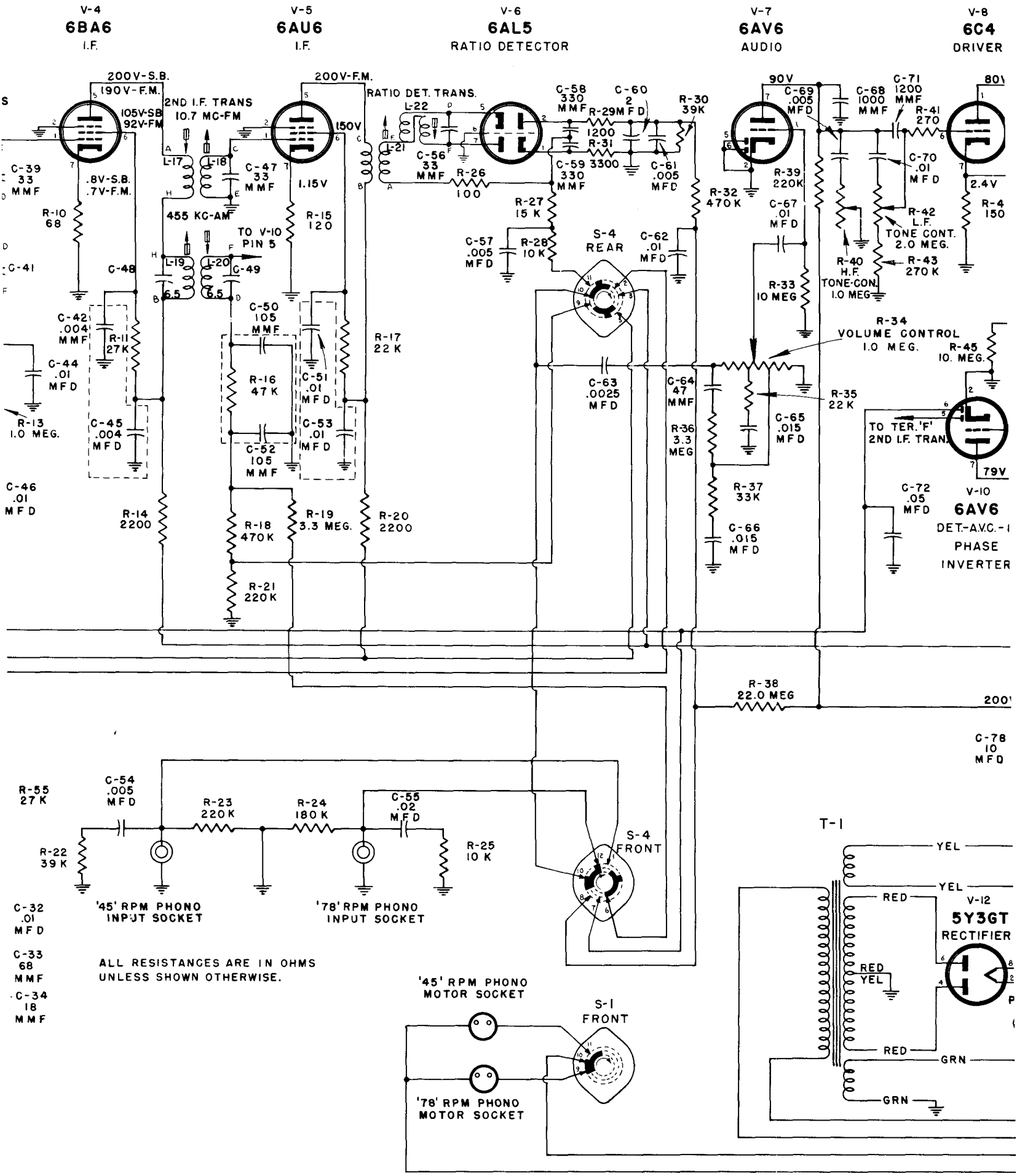

FIG. 6 SCHEMATIC DIAGRAM

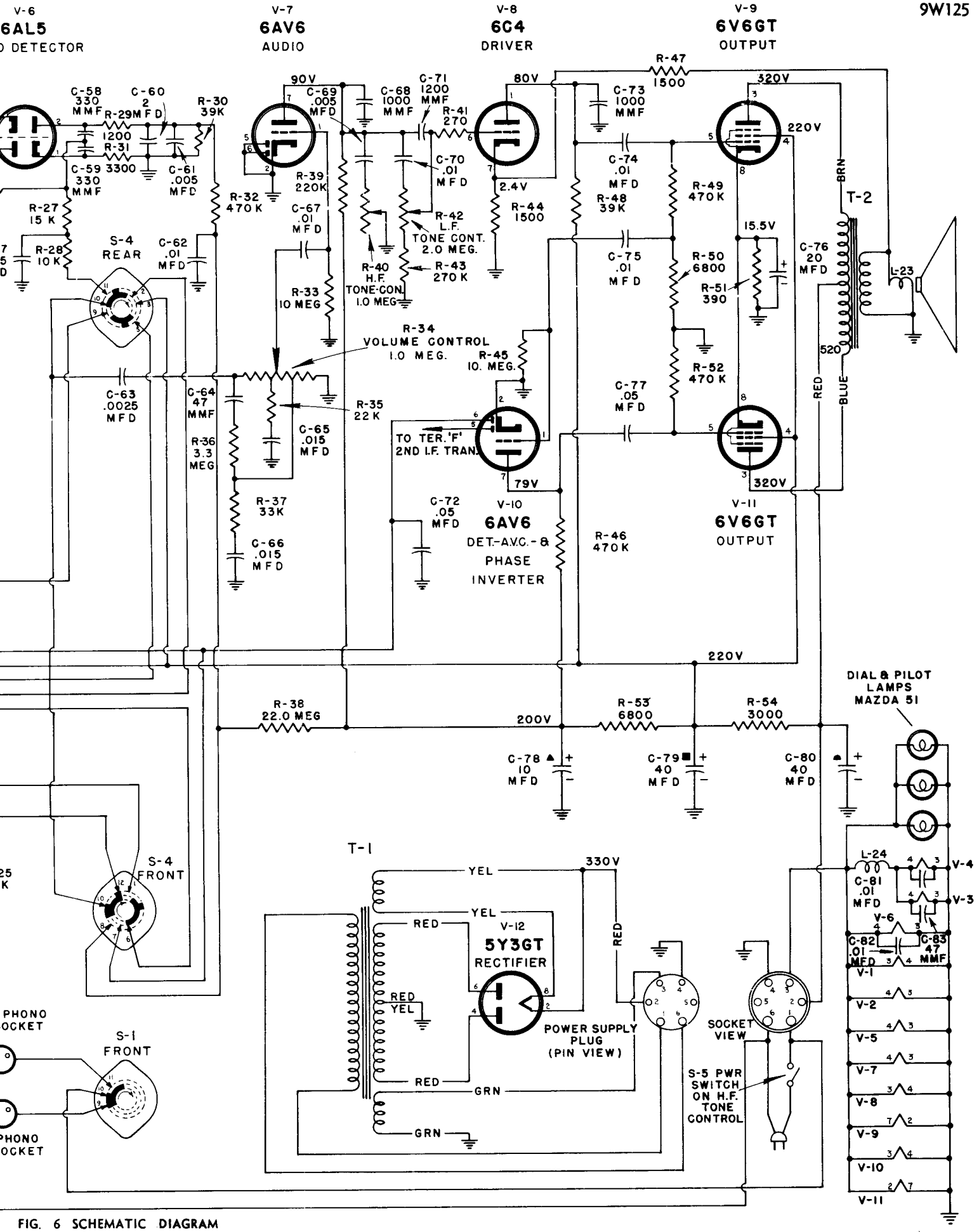

FIG. 6 SCHEMATIC DIAGRAM

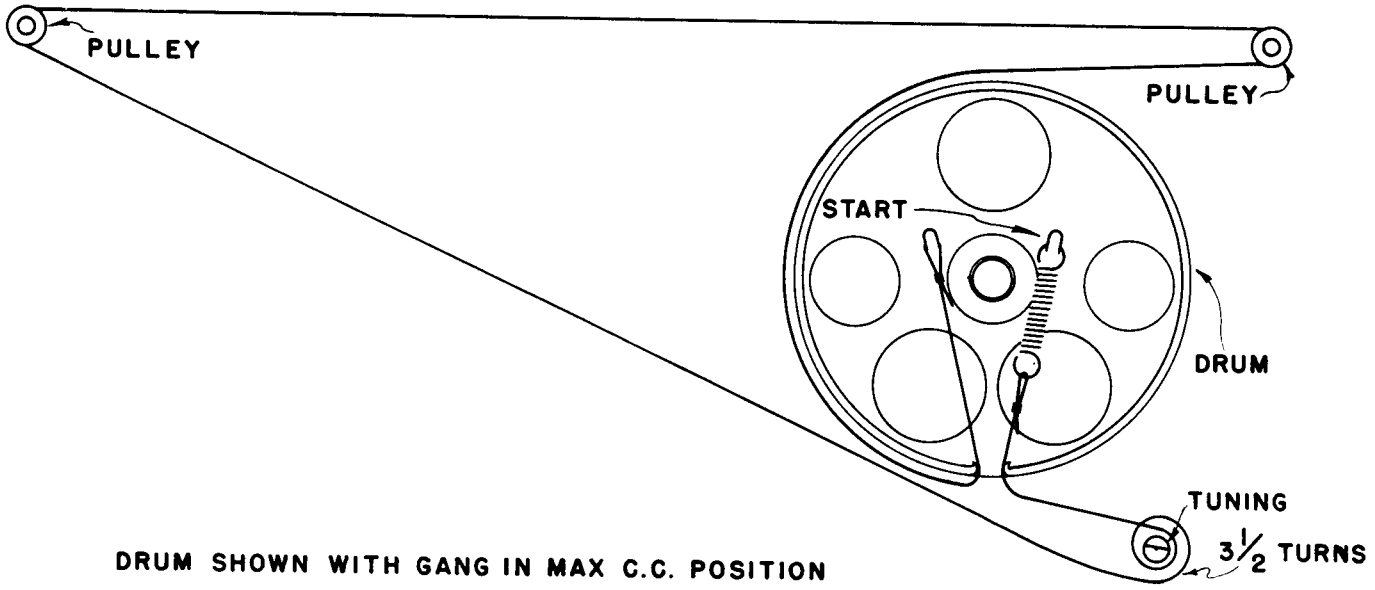

DRUM SHOWN WITH GANG IN MAX C.C. POSITION

FIG. 7 DIAL CORD STRINGING

Record Changers

Due to the fact that mechanical adjustments may change after a period of operation or as a result of severe jolting during shipment, we are including herein several adjustments which the serviceman is most likely to be called upon to perform.

Separator Synchronization:

1. Make certain the two embedded gears (5 and 6) are meshed with gear (7A) on the upper end of the star wheel shaft so the action of the separator knives is synchronized.

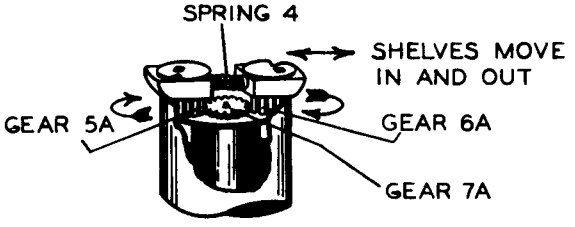

FIG. 8

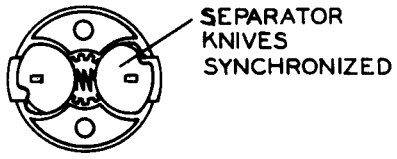

FIG. 9

Star Wheel Position:

1. Turn the star wheel so that the separator knives are in the position indicated in Figure 9. This may be determined by "feel" as the star wheel is turned.

2. Loosen the two set screws (61) sufficiently to permit the star wheel to rotate without disturbing the shaft(7).

3. Rotate the star wheel so that one tooth points directly to a cam screw as shown in Figure 10.

4. Tighten the two set screws (61) and rotate the mechanism through a complete cycle to check operation. The separator knives must rotate 360° to the starting position as indicated in Figure 9.

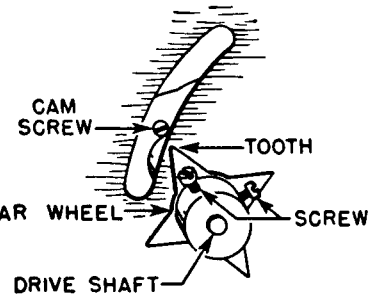

FIG. 10 STAR WHEEL TIMING

Director Lever Position:

Push reject lever and rotate the turntable slowly by hand until the end (41C) of the director lever moves in far enough, so when the star wheel is rotated it contacts by the amount indicated in Figure 11.

If the end of the director lever (main lever) is too close to the star wheel, it will jam. If too far away, it will cause erratic record dropping. If in doubt and unable to measure, move the end toward the star wheel until most of the play is removed when the star wheel is moved back and forth at this setting.

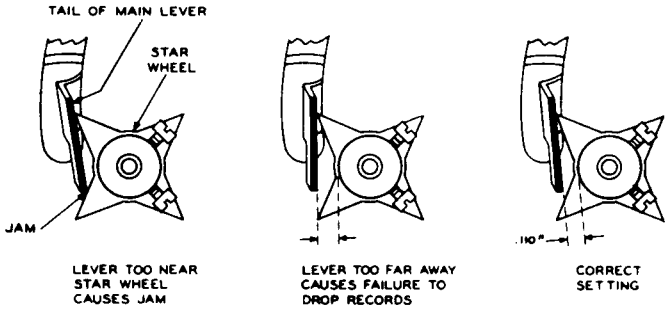

FIG. 11 SETTING OF DIRECTOR LEVER

Sapphire Height Adjustment (Out of Cycle):

Bend the lug on the pivot (40) so that the sapphire point is approximately 1/16" above the motorboard.

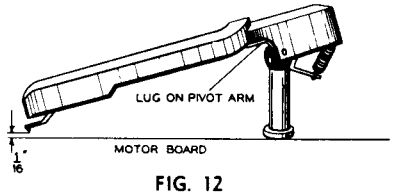

FIG. 12

Record Changers (cont'd)

Tripping Adjustment:

1. Assemble the pickup arm and trip lever assemblies as shown in Figure 13. Leave the clamping screw (57) loose enough to permit horizontal movement of the trip lever on the shaft. (Allow approximately .010 inch vertical end play.)
2. Turn the eccentric landing adjustment stud (45C) to determine the inward and outward limit of adjustment, then turn it to a setting half-way between the limits.

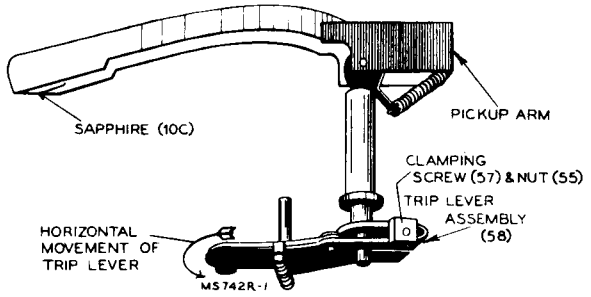

FIG. 13

3. Tripping should occur when the sapphire reaches a position 1 9/32" from the near side of the turntable spindle. This position is adjusted by holding the trip lever and moving the pickup arm inward or outward to obtain the specified position.
4. A convenient way of measuring this distance is to make a mark on the back side of a stroboscope disc 1 9/32" from the inner edge, place the disc on the turntable, with the turntable revolving, hold the disc stationary and move the pickup arm very slowly in towards the turntable spindle.
5. After this position has been obtained, tighten the clamping screw (57) and recheck the tripping position and vertical end play.

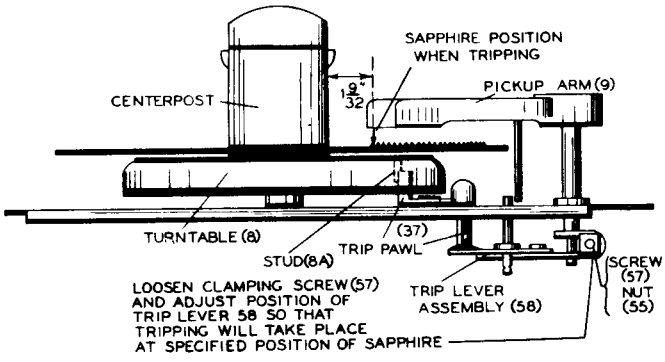

FIG. 14—TRIPPING POSITION

Landing Adjustment:

1. After the tripping adjustment has been made as described above, turn the eccentric landing adjustment stud (45C) so that the sapphire will set down on the record half-way between the outer edge and the first music groove. This position is 2⅝" from the turntable spindle. The location of the adjustment stud is illustrated in Figure 18.

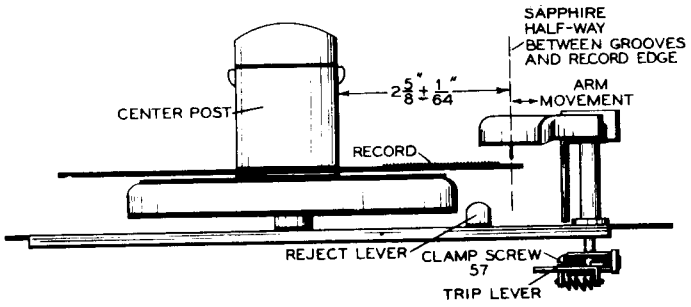

FIG. 15—LANDING POSITION

Pickup Arm Height Adjustment (In Cycle):

Set the mechanism in cycle. Turn the turntable by hand, until the pickup arm has reached its maximum height. By means of a screwdriver turn the height adjustment stud (45D) until the distance between the top of the turntable and the sapphire point is ¾". Use that position of the eccentric stud which causes the pickup arm to rise during clockwise adjustment of the stud. The location of the adjusting stud is illustrated in Figure 18.

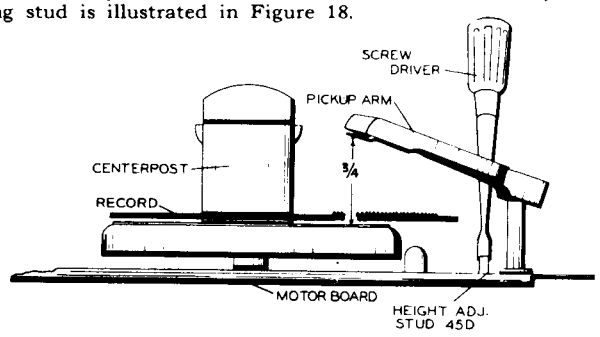

FIG. 16—HEIGHT ADJUSTMENT

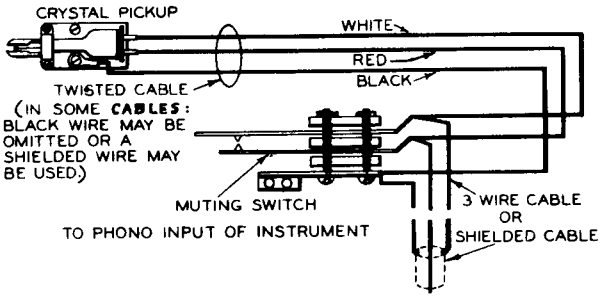

FIG. 17—PICKUP MUTING SWITCH WIRING

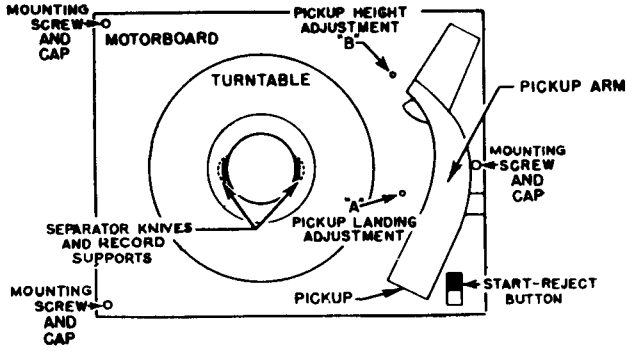

FIG. 18—TOP VIEW RP168A RECORD CHANGER

For Further Information on RP168A Record Changer Refer to RP168 Series Service Note.

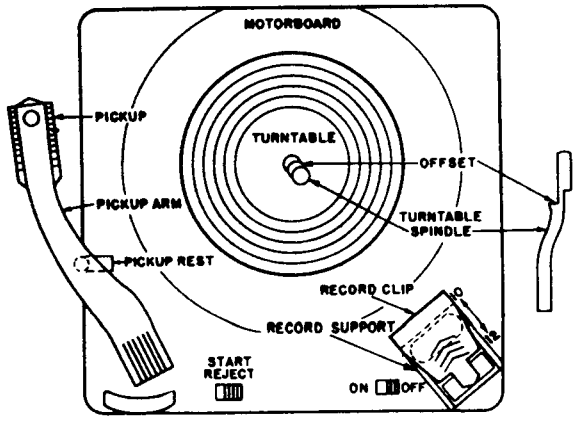

FIG. 19—TOP VIEW RP-178 RECORD CHANGER

For Further Information on RP-178 Record Changer Refer To RP178 SERVICE NOTE

REPLACEMENT PARTS FOR MODEL 9W125

Insist on genuine factory tested parts, which are readily identified and may be purchased from authorized dealers.

Stock No.	Description	List Price
	Chassis Assemblies	
S-4450	Capacitor - mica trimmer, 2 section 1.6 - 18 MMF (C-10, C-14)	
S-3611	" - Ceramic " 3-13 MMF. (C-37)	
S-5537	" - Mica trimmers, 2 sections 3-35 MMF. (C-24, C-25)	
S-5538	" - " " 3 sections 10-160 MMF. (C-5, C-7) 3-35 MMF. (C-9)	
73866	" - Ceramic, 2 MMF. 500 V. (C-31)	
S-5539	" - " 5 MMF. (C-19)	
S-5540	" - " 8 MMF. + - .5 MMF.(C-11A,C-14A)	
S-5541	" - " 15 MMF. + - 5% (C-10A)	
S-5542	" - " 18 MMF. 500 V. (C-34)	
S-5543	" - " 47 MMF. 500 V. (C-83)	
S-5544	" - Mica, 47 MMF. 10% (C-64)	
73867	" - Ceramic, 56 MMF. 500 V. (C-35)	
S-4523	Capristor - 56 MMF. 33 ohms (C-26, R-4)	
S-5545	Capacitor - Ceramic, 68 MMF. 500 V. (C-33)	
73152	" - " 100 MMF. + - 20% (C-4, C-17)	
S-4614	Capristor - 2 - 105 MMF. & 47,000 ohms (C-50,C-52-R-16)	
S-5546	Capacitor - Mica 120 MMF. + - 10% (C-18)	
S-5547	" - " 150 MMF. + - 5% (C-2, C-13)	
S-5548	" - " 220 MMF. + - 5% (C20)	
S-5549	" - " 240 MMF. + - 5% (C-12)	
S-5550	" - " 270 MMF. + - 5% (C-3)	
12952	" - " 330 MMF. + - 5% (C-21-C-58, C-59)	
S-5551	" - " 360 MMF. + - 5% (C-11)	
S-5370	" - Ceramic 1,000 MMF. +- 20% (C-68,C-73)	
S-5552	" - Mica, 1,200 MMF. +- 10% (C-71)	
71501	" - Ceramic, 1,500 MMF. 350 V. (C-30)	
---	" - Paper .0025 Mfd. +- 10% 200 B. (C-63)	
---	" - "Disc" .004 Mfd. 500 V. (C-42, C-45)	
---	" - Paper .005 Mfd. + - 10% (C-69)	
---	" - " .005 Mfd. + - 10% (C-57,C-54)	
---	" - " .005 Mfd. + - 10% 200 V. (C-61)	
---	" - "Disc" .01 Mfd. 500 V. (C-8, C-6, C-32 C-46, C-43, C-44, C-81, C-51,C-53,C-62)	
---	" - Paper .01 Mfd. + - 10% 400 V.(C-70)	
---	" - " .01 Mfd. + - 20% 200 V.(C-67,C-75)	
---	" - " .01 Mfd. + - 20% 400 V.(C-74)	
---	" - " .015 Mfd. + - 10% 200 V.(C-65,C-66)	
---	" - " .05 Mfd. + - 20% 200 V.(C-72)	
---	" - " .05 Mfd. + - 20% 400 V.(C-27,C-77)	
73747	Capacitor, electrolytic, 2 Mfd., 50 v. (C-60)	
S-5336	" " 10 Mfd. 300 v. (C-78) 20 Mfd. 50 v. (C-76) 40 Mfd. 450 v. (C79,C-80)	
S-5333	Condenser, gang condenser (C-1,C-15,C-16,C-22, C-23,C-28,C-29,C-36)	
S-5318	Coil - S.B. antenna coil (L-1)	
S-5321	" - S.B. R.F. coil (L-7)	
S-5324	" - S.B. Oscillator coil (L-4)	
S-5319	" - S.W.1 Antenna coil (L-2)	
S-5322	" - S.W.1 R.F. coil (L-8)	
S-5325	" - S.W.1 Oscillator coil (L-5)	
S-5320	" - S.W.2 Antenna coil (L-3)	
S-5323	" - S.W.2 R.F. Coil (L-9)	
S-5326	" - S.W.2 Oscillator coil (L-6)	
S-5329	Control - Volume control (R-34)	
S-5331	" - Low frequency tone control (R-42)	
S-5330	" - High frequency tone control & power switch (R-40, S-5)	
---	Resistor - 68 ohms +- 20% 1/2 watt (R-10)	
---	" - 100 ohms + - 5% 1/2 watt (R-26)	
---	" - 120 ohms + - 10% 1/2 watt (R-15)	
---	" - 270 " + - 10% 1/2 watt (R-41)	
---	" - 390 " + - 10% 2 watts (R-51)	
---	" - 1200 " + - 5% 1/2 watt (R-29)	
---	" - 1500 " + - 10% 1/2 watt (R-44,R-47)	
---	" - 2200 " + - 20% 1/2 watt (R-3,R-14,R-20)	
---	" - 3300 " + - 5% 1/2 watt (R-31)	
---	" - 6800 " + - 20% 1/2 " (R-53)	
---	" - 6800 " + - 10% 1/2 " (R-50)	

Stock No.	Description	List Price
	Chassis Assemblies (Cont'd.)	
---	Resistor - 10,000 ohms + - 10% 1/2 watt (R-28,R-25)	
---	" - 15,000 " + - 10% 1/2 " (R-27)	
---	" - 18,000 " + - 10% 1/2 " (R-9)	
---	" - 22,000 " + - 10% 2 " (R-6,R-35)	
---	" - 22,000 " + - 20% 1/2 " (R-4,R-17)	
---	" - 27,000 ohms + - 10% 1/2 watt (R-55,R-11)	
---	" - 33,000 " + - 20% 1/2 " (R-12)	
---	" - 33,000 " + - 10% 1/2 " (R-37)	
---	" - 39,000 " + - 5% 1/2 " (R-30)	
---	" - 39,000 " + - 10% 1 " (R-48)	
---	" - 39,000 " + - 10% 1/2 " (R-22)	
---	" - 180,000 " + - 10% 1/2 " (R-24)	
---	" - 220,000 " + - 10% 1/2 " (R-21,R-23)	
---	" - 220,000 " + - 20% 1/2 " (R-39)	
---	" - 270,000 " + - 10% 1/2 " (R-43)	
---	" - 470,000 " + - 10% 1/2 " (R-18,R-49)	
---	" - 470,000 " + - 20% 1/2 " (R-32,R-45,	
---	" 1 Magohm - 20% 1/2 w.(R-1,R-2,R-5,R-13)	
---	" 3.3 Megohms - 20% 1/2 w. (R-19)	
---	" 3.3 " - 10% 1/2 w. (R-36)	
---	" 3.9 " - 10% 1/2 w. (R-8)	
---	" 10.0 " - 20% 1/2 w. (R-33,R-45)	
---	" 22.0 " - 20% 1/2 w. (R-38)	
S-5334	Switch - range switch, (S-1,S-2,S-3,S-4)	
S-5327	Transformer - 1st I.F. Trans.(L-13,L-14,L-15,L-16, C-38,C-39,C-40,C-41)	
S-5328	" - 2nd I.F. Trans. (L-17,L-18,L-19, L-20,C-47,C-48,C-49)	
S-5332	" - Output transformer (T-2)	
S-4379	" - Power transformer (60 cycles) (T-1)	
S-4381	" - " " (25 cycles) (T-1)	
S-5554	" - Ratio Det. transformer (L-21,L-22, C-56)	
	Speaker Assembly	
S-5337	Cone - cone & voice coil assembly	
	Miscellaneous Assemblies	
S-5530	Bezel	
S-4313	Cord - dial cord (standard)	
S-5526	Decalcomania (for knobs)	
S-5527	" record storage drawer)	
S-5317	Dial - dial scale	
S-5534	Grille Cloth (12" x 8")	
S-3870	Knob - (Walnut) all knobs except for range switch knob	
S-5075	Knob - (Walnut) range switch knob	
S-5531	Knob - (Mahogany) All knobs except for range switch knob	
S-5532	Knob - (Mahogany) range switch knob	
S-5316	Loop - loop antenna	
S-5335	Pointer - station selector pointer	
S-5535	Handle - record drawer handle (both changers)	
S-5536	Door pulls - Album drawer pulls (both sides)	
S-5345	Track assy for changer (RP168)	
S-5533	Track assy for changer (RP-178)	
	Automatic Record Changer Assembly	
	Refer to RP-168 and RP-178 service notes for replacement parts and service data.	

Only items listed under stock numbers are available as Replacement Parts

All parts and prices subject to change or withdrawal without notice.

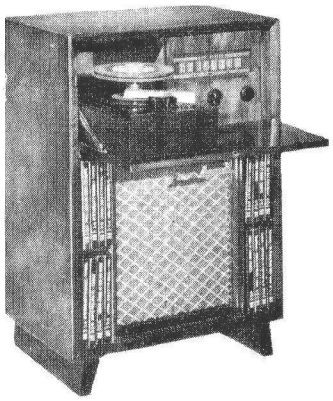

MODEL 9W501

RCA VICTOR

"HIS MASTER'S VOICE"

RADIO-PHONOGRAPH COMBINATION

MODEL 9W501 SERVICE DATA

—1949 NO. 18—

GENERAL SERVICE DIVISION
RCA VICTOR COMPANY LIMITED
MONTREAL, QUE.

Electrical and Mechanical Specifications

TUNING RANGE

Standard Broadcast ---------- 540-1600 KC
Intermediate Frequency ---------- 455 KC

TUBE COMPLEMENT

(1) Type 12SA7 ---------- Converter
(2) Type 12SF7 ----------I.F. Amplifier Det. & A.V.C.
(3) Type 12SC7 ----------Audio Phase Inverter
(4) Type 35L6GT ---------- Output
(5) Type 35L6GT ---------- Output

A Selenium rectifier is used.

Dial Lamps (2) ----------Mazda 47
Tuning Drive Ratio ----------11:1 (5½ turns of knob)

POWER SUPPLY RATING

Rating A-----105-125 Volts, 60 cycles, .40 amps. 46 watts
Rating B-----105-125 Volts, 25 cycles, .40 amps. 46 watts

LOUDSPEAKER

Size and type ----------8 in. P.M.
Voice coil impedance----------2.2 ohms at 400 cycles

POWER OUTPUT

Undistorted ----------2.5 watts
Maximum ----------3.5 watts

RECORD CHANGER (RP-168-A-1)

Turntable speed ----------45 r.p.m.
Record capacity ----------ten 7 in.
Pickup ----------Crystal (Medium output)

CABINET DIMENSIONS

Height ----------30 9/16 in.
Width ----------21¾ in.
Depth ----------14¼ in.



The Dial Scale drawing shown is a full size reproduction. It can be used as a reference in alignment procedure.

Fig. 1—Dial Scale

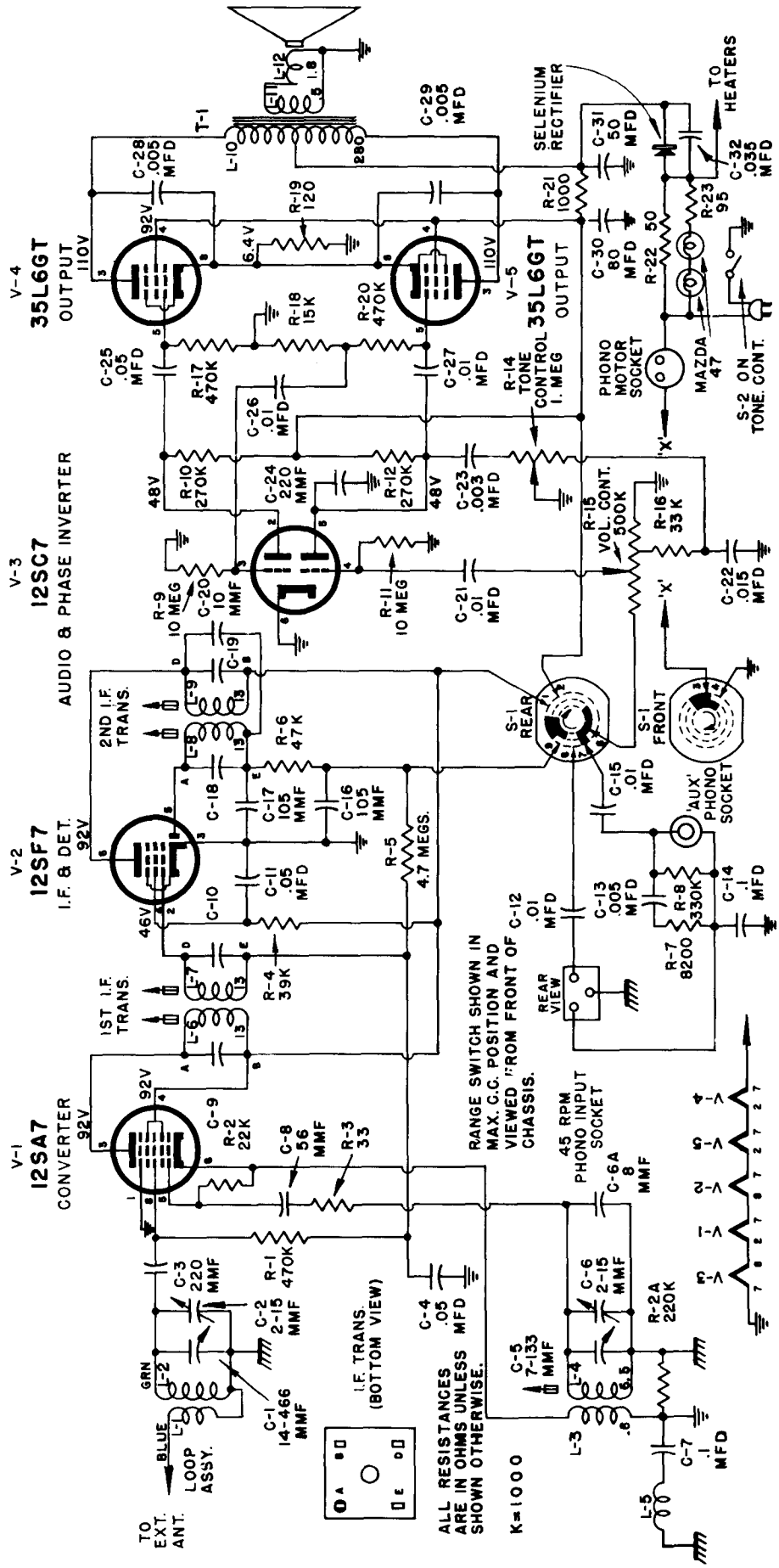

FIG. 2 — SCHEMATIC DIAGRAM

Since L-5 and C-7 form a tuned circuit which is resonant to the I.F. frequency, it should be noted that whenever C-7 is replaced, the winding on the outside of the old capacitor or a similar winding consisting of 10 turns of #23 wire, should be wound on the new capacitor and connected in series as shown on the schematic diagram. If this procedure is not followed, the set may be subject to I.F. regeneration.

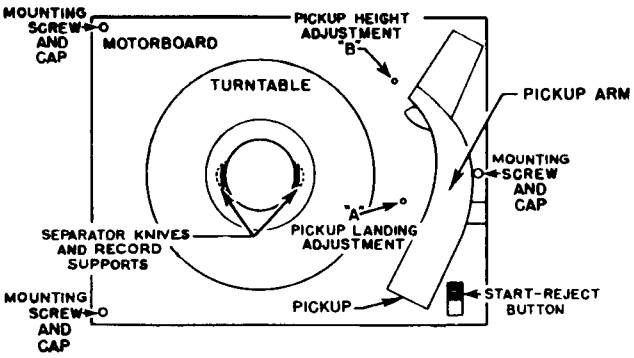

Fig. 3—Top View RP1681A-1 Record Changer

Pickup Landing Adjustment "A"

The pickup point should land half-way between the outer edge of the record and the first music groove.

If the pickup lands inside the starting grooves—turn screw "A" slightly clockwise. If pickup lands outside the starting grooves—turn screw "A" slightly counterclockwise.

Pickup Height Adjustment "B"

During cycle the pickup arm must rise high enough to clear a stack of ten records on the turntable, but not high enough to cause the top of the arm to touch records resting on the record supports.

If pickup does not clear a stack of ten records—turn screw "B" slightly clockwise. If pickup arm touches records on record supports—turn screw "B" slightly counter-clockwise.

Record Separators

In the out of cycle position the record separator knives or discs are normally concealed inside the center post. During service, the position of the star wheel on the underside of the record changer may be accidentally shifted; this may cause the separator knives to be extended when they should be concealed.

If the separator knives are thus extended—turn the power on so that the turntable is revolving, gently press fingers against the extended knives until they disappear inside the center post — DO THIS ONLY WHILE MECHANISM IS OUT OF CYCLE.

Care of Sapphire

The record changer sapphire is protected by a permanent metal guard. LINT MAY COLLECT TO CLOG THE OPENING IN THE GUARD AT THE SAPPHIRE POINT AND CAUSE POOR RECORD REPRODUCTION. This may require occasional cleaning of the guard opening—clean by carefully brushing with a small soft brush.

ALIGNMENT PROCEDURE

Before aligning the receiver, set the gang condenser for maximum capacity and then set the dial cursor on the calibration point at the extreme left hand end of the dial.

When only a portion of the circuit is to be aligned select the required portion and perform all the remaining steps.

In order to obtain best results, it is advisable to align the 455 KC I.F.'s with the help of a cathode ray oscilloscope. The scope should be connected across the volume control. If this equipment is not available, use the method outlined below in the alignment chart.

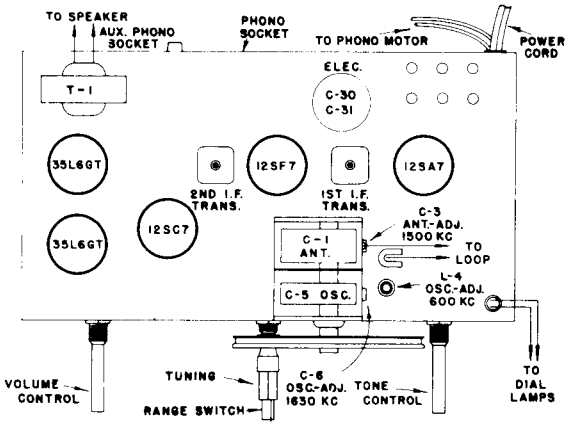

Fig. 4—Chassis Layout & Alignment Adj.

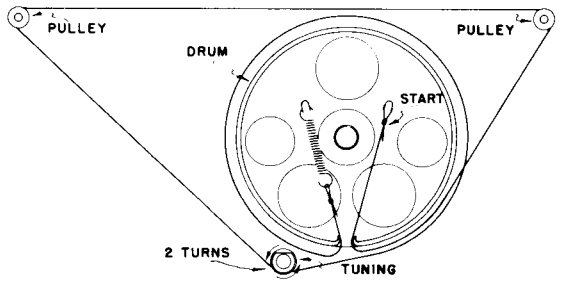

Fig. 5—Dial Cord Stringing

ALIGNMENT CHART

Order of Alignment		TEST OSCILLATOR				RECIEVER				
		Connect "HI" Side To	Connect "LO" Side To	Dummy Antenna	Frequency Setting	Range Selector	Receiver Dial Setting	Circuit To Adjust	Adjustment Symbols	Notes
I.F. Alignment	1	V-2, 12SF7 Pin #2	GND	IMFD	455KC	Radio	"HI" End	2nd I.F. Trans.	L-8, L-9	Max. Out.
	2	V-1, 12SA7 Pin #8	Same	Same	Same	Same	Same	1st I.F. Trans.	L-6, L-7	Same
	3	Repeat steps 1 and 2.								
S.B. Alignment	4	"Ant" Lead	GND	220 MMF	600 KC	Radio	600 KC	S.B.-Osc.	L-4 (Rock in to Loop)	Same
	5	Same	Same	Same	1630 KC	Same	1630 KC	S.B.-Osc.	C-6	Same
	6	Same	Same	Same	1500 KC	Same	1500 KC	S.B.-R.F.	C-2	Same
	7	Repeat Steps 4, 5 & 6.								

REPLACEMENT PARTS FOR MODEL 9W501

Insist on genuine factory tested parts, which are readily identified and may be purchased from authorized dealers.

Stock No.	Description	List Price
	CHASSIS ASSEMBLY	
S-5384	Capacitor - 8 MMF. +- 5 % (C-6A)	
S-5385	" - 10 MMF. +- 10 % 500 V. (C-20)	
S-4523	Capristor - 56 MMF. & 33 ohms (C-8, R-3)	
S-4614	" - 2 - 105 MMF. & 47,000 ohm (C-16, C-17, R-6)	
S-4221	Capacitor - 220 MMF. +- 20% 350 V.(C-3,C-24)	
	" - .003 Mfd. +- 10% 200 V. (C-23)	
	" - .005 Mfd. +- 10% 200 V. (C-13)	
	" - .005 Mfd. +- 10% 600 V. (C-28,C-29)	
	" - .01 Mfd. +- 20% 200 V. (C-12,C-15, C-21)	
	" - .01 Mfd. +- 20% 400 V. (C-26,C-27)	
	" - .015 Mfd. +- 10% 200 V. (C-22)	
	" - .035 Mfd. +- 10% 400 V. (C-32)	
	" - .05 Mfd. +- 20% 200 V. (C-4,C-11,C-25)	
	" - .1 Mfd. +- 10% 400 V. (C-14)	
	" - .1 Mfd. +- 10% 400 V. (C-7)	
S-5383	Condenser - Gang condenser (C-1,C-2,C-5,C-6)	
S-5284	Control - volume control (R-15)	
S-5269	Control - tone control & power switch (R-14,S-2)	
S-5286	Capacitor - electrolytic (C-30,C-31)(50-80 Mfd.)	
S-5283	Coil - Oscillator coil (L-3,L-4)	
	Resistor - 13.5 ohms at 104° C to 95 ohms at 38° C. +- 20% (R-23)	
	" - 50 ohms (R-22)	
	" - 120 " +- 10% 1 watt (R-19)	
	" - 1000 " +- 10% " (R-21)	
	" - 8200 " +- 10% ½ " (R-7)	
	" - 15,000 ohms +- 10% ½ watt (R-18)	
	" - 22,000 " +- 20% " (R-2)	
	" - 33,000 " +- 10% " (R-16)	
	" - 39,000 " +- 10% " (R-4)	
	" - 220,000 " +- 20% " (R-2A)	
	" - 270,000 " +- 10% " (R-10,R-12)	
	" - 330,000 " +- 10% " (R-8)	

Stock No.	Description	List Price
	CHASSIS ASSEMBLY (Cont'd)	
	Resistor - 470,000 ohms +- 10% watt (R-1)	
	" - 470,000 ohms +- 20% " (R-17,R-20)	
	" - 4.7 Megohm +- 20% watt (R-5)	
	" - 10.0 " +- 20% " (R-9,R-11)	
S-5381	Switch - Radio - Phono switch (S-1)	
S-5382	Selenium rectifier	
S-4487	Transformer - 1st I.F. Trans. (L-6,L-7,C-9,C-10)	
S-4662	" - 2nd I.F. " (L-8,L-9,C-18,C-19)	
S-5285	" - Output trans. (T-1,L-10,L-11)	
	SPEAKER ASSEMBLY	
S-4748	Cone & voice coil assy (L-12)	
	MISCELLANEOUS ASSEMBLY	
S-4313	Cord - dial cord (Standard)	
S-5281	Dial - dial scale	
S-4390	Knob - (walnut)	
S-5275	" - (mahogany)	
S-5276	" - (blonde)	
S-4387	" - (walnut)	
S-5277	" - (mahogany)	
S-5278	" - (blonde)	
S-3870	" - (walnut)	
S-5279	" - (mahogany)	
S-5280	" - (blonde)	
S-5282	Loop - loop assembly (L-1,L-2)	
S-5272	Pointer - dial pointer	
S-5377	Decalcomania - (on front door)	
	" - (range)	
	" - (below grille)	
S-5380	Grille cloth	

All parts and prices subject to change or withdrawal without notice.

Only items listed under stock numbers are available as Replacement Parts.



Model 9W653

RCA VICTOR

"HIS MASTER'S VOICE"

RADIO & DUAL PHONOGRAPH COMBINATION

MODEL 9W653

SERVICE DATA

—1950 No. 2—

GENERAL SERVICE DIVISION
RCA VICTOR COMPANY LIMITED
MONTREAL, QUE.

Electrical and Mechanical Specifications

TUNING RANGES

Standard Broadcast	540-1600 K.C.
Short Wave	5.8-18 MC.
Intermediate Frequency	455 K.C.

TUBE COMPLEMENT

(1) RCA 6BE6	Converter
(2) RCA 6BA6	I.F.
(3) RCA 6AV6	Audio
(4) RCA 6C4	Driver
(5) RCA 6K6GT	Output
(6) RCA 6X5GT	Rectifier
Dial Lamps	(2) Mazda 51
Tuning Drive Ratio	12 to 1 (6 turns of knob)

POWER OUTPUT

Undistorted	2.5 watts
Maximum	3.5 watts

LOUDSPEAKER

Type	8 inch P.M.
Voice coil impedance	2.2 ohms at 400 cycles

POWER SUPPLY RATINGS

Rating A—105-125 volts, 60 cycles, .50 Amps., 58 watts
Rating B—105-125 volts, 25 cycles, .50 Amps., 58 watts

CABINET DIMENSIONS

Height	31"
Width	26½"
Depth	16½"

PHONOGRAPH (RP168A-1)

Record capacity	Ten 7 in.
Turntable speed	45 R.P.M.
Pickup	6 volts at 1000 cycles across 1 Megohm load

PHONOGRAPH (RP-200)

Record capacity	Ten twelve inch or twelve ten inch
Turntable speed	33-1/3 or 78 R.P.M.
Pickup	1.4 volts at 4000 cycles across 500,000 ohm load

Refer to the RP168 and RP200 Service Notes for information on the 45 and 33⅓-78 R.P.M. record changers respectively.

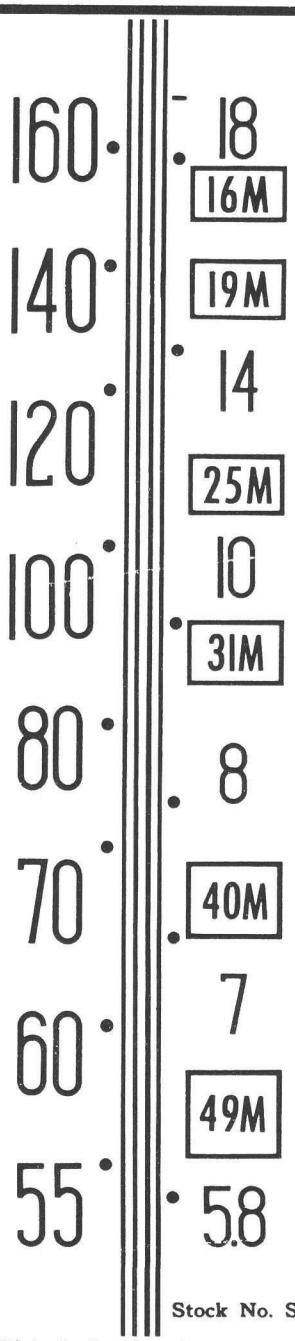

Stock No. S-5342

Fig. 1.—The Dial Scale Drawing shown is a full size reproduction. It can be used as a reference in alignment procedure.

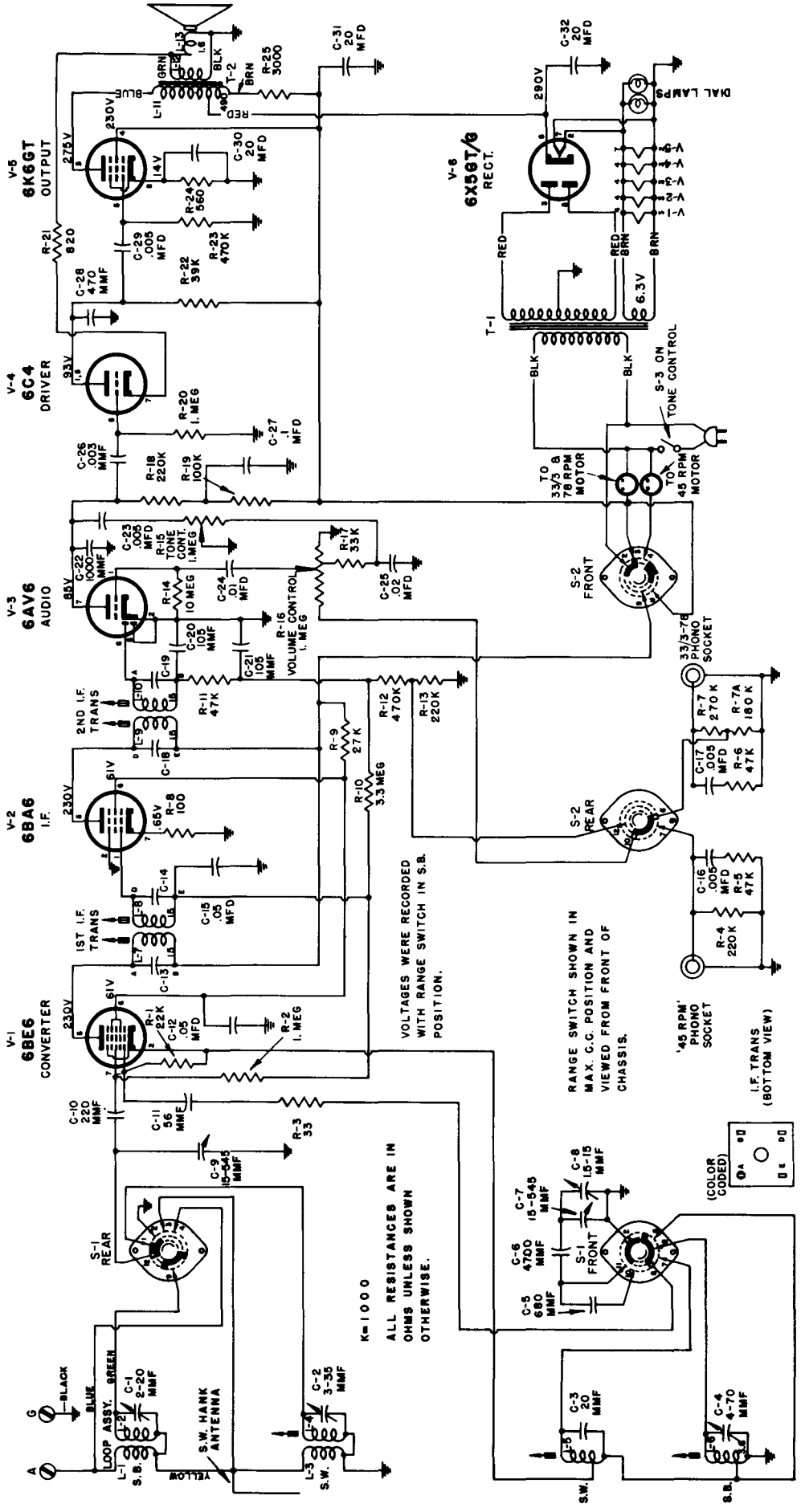

Fig. 2.—Schematic Diagram.

Alignment Procedure

Before aligning the receiver, set the gang condenser for maximum capacity and then set the dial cursor on the calibration point at the extreme left hand end of the dial.

When only a portion of the circuit is to be aligned select the required portion and perform all the remaining steps.

In order to obtain best results, it is advisable to align the 455 KC I.F.'s with the help of a cathode ray oscilloscope. The scope should be connected across the volume control. If this equipment is not available, use the method outlined below in the alignment chart.

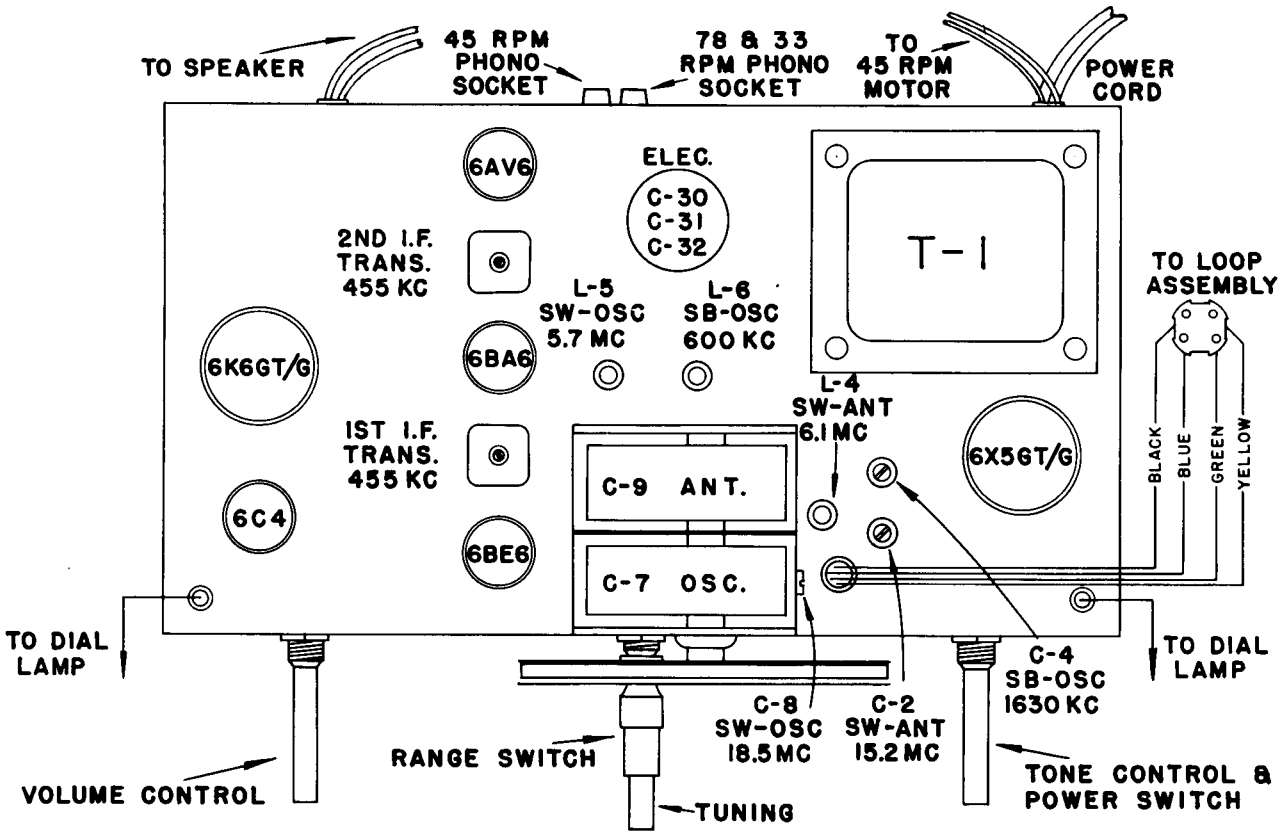

FIG. 3—CHASSIS LAYOUT AND ALIGNMENT ADJUSTMENT

ALIGNMENT CHART

ORDER OF ALIGNMENT		TEST OSCILLATOR				RECEIVER				
		CONNECT "HI" SIDE TO	CONNECT "LO" SIDE TO	DUMMY ANTENNA	FREQUENCY SETTING	RANGE SELECTOR	DIAL SETTING	CIRCUIT TO ADJUST	ADJUSTMENT SYMBOLS	NOTES
I.F. ALIGNMENT	1	Pin #1 6BA6	Gnd.	.1 mfd	455 KC	S.B.	"HI" END	2nd I.F. Trans.	Top & Bottom Slugs	Max. Out.
	2	Pin #7 6BE6	Same	Same	Same	Same	Same	1st I.F. Trans.	Top & Bottom Slugs	Same
	3	Repeat steps 1 & 2.								
S.W. ALIGNMENT	4	Ter. "A" on loop	Gnd.	300 ohms	5.7 Mc	S.W.	"LO" End	Osc.	L-5	Same
	5	Same	Same	Same	18.5 Mc	Same	"HI" End	Osc.	C-8	Same
	6	Same	Same	Same	6.1 Mc	Same	6.1 Mc	Ant.	L-4	Same
	7	Same	Same	Same	15.2 Mc	Same	15.2 Mc	Ant.	C-2	Same
	8	Repeat steps 4 to 7.						•		
S.B. ALIGNMENT	9	Same	Same	220 mmf	600 Kc	S.B.	600 Kc	Osc.	L-6 Rock In to Loop	Same
	10	Same	Same	Same	1630 Kc	Same	"HI" End	Osc.	C-4	Same
	11	Same	Same	Same	1500 Kc	Same	1500 Kc	Loop Trimmer	C-1*	Same
	12	Repeat steps 9 to 11								

* Align C-1 when receiver & loop assembly are in the cabinet.

REPLACEMENT PARTS FOR MODEL 9W653

Insist on Genuine Factory Tested Parts, which are readily identified and may be purchased from Authorized Dealers.

Stock No.	Description	List Price
	CHASSIS ASSEMBLY	
S-5363	Capacitor - Trimmer (C1,C4)	
31871	" - Ceramic 20 MMF,5%, 500V. (C3)	
S-4221	" - " 220 MMF,20%,350V.(C10)	
S-4819	" - " 470 MMF,20%,350V.(C28)	
14498	" - Mica - 680 MMF,5%,500V.(C5)	
S-5370	" - Ceramic 1000 MMF,20%,350V.(C22)	
S-4523	Capristor - 56 MMF and 33 Ohms (C11,R-3)	
S-4614	" - 2 of 105 MMF & 1-47000 Ohms (C20,C21,R11)	
39668	Capacitor - Mica-4700 MMF, 5%, 500V. (C6)	
	" - Paper.005 MFD,20%, 400V. (C23, C29)	
	" - Paper.005 MFD,10%, 200V. (C16, C17)	
	" - Paper.003 MFD,20%, 400V. (C26)	
	" - Paper.05 MFD,20%, 400V. (C12)	
	" - Paper.05 MFD,20%, 200V. (C15)	
	" - Paper.02 MFD,10%, 200V. (C25)	
	" - Paper.01 MFD,20%, 400V. (C24)	
	" - Paper.1 MFD,20%, 400V. (C27)	
S-5360	Condenser & Drum (C2,C9,C7,C8)	
S-5362	Capacitor-Electrolytic 20-20-20 MFD (C30,C31,C32)	
S-5351	Coil - S.W. Antenna Coil (L3,L4)	
S-5352	Coil - BC Oscillator Coil(L6)	
S-5353	Coil - S.W. Oscillator Coil (L5)	
	Resistors - 100 ohms 20% 1/4 watt (R8)	
	" - 180 " 20% 1/4 " (R7A)	
	" - 560 " 10% 1/2 " (R24)	
	" - 820 " 10% 1/4 " (R21)	
	" - 3000 " 5% 1 " (R25)	
	" - 47,000 " 10% 1/4 " (R6)	
	" - 22,000 " 20% 1/4 " (R1)	
	" - 27,000 " 10% 1 " (R9)	
	" - 33,000 " 10% 1/4 " (R17)	
	" - 39,000 " 10% 1/2 " (R22)	
	" - 47,000 " 10% 1/4 " (R5)	
	" - 100,000 " 20% 1/4 " (R19)	
	" - 220,000 " 10% 1/4 " (R13)	
	" - 220,000 " 20% 1/4 " (R4, R18)	
	" - 270,000 " 10% 1/4 " (R7)	
	" - 470,000 " 10% 1/4 " (R23)	
	" - 470,000 " 20% 1/4 " (R12)	

Stock No.	Description	List Price
	CHASSIS ASSEMBLY (Cont'd)	
	Resistors-1 Megohm 20% 1/4 watt (R2,R20)	
	" 3.3 " 20% 1/4 " (R10)	
	" 10 " 20% 1/4 " (R14)	
S-5358	Switch - Range (S1,S2)	
S-5344	Socket - Phono socket - dual	
S-4378	Transformer - Power 60 cycle (T1)	
S-4380	" " 25 " (T1)	
S-4487	" - 1st I.F.(C13,C14,L7,L8)	
S-4662	" - 2nd I.F.(C18,C19,L9,L10)	
S-5269	Tone Control (R15,S-3) 1.0 Megohm	
S-5356	Volume Control (R16) 1.0 Megohm	
S-5359	Transformer, Output - (T2) (1-11,1-12)	
	SPEAKER ASSEMBLY 8"	
S-4349	Cone - Cone & Voice Coil Ass'y. (L13)	
	MISCELLANEOUS ASSEMBLY	
S-4313	Cord - Dial cord	
S-5350	Dial Scale	
S-5323	Decal	
S-4390	Knob - Walnut (Tuning)	
S-4387	" - " (Range Selector)	
S-3870	" - " (Vol. and Tone Control)	
S-5275	" - Mahogany	
S-5277	" - "	
S-5279	" - "	
S-5276	" - Blonde	
S-5278	" - "	
S-5280	" - "	
S-5354	Loop - Loop assembly (L1,L2)	
S-5272	Pointer	
	AUTOMATIC RECORD CHANGER	
	Refer to RP168 Series Service Note for replacement parts and service data.	

Only items listed under stock numbers are available as Replacement Parts.

All parts and prices subject to change or withdrawal without notice.



RCA VICTOR

Record Demonstrator

MODEL 15E

Record Changer
and Two Speed Manual Turntable

SERVICE DATA

— 1951 No. 7 —

GENERAL SERVICE DIVISION
RCA VICTOR COMPANY LIMITED
MONTREAL, QUE.

Specifications

Tube Complement
1. RCA 6SQ7 ..... A.F. Amplifier
2. RCA 6SQ7 ..... Ph. Inverter
3. RCA 6V6GT ..... Output
4. RCA 6V6GT ..... Output
5. RCA 5Y3GT ..... Rectifier

Power Supply Rating
115 volts, 60 cycles ..... 80 watts

Power Output
Undistorted ..... 10 watts Maximum ..... 11 watts

Loudspeaker
Size and type ..... 12 inch P.M.
Voice coil impedance ..... 3.2 ohms @ 400 cycles

Pilot Lamp ..... Mazda #51, 6-8 volts, .2 amp.

Weight ..... 43 lbs. net

Cabinet Dimensions (overall)
Height ....17⅞" Width ....21½" Depth ....19⅞"

Record Players

Automatic (RP-190A-1)
Record capacity ..... up to 14 records
Type of records ..... RCA "45"
Pickup (Stock No. 75770) ..... crystal
Turntable speed ..... 45 r.p.m.

Manual
Record capacity ..... 1 record
Type of records ..... up to 12 inch diameter
Pickup (Stock No. 75475) ..... dual stylus crystal
Turntable speed ..... 33⅓ or 78 r.p.m.

RP-190A-1 Record Changer:

The record changer will play up to fourteen 45 r.p.m. records having a 1½ inch center hole. It is identical to RP-190-2a record changer except for the omission of the power switch.

FOR RECORD CHANGER SERVICE DATA — REFER TO RP-190 SERIES SERVICE DATA.

Manual Turntable:

The manual turntable will play one 33⅓ or 78 r.p.m. record up to twelve inches in diameter. The speed is controlled by a knob on the motorboard. The correct stylus is selected by a lever knob on the end of the pickup arm.

VOLUME CONTROL STOP

This instrument is provided with a volume control stop to provide a pre-determined "maximum" volume level and yet allow normal volume control operation up to the pre-determined "maximum."

Adjusting "Maximum" Volume Level:

With the instrument operating, remove the volume control knob. Note the extending ends of two coil springs (one light and one heavy) on the volume control shaft.

TO INCREASE

Turn control fully clockwise and then, with end of a pencil or similar item, press counterclockwise on the end of the LIGHT spring. Rotate control shaft clockwise until desired level is reached. Release pressure on the spring and replace knob.

TO DECREASE

Turn control fully clockwise and then, with the end of a pencil or similar item, press clockwise on the end of the HEAVY spring. Rotate control counterclockwise to a very low level. Increase volume to desired level as described above.

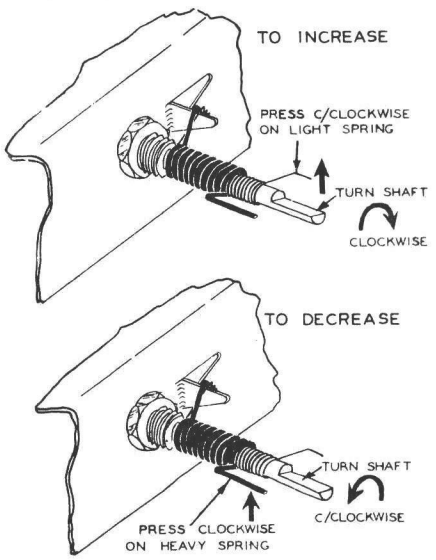

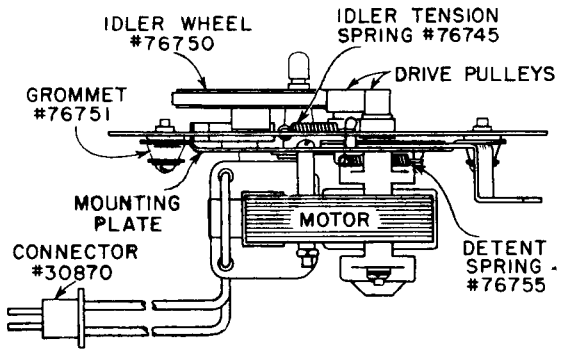

Manual Motorboard — Motor Assembly

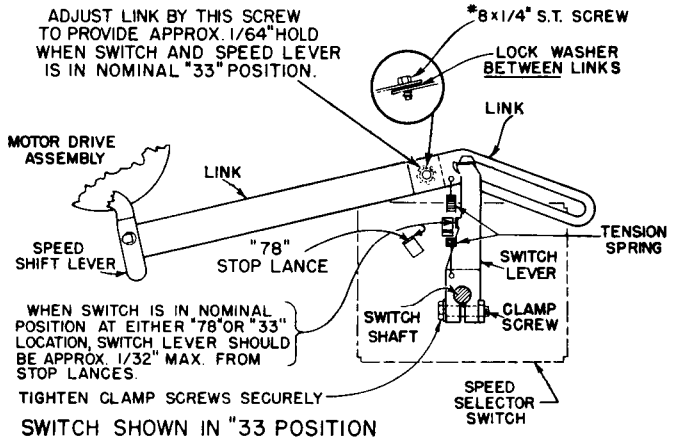

Speed Control Lever Assembly

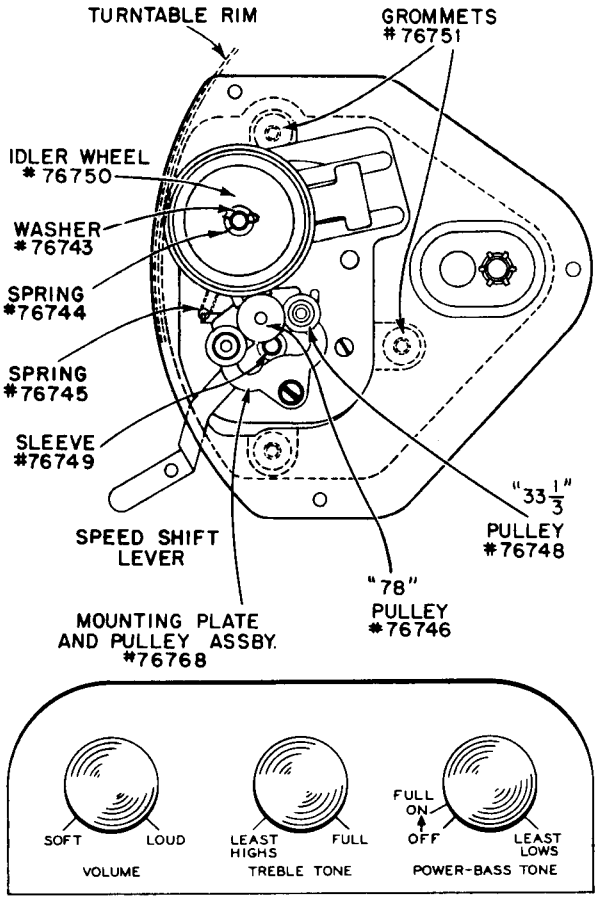

Controls

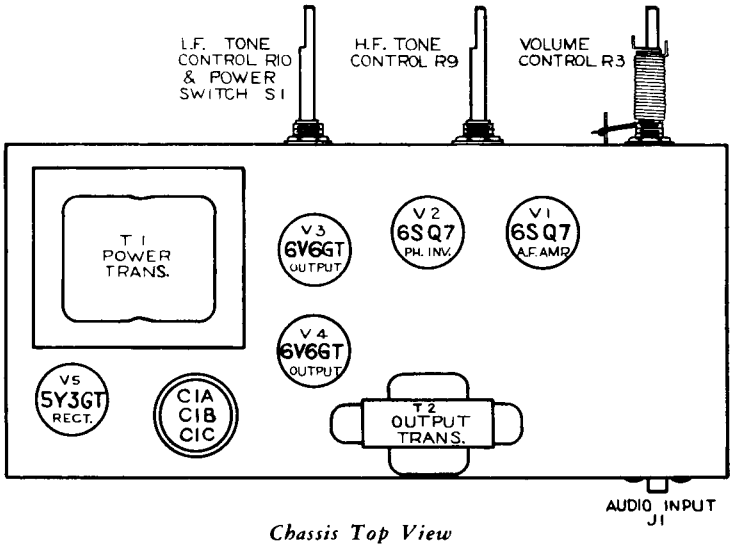

Chassis Top View

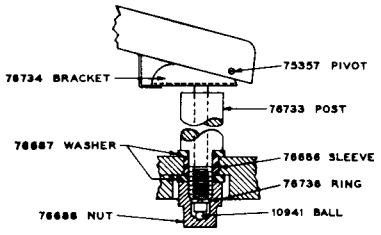

Pickup Arm Mounting — Manual Motorboard

MANUAL MOTORBOARD SERVICE HINTS

(a) Stylus force of pickup arm should be 8 to 10 grams. Insufficient force resulting from use of incorrect spring or pickup may allow stylus to jump grooves. Excessive force may cause distortion and record wear.

(b) Pickup arm pivots should be adjusted to provide a minimum of side play — yet allowing free vertical movement. Binding may cause stylus to jump groove.

(c) Inner surface of turntable rim must be clean and smooth. Idler wheel and drive pulleys must have no rough spots and be free of oil and grease. Roughness may cause rumble — oil may cause wow.

(d) Lubricate idler wheel and drive pulleys with a good quality light oil — one or two drops for each is sufficient.

(e) The pickup arm pivot shaft may be lubricated with a film of light oil. The pivot post rubber mounting should not be excessively compressed. The bearing nut should be tightened only enough to elevate the pivot shaft 1/32" above the post with the steel ball in place. This ball must be in place to permit free lateral pickup arm movement.

CRITICAL LEAD DRESS

1. Dress all filament leads next to chassis.
2. Dress power cord lead, from strain relief grommet to on-off switch, along side apron.
3. Dress A.C. leads at ON-OFF switch away from all audio components.
4. Dress output tube plate leads next to chassis.
5. Dress C8 next to chassis and wire with as short leads as practical.
6. Dress lead from arm of low frequency tone control to grid of V-3 away from A.C. leads at ON-OFF switch.

MODIFICATION

Although designed and assembled for 3-speed operation, provision is made for modification of this instrument for **33** and **45** rpm performance only. To eliminate the use of the **78 SPEED** control and **78** stylus, proceed as follows:

To alter SPEED SELECTOR control

Tie both pickup arms to their rests and place the instrument on its left side (not on control knobs) on a table. Through the opening in the bottom of the cabinet, disconnect the black power plug and the phono plug from its chassis connection. While supporting the top panel, remove the hex head screw and washer, centrally located beneath the top panel at the back of the cabinet.

Place cabinet upright, move **SPEED SELECTOR** to **45** position, then lift off top panel assembly.

From the back, the switch can be viewed from beneath the top panel and conversion effected as shown below. Bend the **33** stop to the vertical position of the adjacent **78** stop. The speed change lever (on left) should now halt against the vertical **33** stop, eliminating the **78** speed position.

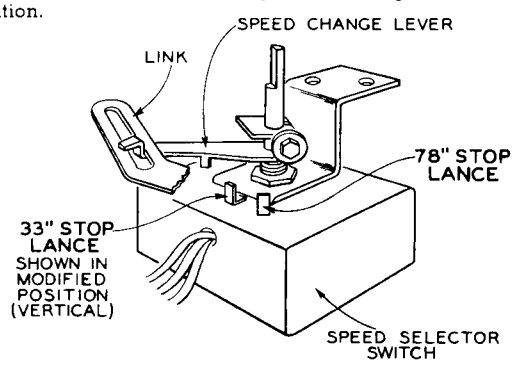

Replace top panel (rubber supporting grommets must be in place) and the hex head screw and washer.

NOTE: It is important that screw be tightened until top panel can be lifted approximately 1/16 inch only. The board should float freely on its mounts; there must be no restriction of movement.

Reconnect the black power plug and insert phono plug in the chassis socket. Place the instrument in the upright position and untie pickup arms.

To adapt STYLUS CONTROL LEVER —

With lever in **33** position, loosen left holding screw just enough to turn lug to the position shown below and tighten screw. This will prevent the **78** stylus from being turned for use.

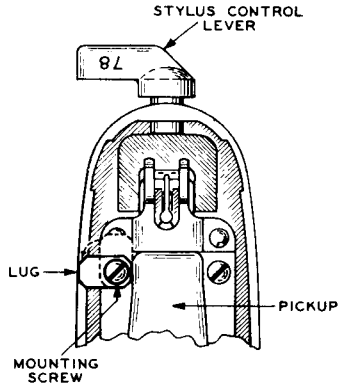

Before Operation —

Remove **SPEED SELECTOR** knob and turn over the **CIRCULAR PLATE** which will now show only **33 OFF 45** positions. Replace knob on shaft.

Reverse the left **INSTRUCTIONS PLATE** to read for **33** operation *only*.

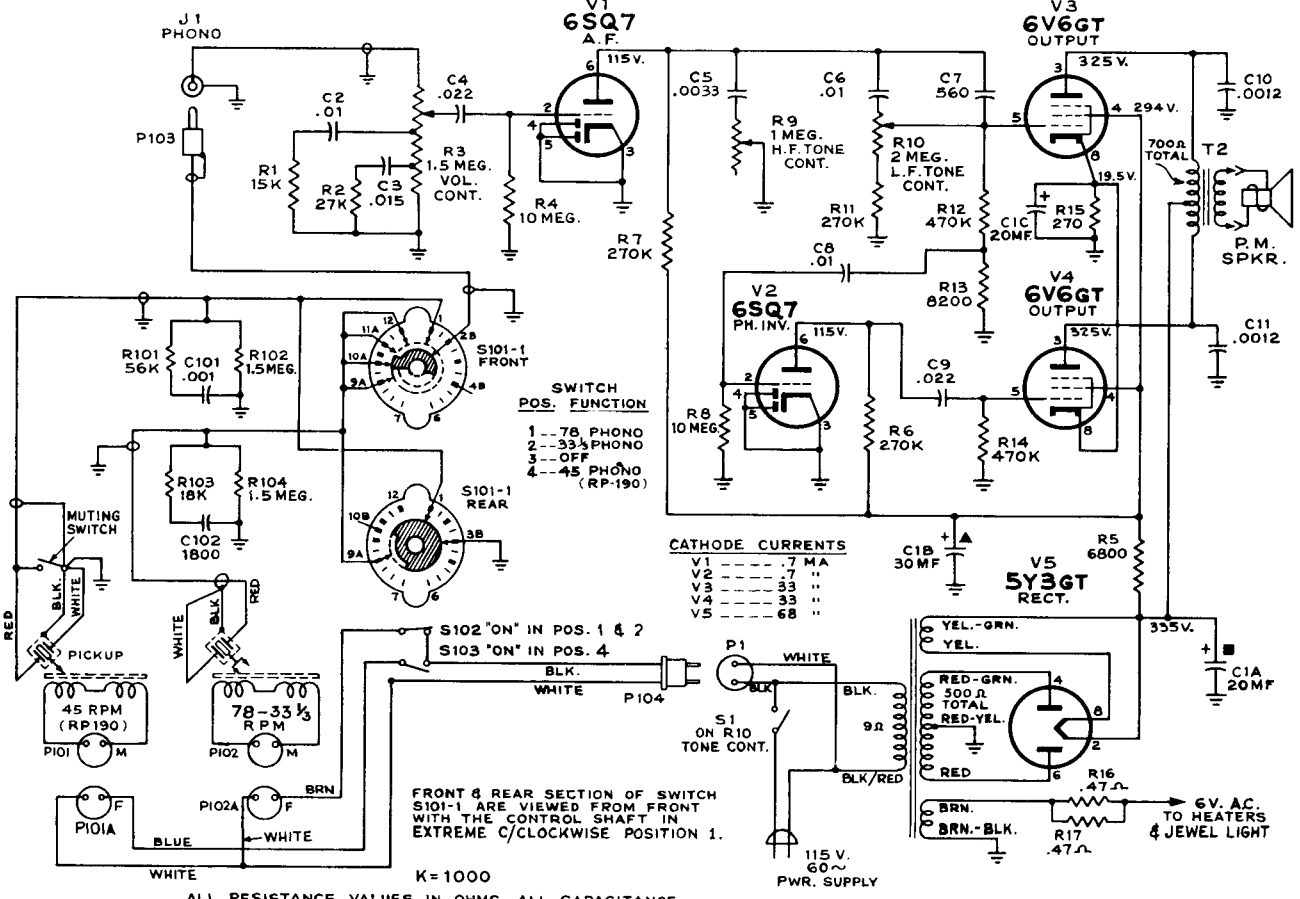

Schematic Diagram

Replacement Parts

STOCK No.	DESCRIPTION
	TWO SPEED MANUAL TURNTABLE
	Pickup Arm Assembly
76731	Arm—Pickup arm shell—less cartridge, mount, and cable
76734	Bracket—Pickup arm mounting bracket complete with pivot pin and counterbalance spring
76737	Cable—3 wire pickup arm cable complete with connectors
76738	Knob—Stylus selector knob complete with screw
76732	Mount—Pickup mount and swivel assembly
74230	Nut—#00-112 nut and washer to mount stylus
75475	Pickup—Dual stylus pickup crystal cartridge complete with two stylus
75366	Pin—Pivot pin for counterbalance spring
75357	Pivot—Pickup arm pivot (2 req'd)
76733	Post—Pickup arm pivot post and stop pin
76736	Ring—Retaining ring for pickup arm mounting bracket
71097	Screw—#4 x ¼" self tapping screw for pickup mount and swivel (4 req'd)
76735	Spring—Counterbalance spring
75497	Stylus—Osmium tip stylus for 78 RPM (not coded)
75496	Stylus—Osmium tip stylus for 33⅓ RPM (coded red)
	Motor and Turntable Assembly
30870	Connector—2 contact male connector for motor leads
76751	Grommet—Rubber grommet to mount motor (3 req'd)
76753	Motor—117 volt 60 cycle motor complete with mounting plate—less #76768 plate and idler wheel
76768	Plate—Speed control pulley mounting plate complete with pulleys
76746	Pulley—78 RPM pulley
76748	Pulley—33⅓ RPM pulley
76749	Sleeve—Spring sleeve for motor shaft
76755	Spring—Detent spring (below motor mounting plate)
76744	Spring—Hairpin spring to retain idler wheel
76745	Spring—Idler wheel tension spring (above motor mounting plate)
76752	Turntable—Finished turntable (9" dia.)
76743	Washer—Flat fibre washer for idler wheel
35969	Washer—"C" washer to retain turnable on shaft
76750	Wheel—Idler wheel
	45 R.P.M. AUTOMATIC RECORD CHANGER
	Same as listed for RP 190-2a in RP 190 Series Service Data except for the omission of the on-off switch and switch housing
	AMPLIFIER ASSEMBLIES
76685	Capacitor—Ceramic, 560 mmf. C7
71976	Capacitor—Electrolytic comprising 1 section of 20 mfd., 450 volts, 1 section of 30 mfd., 350 volts and 1 section of 20 mfd., 25 volts C1A, C1B, C1C
73850	Capacitor—Tubular, paper, oil impregnated, .0012 mfd., 1000 volts C10, C11
73795	Capacitor—Tubular, paper, .0033 mfd., 600 volts C5
73561	Capacitor—Tubular, paper, .01 mfd., 400 volts C2, C6, C8
73797	Capacitor—Tubular, paper, .015 mfd., 600 volts C3
73562	Capacitor—Tubular, paper, .022 mfd., 400 volts C4, C9
35787	Connector—Phono input connector (socket) J1
72776	Connector—Single contact male connector for speaker leads (2 req'd)
30868	Connector—2 contact female connector for motor power P1
38405	Control—H.F. tone control R9
38402	Control—L.F. tone control and power switch R10, S1
71980	Control—Volume control—less stop R3
74838	Grommet—Power cord strain relief (1 set)

STOCK No.	DESCRIPTION
76684	Resistor—Wire wound, 0.47 ohms, 1 watt R16, R17
	Resistors—Fixed, composition:—
523127	270 ohms, ±10%, 2 watts R15
523268	6800 ohms, ±10%, 2 watts R5
503282	8200 ohms, ±10%, ½ watt R13
503315	15,000 ohms, ±10%, ½ watt R1
503327	27,000 ohms, ±10%, ½ watt R2
503427	270,000 ohms, ±10%, ½ watt R6, R7, R11
503447	470,000 ohms, ±10%, ½ watt R12, R14
504610	10 megohm, ±20%, ½ watt R4, R8
31364	Socket—pilot lamp socket
54414	Socket—Tube socket
71979	Stop—Volume control adjustable stop (two springs)
76695	Transformer—Output transformer T2
75566	Transformer—Power transformer, 117 volt 60 cycle T1
	FUNCTION SWITCH ASSEMBLY
72437	Cable—Shielded audio cable complete with pin plug (switch to amplifier) P103
74850	Capacitor—Ceramic, 1800 mmf. C102
75643	Capacitor—Tubular, paper, .001 mf., 1000 volts C101
30868	Connector—Two contact female connector for motor cables P101A, P102A
30870	Connector—Two contact male connector for motor power cable P104
76693	Lever—Speed change lever (mounted on switch shaft)
	Resistors—Fixed composition:
503318	18,000 ohms, ±10%, ½ watt R103
503356	56,000 ohms, ±10%, ½ watt R101
503515	1.5 megohm, ±10%, ½ watt R102, R104
76694	Switch—Function switch—less speed change lever S101, S102, S103
	SPEAKER ASSEMBLIES
75023	Cap—Dust cap
76296	Cone—Cone and voice coil (3.2 ohms)
76389	Speaker—12" P.M. speaker complete with cone and voice coil (3.2 ohms)
	NOTE:—If stamping on speaker instrument does not agree with above speaker number, order replacement parts by referring to model number stamped on speaker and full description of part required.
	MISCELLANEOUS
X3240	Baffle—Baffle board and grille cloth
10941	Ball—Steel ball (⅛" dia.) for pickup arm mounting
71599	Bracket—Pilot lamp bracket
13103	Cap—Pilot lamp cap.
72113	Foot—Rubber foot (4 req'd)
75697	Grommet—Rubber grommet for mounting 45 RPM changer (3 req'd)
72856	Grommet—Rubber grommet for motor board (4 req'd)
74979	Knob—Selector switch knob—tan
72118	Knob—Tone control or volume control knob—brown
11765	Lamp—Pilot lamp—Mazda 51
76692	Link—Motor speed change link (bent-end section only)
76691	Link—Motor speed change link (slotted section only)
76688	Nut—Pickup arm pivot shaft bearing nut
73634	Nut—Speed nut for speaker mounting screws (4 req'd)
76689	Rest—Pickup arm rest (for 33⅓-78 RPM arm)
76686	Sleeve—Rubber sleeve (39/64 O.D. x 7/16" I.D. x 11/32") for pickup arm pivot post
14270	Spring—Retaining spring for knob 74057
30900	Spring—Retaining spring for knob 72118
76690	Spring—Speed change link and lever tension spring
76687	Washer—Rubber washer (13/16" O.D. x 7/16" I.D. x ⅛") for pickup arm pivot post (2 req'd)

APPLY TO YOUR RCA DISTRIBUTOR FOR PRICES OF REPLACEMENT PARTS

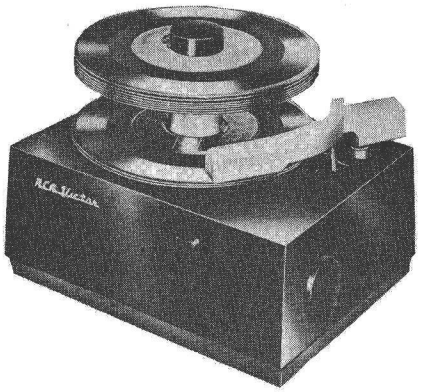

RCA VICTOR

RECORD PLAYER ATTACHMENT & PLAYER

MODEL VA45

SERVICE DATA

—1950 No. 8—

GENERAL SERVICE DIVISION
RCA VICTOR COMPANY LIMITED
MONTREAL, QUE.

Specifications

Record Changer (RP-168)

Turntable speed ..... 45 r.p.m.
Records used ..... RCA fine groove—7 in.
Record capacity ..... Up to 10 records
Pickup RMP-128-1—Stock No. 74067.. Crystal (medium output)

Power Supply Rating

115 volts, 60 cycles A.C. ..... 15 watts

Dimensions (overall)

Height 6⅝" Width 9⅛" Depth 6⅞"

Record Separator

In the out of cycle position the record separator knives or discs are normally concealed inside the center post. During service, the position of the star wheel on the underside of the record changer may be accidentally shifted; this may cause the separator knives to be extended when they should be concealed.

If the separator knives are thus extended—turn the power on so that the turntable is revolving, gently press fingers against the extended knives until they disappear inside the center post—**DO THIS ONLY WHILE MECHANISM IS OUT OF CYCLE.**

Note: This holds true only to mechanisms having the circular, rotating knives.

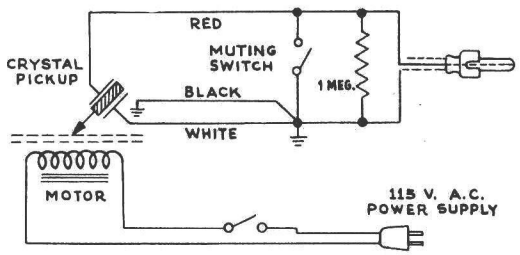

Schematic Diagram

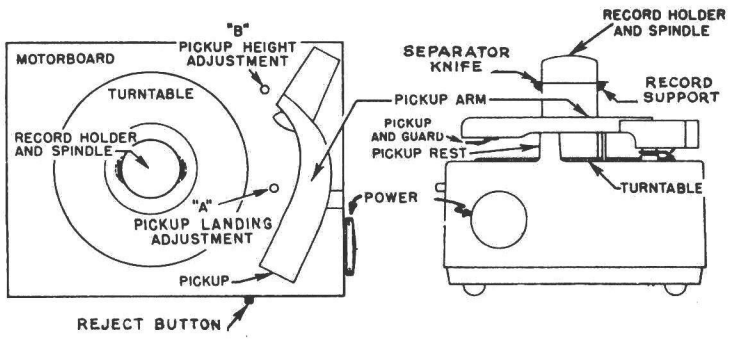

Top and Side Views

FOR RECORD CHANGER SERVICE INFORMATION—REFER TO RP-168 SERIES SERVICE DATA.

Pickup Landing Adjustment "A"

The pickup point should land half-way between the outer edge of the record and the first music groove.

If the pickup lands inside the starting grooves—turn screw "A" slightly clockwise. If pickup lands outside the starting grooves—turn screw "A" slightly counterclockwise.

Pickup Height Adjustment "B"

During cycle the pickup arm must rise high enough to clear a stack of eight records on the turntable, but not high enough to cause the top of the arm to touch records resting on the record supports.

If pickup does not clear a stack of eight records—turn screw "B" slightly clockwise. If pickup arm touches records on record supports—turn screw "B" slightly counterclockwise.

Record Changer Mounting

The cabinet is used as the motorboard of the record changer. The record changer is attached with three screws and bushings. THE PICKUP ARM MUST BE REMOVED BEFORE THE RECORD CHANGER CAN BE REMOVED.

REFER TO RP-168 SERIES SERVICE DATA.

REPLACEMENT PARTS LIST FOR MODEL VA45

STOCK No.	DESCRIPTION
	MISCELLANEOUS
74097	Bottom—Cabinet bottom cover
74189	Bushing—Shoulder bushing to mount mechanism in cabinet (3 required)
74098	Button—Reject button
S-5745	Cabinet—Plastic cabinet less bottom cover
74296	Cable—Shielded pickup cable complete with pin plug
74674	Emblem—"RCA Victor" emblem
31051	Foot—Rubber foot (4 required)
73490	Knob—Power switch knob
——	Resistor—Fixed, composition: 1 megohm, ±10%, ½ watt
14270	Spring—Retaining spring for knob
74871	Switch—Power switch

FOR PRICES REFER TO PUBLISHED REPLACEMENT PARTS PRICE LISTS

Connecting Record Changer Attachment to Radio Receivers

RCA Radios with Phono Jack

Plug male connector on the end of the "Phono" lead into the female connector on the receiver chassis. If set is provided with a phono switch, push or turn the "Phono" switch to "Phono" position, and operate the Record Changer Attachment according to instructions. If no switch is provided, use maximum setting of volume control on attachment, and minimum setting of radio volume control which will give acceptable volume, and tune receiver off frequency from any very strong station. In some instances the radio volume control will have the effect of a tone control.

RCA Type No. S-5097 Record Player Selector

This selector switch may be used for combined operation of two record players through one phono input jack. A choice of two types of input jacks and output cable plugs are provided.

Radio-Phonograph Combinations

Most radio-phonograph combinations use resistors and/or capacitors for tone compensation in the phono input circuit.

Where unsatisfactory reproduction is obtained with Model 45J connected into the phono jack of such instruments, we suggest that Model 45J be connected as indicated for radios which do not have a phono jack.

Radios Without Phono Jack

Methods of connecting the Record Changer Attachment to various types of audio systems are given in the accompanying text and illustrations. The data given requires that an RCA Type S-4200 Radio-Phono switch be used for switching from radio to phonograph, as desired. For ease in connecting the "phono" lead to the switch, the male plug on the end of the lead matches the phono jack on the switch.

In general, the Record Changer Attachment must be used with radio receivers having at least two stages of high-gain audio amplification. The output of the Record Changer Attachment should be connected to the input of the first audio tube, and at the same time the output of the radio receiver portion of the chassis should be shorted or opened, to prevent radio signals being heard while the Record Changer Attachment is in operation.

Installation of Switch

Fasten the bracket to the cabinet in such a position that the switch may be easily reached. For wooden cabinets, a suggested place is the upper rear edge of the cabinet. If the radio has a plastic cabinet, the bracket may be fastened to the chassis by self-tapping screws or soldering. **In the case of a.c.-d.c sets, the bracket should not be fastened to the chassis.** In such cases, a wooden block may be fastened to the chassis and the bracket screwed to the wooden block, care being exercised that there is no metallic path from the bracket to the chassis.

Connect the braided shield extension to the radio chassis by either soldering or placing the spade lug under a mounting screw.

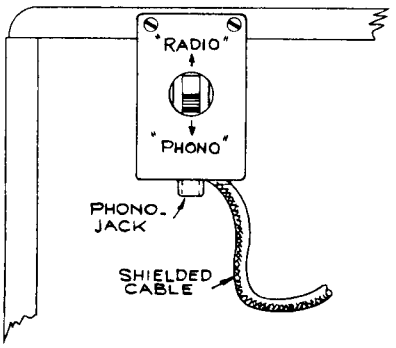

On a.c.-d.c. sets it is necessary to isolate the cable shield from the chassis. This is best done by connecting the shield to the chassis through a .1 mfd. 400-volt condenser. Care should be taken that the shield braiding and switch bracket do not come in contact with the chassis.

If the common-negative wiring in the a.c.-d.c. set is isolated from the set chassis, connect the cable shield, through a .1 mfd. capacitor, to the common-negative wiring, and not to the chassis.

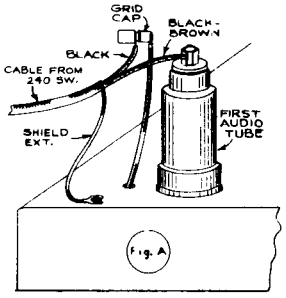

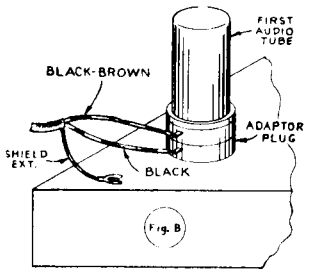

Note:

If late production models are connected to a radio set as shown in Fig. A & B, it will probably be necessary to substitute a volume control in place of the 1 meg. fixed resistor, since majority of sets do not have a volume control following the first audio tube.

For radio receivers in which the 1st-audio tube has a top grid cap—see Fig. A:

1. Disconnect the grid lead from the first audio tube.
2. Connect the cap on the black lead to the clip on the grid lead, as shown above.
3. Connect the clip on the black-brown lead to the grid cap at the top of the 1st-audio tube, bending the terminal if necessary to proper size for a metal tube cap.
4. Insert the plug on the end of the record player lead into the jack on the bracket.
5. Secure or position the connection cable assembly so that the cap and clip terminals are well separated from each other and other metal parts.

For radio receivers in which the 1st-audio tube is type 6SQ7, 6SR7, 12SQ7 or 12SR7—see Fig. B:

1. Use adaptor plug RCA Stock No. 37798.
2. Remove the 1st-audio tube.
3. Solder the switch leads to the adaptor plug terminals—black to bottom lug—black-brown to top lug.
4. Tape terminals to prevent short circuits when installed in set.
5. Insert the adaptor into the 1st-audio tube socket.
6. Insert the 1st-audio tube into the adaptor.
7. Insert the plug on the end of the record player lead into the jack on the bracket.

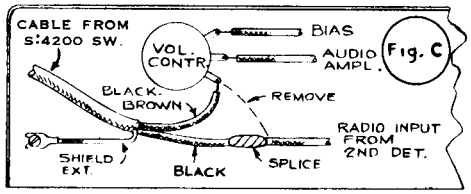

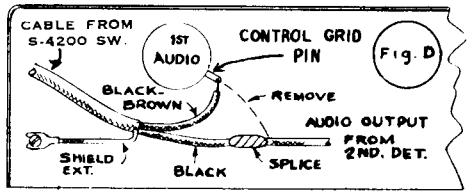

For other radio receivers in which the 1st-audio tube does not have a grid cap; connection to volume control input—see Fig. C, connection to 1st-audio tube control grid—see Fig. D:

1. Unsolder the lead from the volume control lug indicated in Fig. C or from the control grid pin indicated in Fig. D. It is usually necessary to remove the chassis from the cabinet to do this.
2. Solder the black-brown lead (remove clip) to the lug or pin disconnected in Step 1.
3. Solder the black lead (remove plug) to the lead disconnected in Step 1. Tape the joint to prevent short circuits.
4. Insert the plug on the end of the record player lead into the jack on the bracket.

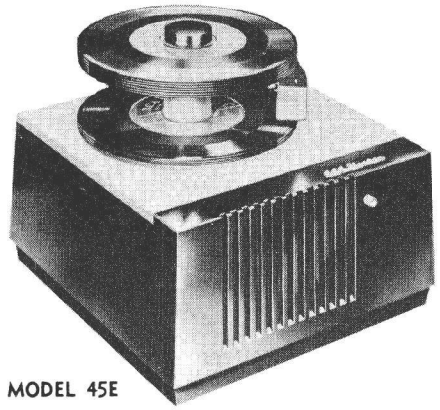

MODEL 45E

RCA VICTOR

"HIS MASTER'S VOICE"

RECORD CHANGER

MODEL 45E

SERVICE DATA

1950 NO. 23

GENERAL SERVICE DIVISION
RCA VICTOR COMPANY LIMITED
MONTREAL, QUE.

Electrical and Mechanical Specifications

MODEL 45E (Record Changer RP-168-1)

Turntable speed	45 R.P.M.
Records used	Fine groove—7 in.
Record capacity	10 Records
Pickup	Crystal (Medium output)

POWER SUPPLY RATING	45E
115 Volts, 25 or 60 cycles A.C.	45 watts

TUBE COMPLEMENT

1) Type 12AV6	Amplifier
2) Type 50C5	Output
3) Type 35W4	Rectifier

LOUDSPEAKER

Size and Type	4 in. P.M.
Voice coil impedance	3.20 ohms at 400 cycles

POWER OUTPUT

Undistorted	1.0 watt
Maximum	1.25 watts

DIMENSIONS (Overall)	Height	Width	Depth
45E	7 5/8"	9 1/16"	9 5/8"

REPLACEMENT PARTS FOR MODEL 45E

Insist on Genuine Factory Tested Parts, which are readily identified and may be purchased from Authorized Dealers.

STOCK NO.	DESCRIPTION
	CHASSIS ASSEMBLY
	Capacitor, .0047 Mfd. ± - 10% 600V. (C-4)
	" .01 Mfd. ± - 20% 200 V. (C-3)
	" .018 Mfd. ± - 10% 200V. (C-6)
	" .047 Mfd. ± - 20% 400V. (C-8)
	" .1 Mfd. ± - 20% 400V. (C-7)
*S-6092	" Electrolytic 50 - 80 Mfd. (C-5A, C-5B)
	Resistor 33 ohms ± - 20% (R-11)
S-4996	" 120 " ± - 10% S.W. W.W. (R-7)
	" 150 " ± - 10% ½W. (R-9)
	" 2700 " ± - 10% ½W. (R-10)
	" 270K. ± - 10% ½W. (R6,R8)
	" 470K. ± - 20% ½W. (used on 25 cycles only across muting switch.
	" 4.7 Meg. ohms, ± - 20% ½W. (R-5)
38406	Volume Control (R-3)
S-5033	Transformer - Output trans. (T-1)
	SPEAKER ASSEMBLIES
S-5829	Speaker
S-5575	Cone & Voice Coil Assy

STOCK NO.	DESCRIPTION
	MISCELLANEOUS ASSEMBLIES
*S-6090	Base, cabinet base
S-5037	Baffle
*S-6089	Cabinet
S-5036	Cable - pickup cable
S-5039	Cable - 2 pin plug & cable assy.
S-3467	Cord - power cord
S-5751	Knob
S-5661	Monogram "RCA Victor"
74192	Plug - pickup cable plug
30868	" - 2 pin socket for motor cable
30870	" - 2 pin plug
S-6091	Speaker bracket assy.
S-4992	Trip lever assy.
	AUTOMATIC RECORD CHANGER MECHANISM
	Refer to the RP-168 Series service note, Issue No. 2 for replacement parts & service data.
	* Indicates new stock items

Only items listed under stock numbers are available as Replacement Parts.
All parts subject to change or withdrawal without notice.

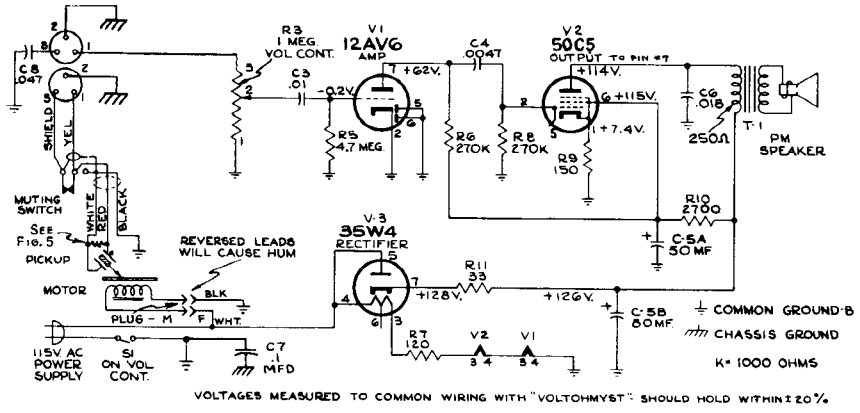

Fig. 1 Schematic Diagram

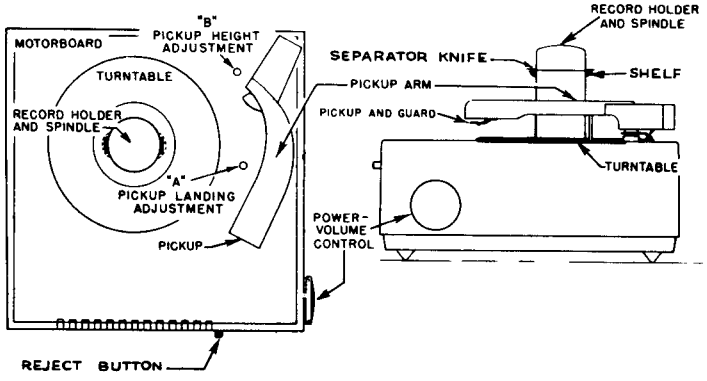

Fig. 2 Top View

Fig. 3 Side View

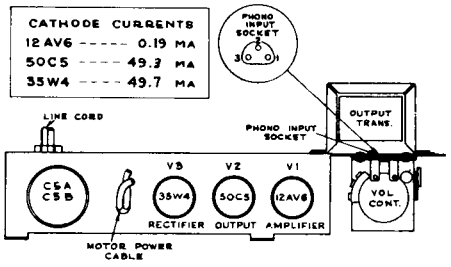

Fig. 4 Chassis Layout

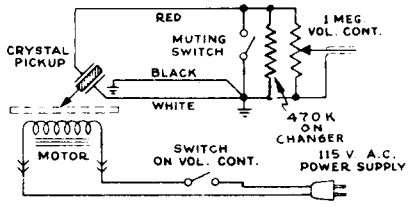

Fig. 5 Phono Input Connection (25 Cycle Input)

Pickup Landing Adjustment "A"

The pickup point should land half-way between the outer edge of the record and the first music groove.

If the pickup lands inside the starting grooves—turn screw "A" slightly clockwise. If pickup lands outside the starting grooves—turn screw "A" slightly counterclockwise.

Pickup Height Adjustment "B"

During cycle the pickup arm must rise high enough to clear a stack of eight records on the turntable, but not high enough to cause the top of the arm to touch records resting on the record supports.

If pickup does not clear a stack of eight records—turn screw "B" slightly clockwise. If pickup arm touches records on record supports—turn screw "B" slightly counterclockwise.

Record Changer Mounting

The cabinet is used as the motor board of the record changer. The record changer is attached to the cabinet with three screws, grommets and spacers. THE PICKUP ARM MUST BE REMOVED BEFORE THE RECORD CHANGER CAN BE REMOVED—REFER TO RP-168 SERIES SERVICE DATA. (Issue No. 2)

To Remove Chassis

Remove the four screws at the corners of the bottom cover, separate the motor power plug and socket and remove the pickup cable from its socket on the amplifier chassis.

Elongated holes permit the speaker position to be adjusted. If the speaker should be replaced or its mounting bracket loosened, the speaker mounting bracket screws should not be tightened until after the bottom cover is assembled to the cabinet.

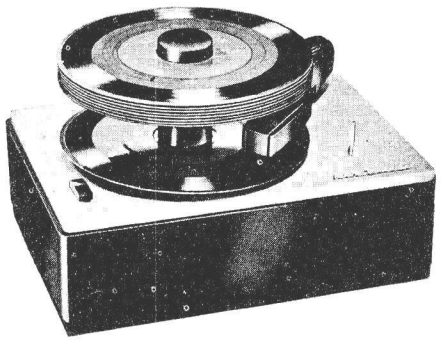

RCA VICTOR

RECORD CHANGER ATTACHMENT

MODEL 45-J-2

SERVICE DATA

—1951 No. 5—

GENERAL SERVICE DIVISION
RCA VICTOR COMPANY LIMITED
MONTREAL, QUE.

SPECIFICATIONS

Record Changer (RP190-1)

Turntable speed.....45 r.p.m.
Records used.....RCA fine groove—7 in.
Record capacity .....Up to 12 records
Pickup (Stock No. 75476).....Crystal (medium output)

Power Supply Rating

115 volts, 60 cycles A.C.....15 watts.

Dimensions (overall)

Height 7¼" Width 10½" Depth 7½"

FOR RECORD CHANGER SERVICE INFORMATION—REFER TO RP-190 SERIES SERVICE DATA.

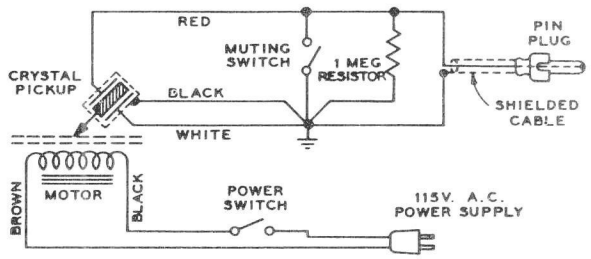

Figure 3—Schematic Diagram

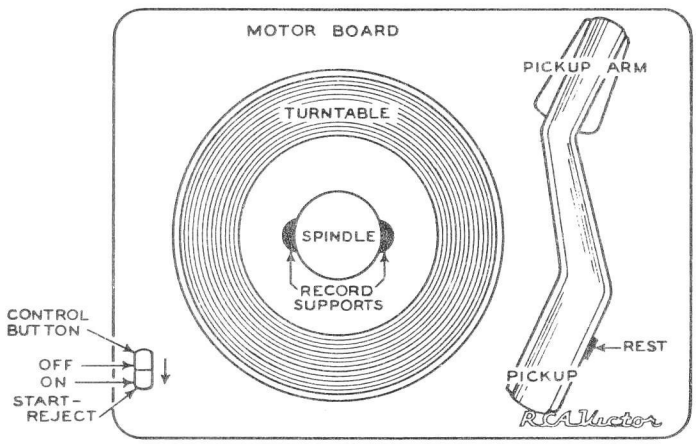

Figure 1—Top View

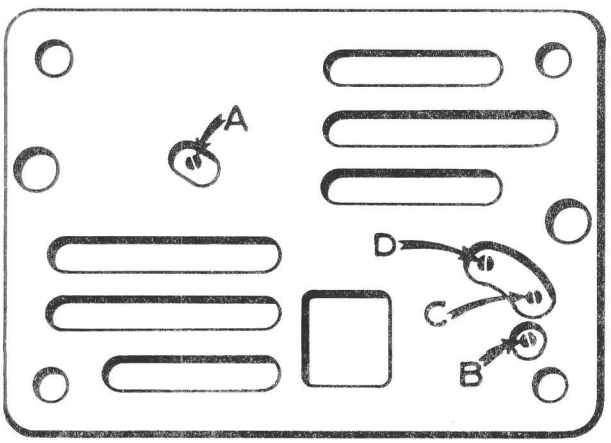

Figure 2—Bottom View

ADJUSTMENTS

Adjustments may readily be made with a screw driver according to the following instructions (see Figure 2).

Record Dropping—If record does not drop automatically, turn screw "A" counterclockwise slightly, but not more than ¼ turn.

Pickup Height—If pickup lifts too high so as to strike records on spindle, turn screw "B" counterclockwise. If it fails to lift after playing last record, turn clockwise. (Pickup point should be approximately 1¼" above turntable at maximum height during change cycle.)

Landing—If pickup lands too far in on record, turn screw "C" counterclockwise. If it fails to land in far enough on record, turn clockwise.

Tripping—If pickup lifts before reaching final record groove, turn screw "D" counterclockwise slightly. If pickup fails to lift, turn clockwise slightly.

REPLACEMENT PARTS

STOCK No.	DESCRIPTION
S-6171	Cabinet—Plastic cabinet—maroon
74296	Cable—Shielded pickup cable complete with pin plug
70392	Cord—Power cord and plug
31051	Foot—Rubber foot (4 required)
——	Resistor—Fixed, composition; 1 megohm, ±10%, ½ watt

APPLY TO YOUR RCA DISTRIBUTOR FOR PRICES OF REPLACEMENT PARTS.

Connecting Record Changer Attachment to Radio or Television Receivers

In general, the Record Changer Attachment must be used with receivers having at least two stages of high-gain audio amplification. The output of the Record Changer Attachment should be connected to the input of the first audio tube, and at the same time the output of the detector portion of the receiver should be shorted or opened, to prevent radio signals being heard while the Record Changer Attachment is in operation.

RCA Radios or Television Receivers with Phono Jack

Plug male connector on the end of the "Phono" lead into the female connector on the receiver chassis. If set is provided with a phono switch, push or turn the "Phono" switch to "Phono" position, and operate the Record Changer Attachment according to instructions. If no switch is provided, use minimum setting of receiver volume control which will give acceptable volume, and tune receiver off frequency from any very strong station. In some instances the radio volume control will have the effect of a tone control.

Radios Without Phono Jack

Methods of connecting the Record Changer Attachment to various types of audio systems are given in the accompanying text and illustrations. The data given requires that an RCA Stock #S-4200 Radio-Phono switch be used for switching from radio to phonograph, as desired. For ease in connecting the "Phono" lead to the switch, the male plug on the end of the lead matches the phono jack on the switch.

Note:

If connected to a radio or television set as shown in Figs. A or B, it will probably be necessary to substitute a volume control in place of the 1 meg. fixed resistor in Model 45-J-2, since majority of receivers do not have a volume control following the first audio tube.

Installation of Switch

Fasten the bracket to the cabinet in such a position that the switch may be easily reached. For wooden cabinets, a suggested place is the upper rear edge of the cabinet. If the radio has a plastic cabinet, the bracket may be fastened to the chassis by self-tapping screws or soldering. **In the case of a.c.-d.c. sets, the bracket should not be fastened to the chassis.** In such cases, a wooden block may be fastened to the chassis and the bracket screwed to the wooden block, care being exercised that there is no metallic path from the bracket to the chassis.

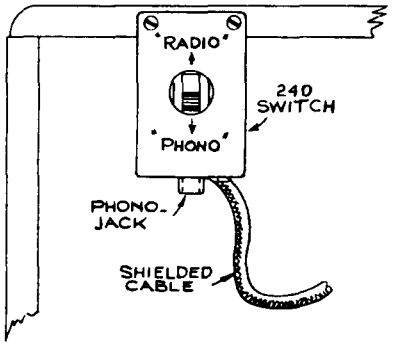

Connect the braided shield extension to the radio chassis by either soldering or placing the spade lug under a mounting screw.

On a.c.-d.c. sets it is necessary to isolate the cable shield from the chassis. This is best done by connecting the shield to the chassis through a .1 mf. 400-volt condenser. Care should be taken that the shield braiding and switch bracket do not come in contact with the chassis.

If the common-negative wiring in the a.c.-d.c. set is isolated from the set chassis, connect the cable shield, through a .1 mfd. capacitor, to the common-negative wiring, and not to the chassis.

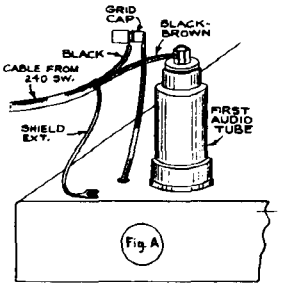

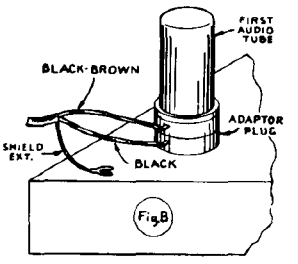

For receivers in which the 1st-audio tube has a top grid cap—see Fig. A:

1. Disconnect the grid lead from the first audio tube.
2. Connect the cap on the black lead to the clip on the grid lead, as shown above.
3. Connect the clip on the black-brown lead to the grid cap at the top of the 1st-audio tube, bending the terminal if necessary to proper size for a metal tube cap.
4. Insert the plug on the end of the record player lead into the jack on the bracket.
5. Secure or position the connection cable assembly so that the cap and clip terminals are well separated from each other and other metal parts.

For receivers in which the 1st-audio tube is type 6SQ7, 6SR7, 12SQ7 or 12SR7—see Fig. B:

1. Use adaptor plug RCA Stock No. 37798.
2. Remove the 1st-audio tube.
3. Solder the switch leads to the adaptor plug terminals—black to bottom lug—black-brown to top lug.
4. Tape terminals to prevent short circuits when installed in set.
5. Insert the adaptor into the 1st-audio tube socket.
6. Insert the 1st-audio tube into the adaptor.
7. Insert the plug on the end of the record player lead into the jack on the bracket.

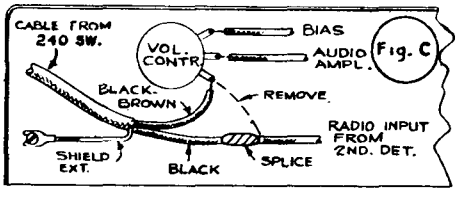

For other radio receivers in which the 1st-audio tube does not have a grid cap; connection to volume control input—see Fig. C:

1. Unsolder the lead from the volume control lug indicated in Fig. C. It is usually necessary to remove the chassis from the cabinet to do this.
2. Solder the black-brown lead (remove clip) to the lug or pin disconnected in Step 1.
3. Solder the black lead (remove plug) to the lead disconnected in Step 1. Tape the joint to prevent short circuits.
4. Insert the plug on the end of the record player lead into the jack on the bracket.

Radio-Phonograph Combinations

RCA Stock No. S-5097 Record Player Selector Switch may be used to select the output of two record changers for connection to one phono input jack. A choice of two types of input jacks and output cable plugs is provided.

Most radio-phonograph combinations use resistors and/or capacitors in their phono input circuit for tone compensation purposes. This may result in unsatisfactory reproduction from Model 45-J-2 when connected to the phono jack of such instruments. In such cases it is suggested that Model 45-J-2 be connected as indicated for instruments not having a phono jack.

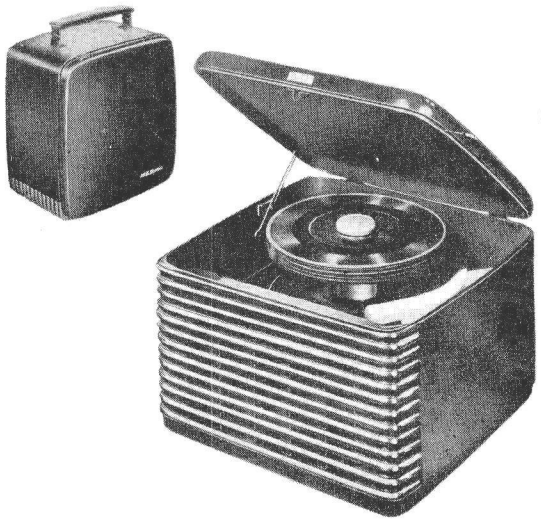

RCA VICTOR

AUTOMATIC RECORD PLAYER

MODEL 45-EY-3

SERVICE DATA

—1951 No. 6—

GENERAL SERVICE DIVISION
RCA VICTOR COMPANY LIMITED
MONTREAL, QUE.

FOR RECORD CHANGER SERVICE INFORMATION — REFER TO RP-190 SERIES SERVICE DATA.

Specifications

The instrument incorporating amplifier RS-136 uses

Crystal (See Parts List)
Motor (special) 85 volt RCA Stock No. 75937

Tube Complement for RS-136

1. RCA 6SQ7 ..... Amplifier
2. RCA 25L6-GT ..... Output

The instrument incorporating amplifier RS-136A uses

Crystal (See Parts List)
Motor 115 volt RCA Stock No. 75760

Tube Complement for RS-136A

1. RCA 12SQ7 ..... Amplifier
2. RCA 50L6-GT ..... Output
3. RCA 35Z5-GT ..... Rectifier

Loudspeaker

Size and type ..... 4x6" P.M.
Voice coil impedance ..... 3.2 ohms at 400 cycles

Power Supply Rating

RS-136, 115 volts, 60 cycles A.C. ..... 45 watts
RS-136A, 115 volts, 60 cycles A.C. ..... 50 watts

Power Output

Undistorted ..... 1.25 watts Maximum ..... 1.77 watts

Dimensions (over-all)

Height, 7⅝" Width, 11½" Depth, 12⅛"

Record Changer

{ RP-190-1 used with (RS-136A) amp.
{ RP-190-3 used with (RS-136) amp.

Turntable speed ..... 45 r.p.m.
Records used ..... RCA-Type 7-inch fine groove
Record capacity ..... 12 records
Pickup ..... Crystal (medium output)

REPLACEMENT PARTS FOR MODEL 45-EY-3

Insist on Genuine Factory Tested Parts, which are readily identified and may be purchased from Authorized Dealers.

STOCK NO.	DESCRIPTION
	AMPLIFIER ASSEMBLY
75942*	Baffle - speaker baffle board
75980*	Capacitor - electrolytic 1 section of 80 mfd. 150V. and 1 section 50 mfd. 150 volts (C5A,C5B)
73920*	Capacitor - tubular .0047 Mfd. 400 V. (C1)
	" - " Paper .01 Mfd. 400 V. C2,C4, C6
	Capacitor - tubular paper 0.1 Mfd. 400 V. C3
S-4994	Control - volume control and switch
70392	Cord - power cord and plug
74067	Crystal - replacement crystal cartridge for RP-190
75941*	Grommet - rubber grommet for motor and pickup leads
74838*	Grommet - power cord strain relay (1 set)
75940*	Selenium Rectifier
33378	Resistor - W.W. 22 ohms 2 W. used on RS136 chassis (R9)
S-4996	Resistor - 120 ohms 5 W. used in RS-136A chassis only (R9)
73237*	Resistor - W.W. 33 ohms fuse type
S-5729	Output Transformer
	SPEAKER ASSEMBLY
S-3502	Speaker - 4" x 6" PM (Replacement Speaker)
S-4206	Speaker Cone replacement for S-3502 only
	MISCELLANEOUS
75926*	Case - Maroon plastic complete with RCA Victor emblem but less bottom, lid, hinges, catch mechanism and sticker plate
75948*	Catch - Cabinet lid catch mechanism less striker plate
75954*	Cover - plastic cover bottom
74273	Decal (Victrola)
S-5661	Emblem "RCA Victor"
75697*	Grommet - rubber grommet to mount record changer
75956*	Handle - Carrying handle - upper section only
75957*	Handle - Carrying handle - bottom section only
75955*	Hinge - Cabinet lid hinge (2 Req.)
75945*	Knob - Volume Control Knob
75953*	Lid - Plastic Lid - Maroon for cabinet less decal and hinges
75958*	Link - Carrying handle link (2 Req'd)
75760*	Motor - 117 volt 60 cycle - RP-190-1
75937*	" - 85 " " " - RP-190-3
75944*	Plate - Mounting plate for carrying handle
75949*	Plate - Striker plate for catch mechanism
75950*	Spacer - metal spacer to mount record changer (3 Req'd)
75946*	Spring - Pickup arm hold down spring
75978*	Stud - tapped stud for handle mounting plate
75943*	Support - cabinet lid support
75947*	" - plastic support for lid support and power cord

NOTE: The original crystal cartridge as supplied with the instrument uses a non-replaceable needle. The replacement cartridge 74067 is the standard 45 RPM cartridge and the replacement needle is S-5529.

* INDICATES NEW STOCK ITEM.

Items not shown in the Replacement Parts List are not supplied.
All parts subject to change or withdrawal without notice.

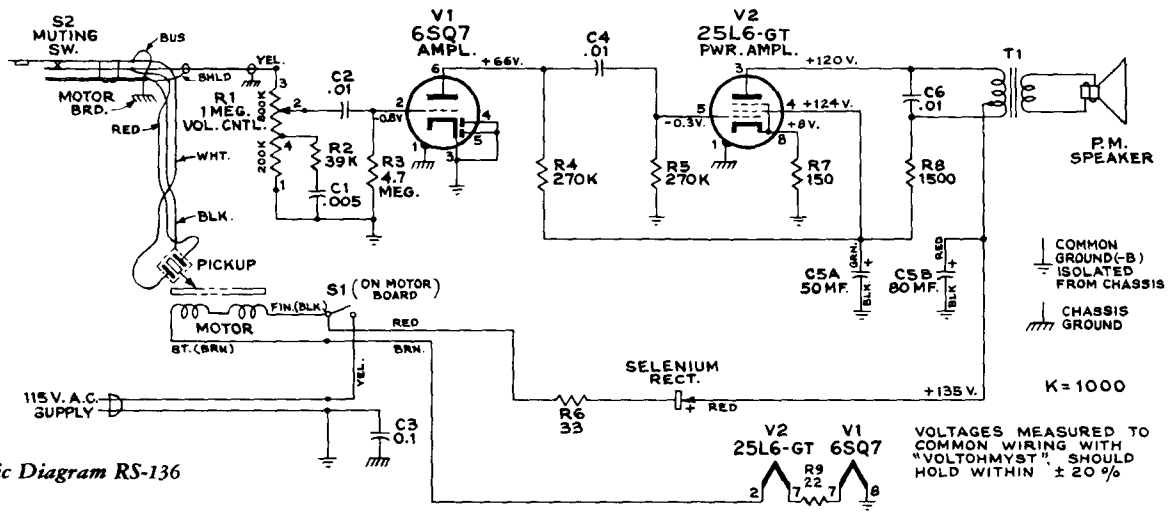

Schematic Diagram RS-136

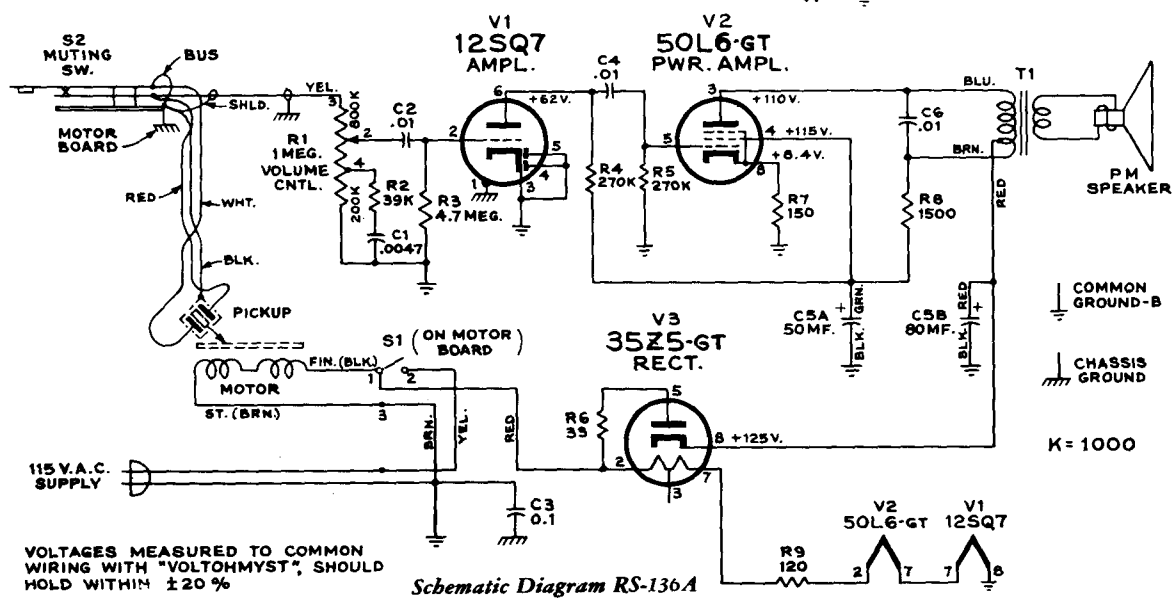

Schematic Diagram RS-136A

Pickup Height Adjustment

Adjust knurled nut (A) until the distance (during change cycle) between the top of the turntable and the stylus point is approximately 1⅛".

Pickup Landing Adjustment

Adjust the screw driver landing adjustment stud "B" so the stylus lands 2⅝" ± 1/64" from the side of the center post.

Tripping Adjustment

Adjust the eccentric tripping stud (C) until the mechanism trips when the stylus is 1 19/32" from the side of the center post.

Stop Dog Adjustment

Turn the eccentric screw (E) until the record drops to the turntable without striking the pickup arm.

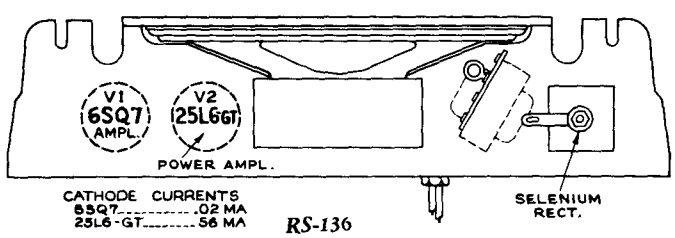

RS-136

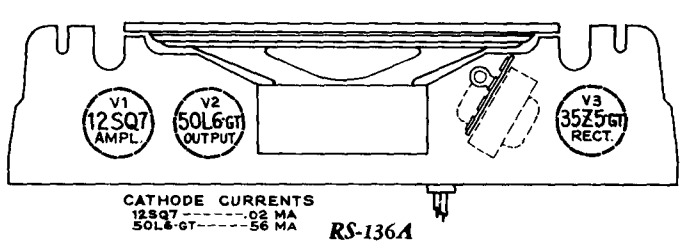

RS-136A

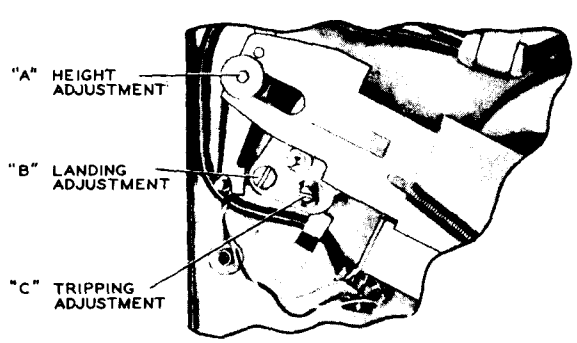

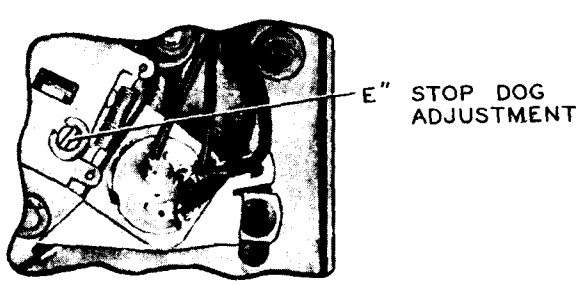

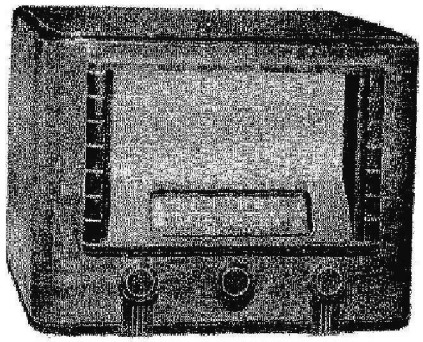

MODEL BT46

RCA VICTOR

BATTERY RECEIVER

MODEL BT46
SERVICE DATA

—1949 No. 10—

GENERAL SERVICE DIVISION
RCA VICTOR COMPANY LIMITED
MONTREAL, QUE.

Electrical and Mechanical Specifications

FREQUENCY RANGES
"Standard Broadcast" ..... 540 kcs. to 1600 kcs.
"Short Wave" ..... 5.7 mcs. to 18 mcs.
Intermediate Frequency ..... 455 kcs.

RADIOTRON COMPLEMENT
(1) Type-1R5 ..... First Detector—Oscillator
(2) Type-1T4 ..... Intermediate Amplifier
(3) Type-1S5 ..... Second-Detector, A.V.C., and A-F Amplifier
(4) Type-3Q4 ..... Power Output

POWER OUTPUT RATING
Undistorted ..... .15 watts
Maximum ..... .35 watts

LOUDSPEAKER
Type ..... 4" x 6" Elliptical P.M.
Voice-Coil Impedance ..... 3.4 Ohms at 400 Cycles

CABINET DIMENSIONS
Height ..... 9¼ inches
Width ..... 12⅞ inches
Depth ..... 8½ inches

CURRENT CONSUMPTION
"A" at 1.4 Volts ..... 250 Ma.
"B" at 90 Volts ..... 13 Ma.

Batteries Required ..... One No. 758T Eveready Pack.
OR "A"—one 1.4 Volt Air Cell or 1.5 Dry Cell. "B"—two 45 Volt heavy duty "B" Batteries.

REPLACEMENT PARTS FOR MODEL BT46

Insist on Genuine Factory Tested Parts, which are readily identified and may be purchased from Authorized Dealers

STOCK NO.	DESCRIPTION	LIST PRICE
	Chassis Assembly:	
32830	Capacitor - trimmer (dual) (C10A-C10B)	
31355	" - 15MMF Ceramic (C1)	
39628	" - 100 " Mica (C5)	
12724	" - 120 " " (C22)	
S-3237	" - 180 " " (C3)	
12952	" - 330 " " (C6)	
S-3238	" -3900 " " (C7)	
	" -.007 MFD Paper 500V. (C24)	
	" -.0025 " " 500 V. (C20-C23)	
	" -.05 " " 400 V. (C21-C11-C14-C15)	
S-3221	" Electrolytic - 10 MFd. (C25)	
S-3232	Condenser - Variable (C2-C4-C8-C9)	
S-3695	Choke - Filament choke (L9)	
S-3528	Coil Oscillator coil (SB)-L6)	
S-3233	" " " (SW) (L5)	
S-3234	" Antenna coil (L1-L2-L3-L4)	
S-3532	Indicator - Station Selector pointer	
	Resistor - 330 ohms - 1/4 watt (R12)	
	" - 10,000 " - " " (R3)	
	" - 22,000 " - " " (R5)	
	" - 39,000 " - " " (R4)	
	" -100,000 " - " " (R2)	
	" -1 Megohm" - " " (R1-R10)	

STOCK NO.	DESCRIPTION	LIST PRICE
	Chassis Assembly (Cont'd)	
	Resistor -3.3 " " " (R5-R9-R11)	
	" -10 " " " (R3-R8)	
S-3235	Switch - Range Switch (S1)	
S-3533	Shaft - Drive shaft	
36500	Socket - Tube socket	
S-3526	Transformer - 1st I.F. (L7-L8-C12-C13)	
S-3527	" 2nd I.F. (L10-L11-C16-C17-C18..C19)	
S-3530	Volume control - 1 meg. (R7-S2)	
	Speaker Assembly 4x6 P.M.	
35849	Dust Cap (Pkg. 3)	
S-3569	Cone - Cone & Voice coil ass'y (L14)	
S-3531	Output Transformer (L12-L13)	
	Miscellaneous Assembly	
S-4313	Cord - Drive cord	
S-3534	Cable - Battery cable	
S-3236	Dial - Dial scale	
35914	Knob	
35775	"	
12827	Plug "A" battery cable plug	
S-2398	" "B" battery cable plug	

All Prices and Parts are subject to change or withdrawal without notice.

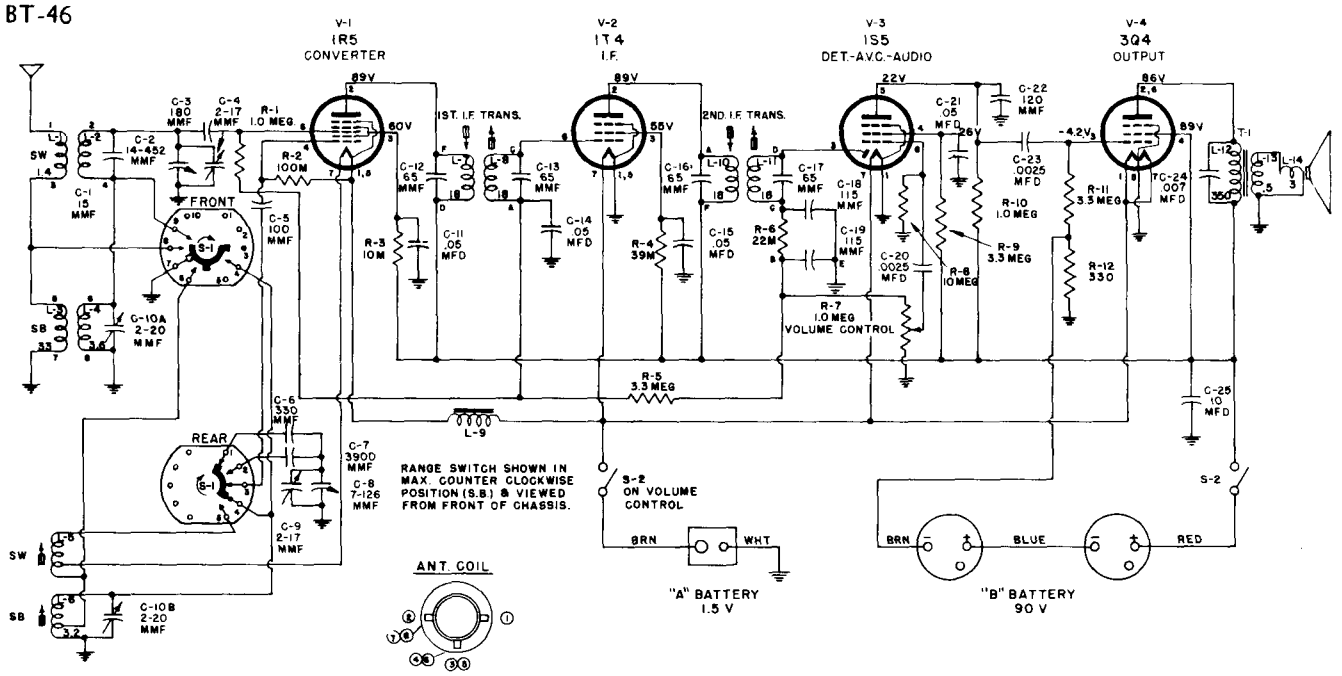

FIG. 1 SCHEMATIC DIAGRAM

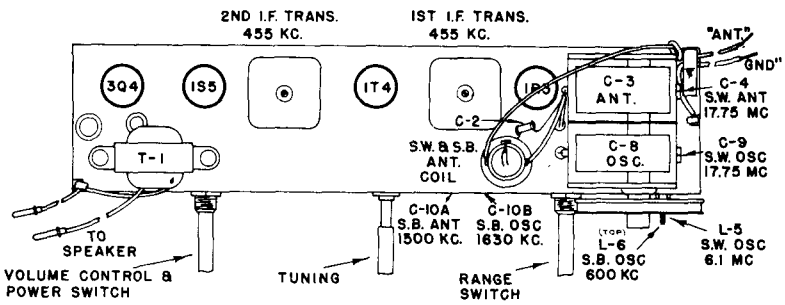

FIG. 2 CHASSIS LAYOUT & ALIGNMENT ADJUSTMENT

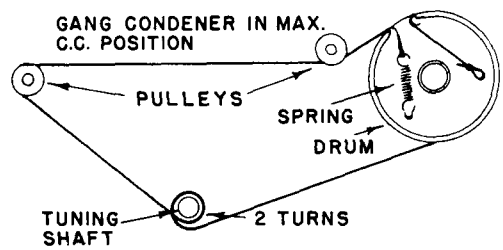

FIG. 3 DIAL CORD STRINGING

Alignment Procedure

Order of Alignment		TEST OSCILLATOR				RECEIVER				
		Connect "HI" Side to	Connect "LO" Side to	Dummy Antenna	Frequency Setting	Range Selector	Dial Setting	Circuit to Adjust	Adjustment Symbols	Notes
I.F. ALIGN.	1	1R5 Grid Pin #6	Gnd	.1 Mfd	455 Kc	S.B.	"HI" End	1st & 2nd I.F.	L-7, L-8, L-10, L-11	Max. Out.
S.B. ALIGNMENT	2	"Ant". Lead	Gnd	300 Ohm	6.1 Mc	S.W.	6.1 Mc	Osc.	L-5 (Rock In)	Max. Out.
	3	Same	Same	Same	17.75 Mc	Same	17.75 Mc	Osc.	C-9	Same
	4	Same	Same	Same	Same	Same	Same	Ant.	C-4	Same
	5	Repeat Steps 2, 3 and 4.								
S.W. ALIGNMENT	6	"Ant" Lead	Gnd	220 Mmf	600 Kc	S.B.	600 Kc	Osc.	L-6	Max. Out.
	7	Same	Gnd	Same	1630 Kc	Same	1630 Kc	Osc.	C-10B	Same
	8	Same	Same	Same	1500 Kc	Same	1500 Kc	Ant.	C-10A	Same
	9	Repeat Steps 6, 7 and 8.								

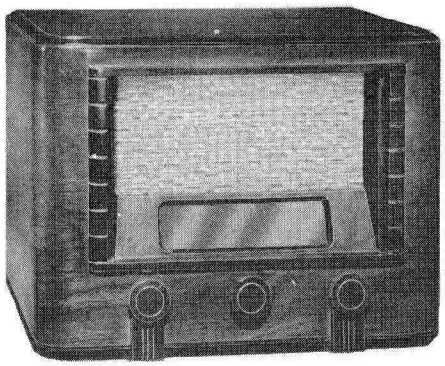

MODEL BT48

RCA VICTOR

"HIS MASTER'S VOICE"

BATTERY RECEIVER

MODEL BT48

SERVICE DATA

—1949 No. 22—

GENERAL SERVICE DIVISION
RCA VICTOR COMPANY LIMITED
MONTREAL, QUE.

Electrical and Mechanical Specifications

FREQUENCY RANGES
"Standard Broadcast" ----------540 kcs. to 1600 kcs.
"Short Wave Marine" ----------1600 kcs. to 2900 kcs.
"Short Wave" ----------5.7 mcs. to 18 mcs.
Intermediate Frequency ----------455 kcs.

RADIOTRON COMPLEMENT
(1) Type-1R5 ----------First Detector—Oscillator
(2) Type-1T4 ----------Intermediate Amplifier
(3) Type-1S5 ----------Second-Detector, A.V.C., and A-F Amplifier
(4) Type-3Q4 ----------Power Output

POWER OUTPUT RATING
Undistorted ---------- .15 watts
Maximum ---------- .35 watts

LOUDSPEAKER
Type ----------4" x 6" Elliptical P.M.
Voice-Coil Impedance ----------3.4 Ohms at 400 Cycles

CABINET DIMENSIONS
Height ---------- 9¼ inches
Width ----------12⅞ inches
Depth ---------- 8½ inches

CURRENT CONSUMPTION
"A" at 1.4 Volts----------250 Ma.
"B" at 90 Volts ---------- 13 Ma.

Batteries Required ----------One No. 758T Eveready Pack.
OR "A"—one 1.4 Volt Air Cell or 1.5 Dry Cell. "B"—two 45 Volt heavy duty "B" Batteries.

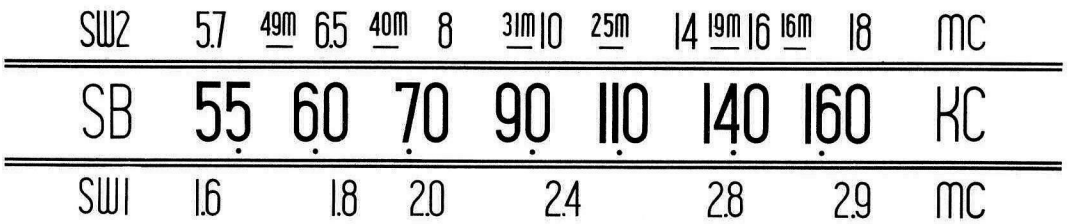

The Dial Scale drawing shown is a full size reproduction. It can be used as a reference in alignment procedure.

Fig. 1—Dial Scale

REPLACEMENT PARTS FOR MODEL BT48

Insist on Genuine Factory Tested Parts, which are readily identified and may be purchased from Authorized Dealers.

STOCK NO.	DESCRIPTION	LIST PRICE
	Chassis Assembly	
S-5420	Capacitor - trimmer assembly	
39608	" - mica 15 MMF.	
S-5418	" - ceramic 20 MMF.	
39628	" - " 100 "	
12724	" - mica 120 "	
S-5237	" - " 180 "	
S-5419	" - " 390 "	
S-5238	" - " 3,900 "	
	" - paper .007 Mfd.	
	" - " .0025 "	
	" - " .05 "	
S-3221	" - electrolytic 10 Mfd.	
S-5232	Condenser - variable	
S-3695	Choke - filament choke	
S-5415	Coil - antenna coil	
S-5233	Coil - S.W. oscillator coil	
S-5416	Coil - "F" oscillator coil	
S-3528	Coil - Oscillator coil "SB"	
S-3532	Indicator - station selector pointer	
	Resistor - 330 ohms ¼ watt	
	" - 10,000 ohms ¼ watt	
	" - 22,000 " " "	
	" - 39,000 " " "	
	" -100,000 " " "	

STOCK NO.	DESCRIPTION	LIST PRICE
	Chassis Assembly (Cont'd)	
	Resistor - 1 Megohm ¼ watt	
	" - 3.3 " " "	
	" - 10 " " "	
S-3533	Shaft - drive shaft	
S-5414	Switch - range switch	
S-3526	Transformer - 1st I.F.	
S-3527	" - 2nd I.F.	
S-3530	Volume Control - 1 Meg.	
	Speaker Assembly	
S-3569	Cone - cone & voice assembly	
S-3531	Output transformer	
	Miscellaneous Assemblies	
S-4313	Cord - drive cord (Standard)	
S-5417	Decals	
S-3534	Cable - battery cable	
S-5421	Dial Scale	
35814	Knob	
35775	"	
12827	Plug "A" battery cable plug	
S-2398	" "B" " " "	

Only items listed under stock numbers are available as Replacement Parts.

All parts subject to change or withdrawal without notice.

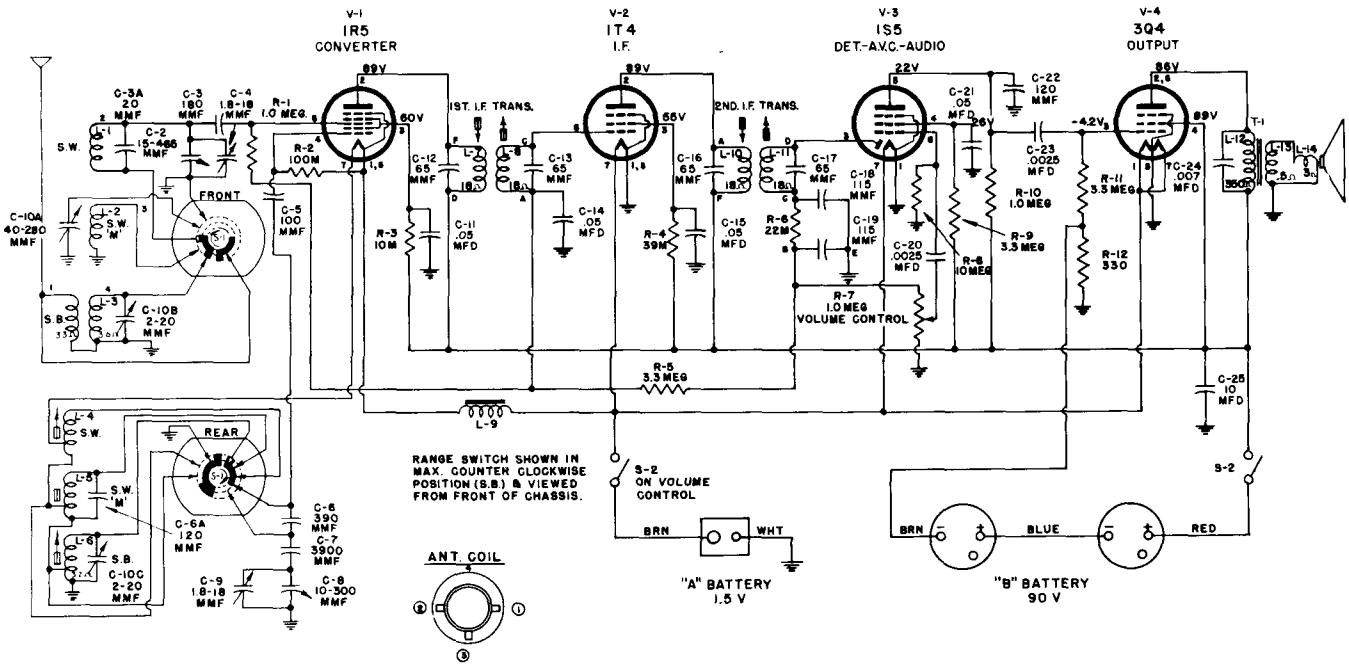

FIG. 2 — SCHEMATIC DIAGRAM

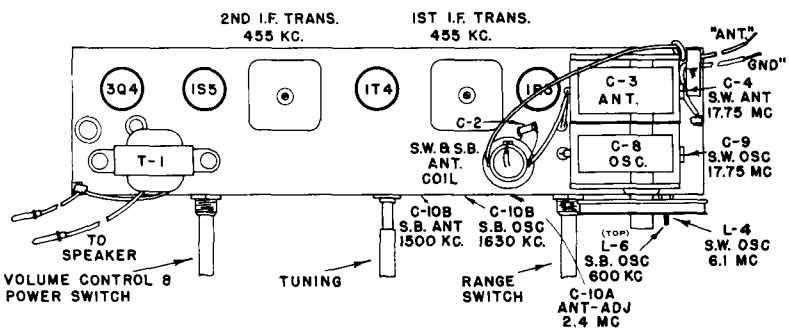

Fig. 3—Chassis Layout & Alignment Adj

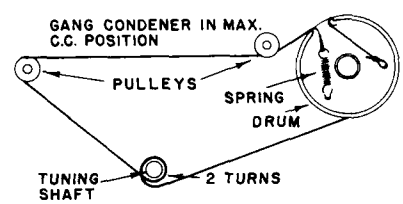

Fig. 4—Dial Cord Stringing

Alignment Chart

Order of Alignment		TEST OSCILLATOR				RECEIVER				
		Connect "HI" Side to	Connect "LO" Side to	Dummy Antenna	Frequency Setting	Range Selector	Dial Setting	Circuit to Adjust	Adjustment Symbols	Notes
I.F. ALIGN.	1	1R5 Grid Pin #6	Gnd	.1 Mfd	455 Kc	S.B.	"HI" End	1st & 2nd I.F.	L-7, L-8, L-10, L-11	Max. Out.
S.W. ALIGNMENT	2	"Ant." Lead	Gnd	300 Ohm	6.1 Mc	S.W.	6.1 Mc	Osc.	L-4 (Rock in)	Max. Out.
	3	Same	Same	Same	17.75 Mc	Same	17.75 Mc	Osc.	C-9	Same
	4	Same	Same	Same	Same	Same	Same	Ant.	C-4	Same
	5	Repeat Steps 2, 3 and 4.								
S.W. MARINE ALIGNMENT	6	"Ant." Lead	Gnd	300 Ohm	2.44 Mc	S.W. Marine	2.44 Mc	Ant.	C-10A	Max. Out.
S.B. ALIGNMENT	7	"Ant." Lead	Gnd	220 Mmf	600 Kc	S.B.	600 Kc	Osc.	L-6	Max. Out.
	8	Same	Gnd	Same	1630 Kc	Same	1630 Kc	Osc.	C-10C	Same
	9	Same	Same	Same	1500 Kc	Same	1500 Kc	Ant.	C-10B	Same
	10	Repeat Steps 7, 8 and 9.								

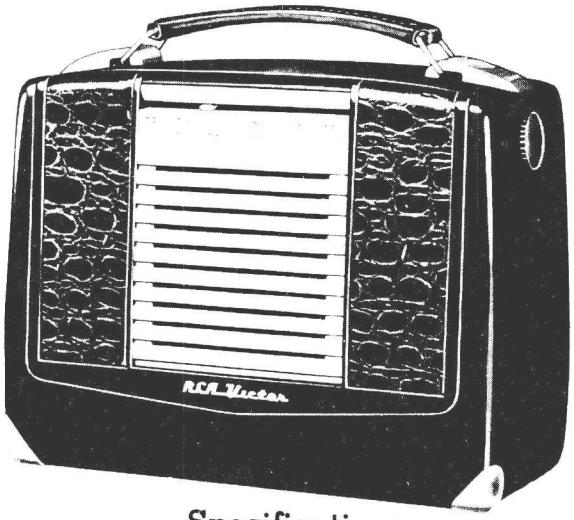

RCA VICTOR

AC-DC-Battery Portable Receiver

MODEL BX57 SERVICE DATA

— 1950 No. 11 —

HOME INSTRUMENT SERVICE DIVISION
RCA VICTOR COMPANY, LTD.
MONTREAL, CANADA

Specifications

Tuning Range ..... 540-1600 kc.
Intermediate Frequency ..... 455 kc.

Tube Complement
(1) RCA 1R5 ..... Converter
(2) RCA 1U4 ..... I. F. Amplifier
(3) RCA 1U5 ..... Det.—A.V.C.—A. F. Amp.
(4) RCA 3V4 ..... Output
A selenium rectifier is used

Power Supply Rating
Power Line Operation
115 volts, d. c. or 50 to 60 cycles a. c. ..... 18 watts
or
Battery Operated ..... VS 050 Battery
(Average life—100 hrs. intermittent service)

Loudspeaker (92577-3 or 971495-2)
Size and type ..... 4 in. P.M. dynamic
Voice coil impedance ..... 3.2 ohms at 400 cycles

Tuning Drive Ratio ..... 8:1 (4 turns of knob)

Power Output
Undistorted—170 milliwatts Maximum—350 milliwatts
(Output is slightly lower on battery operation)

Cabinet Dimensions
Height 8¼ in. Width 10¾ in. Depth 5 in.

Weight (Approx.)
5 lb. less battery 8 lb. 2 oz. with battery

AC-DC Operation

A power cord is stored inside the cabinet. To open the cabinet, pull backwards on the top of the cabinet back. It is secured by means of two spring clips and catches on the inside of the cabinet. Remove the plug of the power cord from its socket on the chassis and insert the plug into a convenient electrical power outlet. A notch in the right side of the cabinet allows the back to be closed with the cord passing through.

Notes: 1. Maximum performance is obtained with the battery in place. Receiver sensitivity will be lowered if the battery is not in place during AC-DC operation since the battery affects the loop inductance.

2. If reception is not obtained on DC, reverse plug in power outlet. On AC operation, reversal of the plug may reduce hum.

Battery Operation

Replace the power cord plug in the socket provided on the back of the chassis. Coil up the power cord and place it alongside of the battery. Make certain that it will not interfere with the tuning condenser.

Note: Make certain that the plug is fully inserted (base of plug touching chassis) to assure proper operation of the Batt-Line switch.

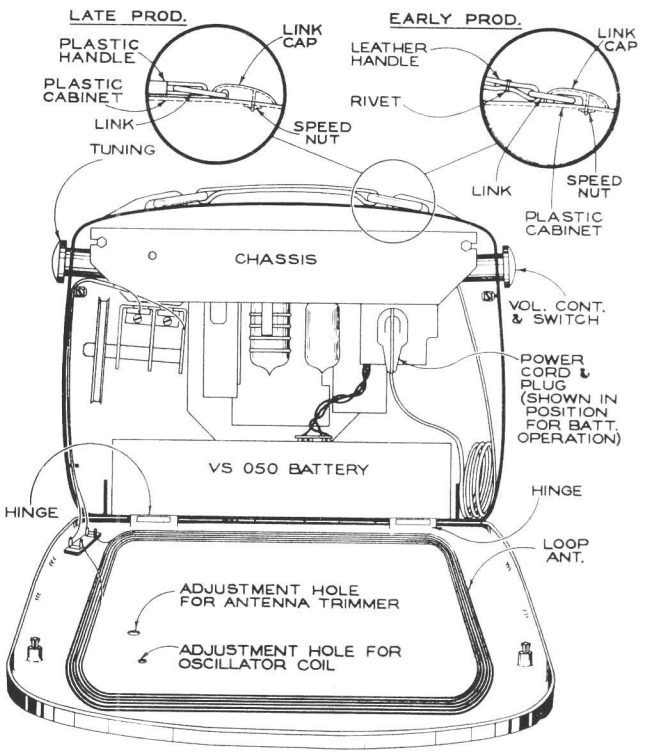

To Remove Carrying Handle

Early Type:

1. Remove rivets from handle (if present).
2. Turn link and slip out of handle and cabinet.

Late Type:

1. Remove speed nuts holding carrying handle link caps.
2. Remove link caps.
3. Turn link and slip out of handle and cabinet.

Cabinet Back and Hinges

The cabinet back and hinges may be readily detached from the cabinet. See back page for detailed instructions on their removal.

Alignment Procedure

Signal Generator—For all alignment operations, connect the low side of the signal generator to the receiver chassis and keep the output as low as possible to avoid AVC action.

Battery operation of the receiver is preferable during alignment; on a. c. operation an isolation transformer (117v./117v.) may be necessary for the receiver if the signal generator is also a. c. operated.

Note: Battery must be in place for ant. alignment (step 6).

Dial Pointer Position.—With the tuning condenser fully meshed the center of the dial pointer should be in line with the score mark on the chassis.

Alignment Tabulation

Step	Connect high side of signal generator to—	Signal generator output	Dial pointer setting	Adjust for maximum output—
1	Disconnect loop — remove chassis — remove bottom plate, connect a 10,000 ohm resistor from C1-1 stator terminal to tuning condenser frame.			
2	Grid of 1U4 (pin No. 6) thru .01 mf. capacitor	455 kc	Quiet point near 1600 kc	T2 (top & bottom) 2nd. I-F trans.
3	Stator term. of C1-1 thru .01 mf. capacitor			T1 (top & bottom) 1st. I-F trans.
4	Remove the 10,000 ohm resistor. Replace bottom cover and install chassis in cabinet. Re-connect loop.			
5	Short wire placed near receiver (for radiated signal)	1620 kc	Tuning condenser fully open	C1-2 trimmer (osc.)
6		1400 kc	1400 kc signal	†C1-1 trimmer (ant.)
7		600 kc	600 kc signal	†L1 (osc.) rock gang
8	Repeat steps 5 and 6.			

† With back closed. Trimmer is accessible thru hole in back.

NOTE:

The magnetite cores of T2 and T1 may not have visible adjusting screws. The cores have screwdriver slots to permit adjustment (use non-metallic screwdriver).

Critical Lead Dress

1. Dress antenna loop leads away from adjusting screws on tuning condenser.
2. Dress all capacitors against chassis base.
3. Dress oscillator coil away from chassis and bottom cover.
4. Dress output transformer primary leads against chassis.
5. Dress all leads and components away from selenium rectifier.
6. Dress the 4 mmf. capacitor (C15) down against the .003 mf. capacitor (C14).
7. Capacitor C15 must be connected to the plate terminal of the 1U4 socket with as short lead as possible.
8. Dress loop antenna leads into recesses provided in the side of the cabinet. Leave slack at hinged edge of cabinet.

Note: This instrument is designed to be operated with a battery in position inside the cabinet. Reception will be below normal unless the battery is in its normal location.

The position of the battery pack affects the loop inductance. Therefore, when the battery is removed, the loop inductance will change (increase) and the sensitivity will be slightly worse because of improper electrical tracking of the loop circuit with the heterodyne oscillator of the receiver.

CAUTION.—

Do not remove any tubes from the chassis with the set operating and the plug connected to the power line. Damage to tubes may result.

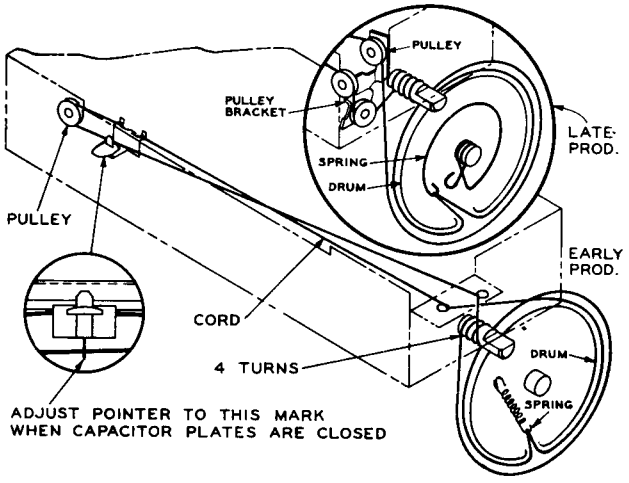

Dial Indicator and Drive Mechanism

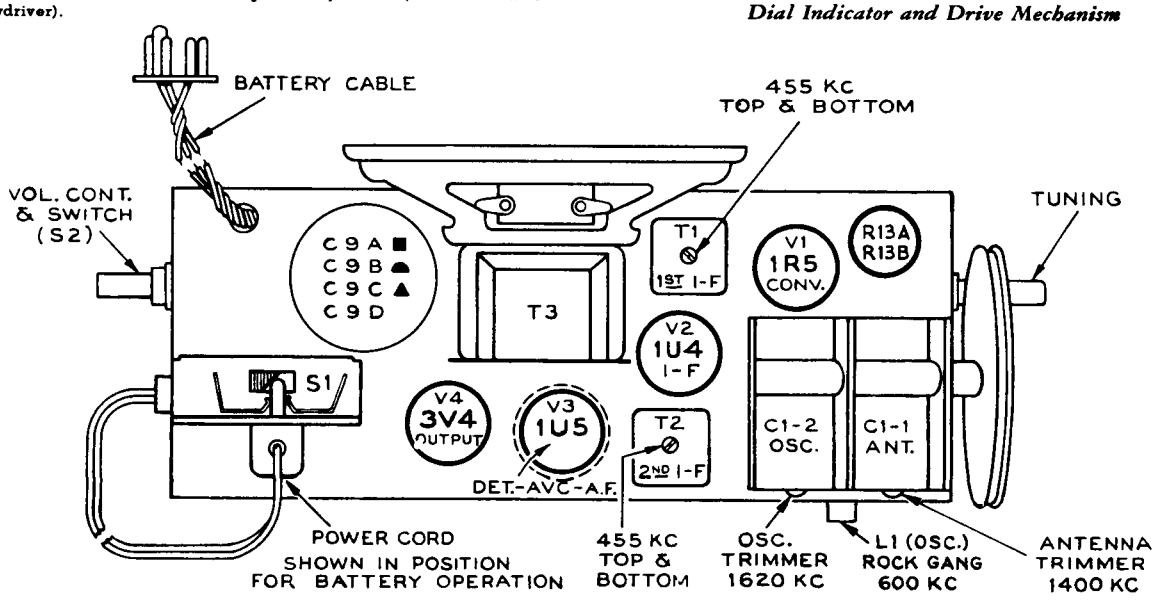

Tube and Trimmer Locations

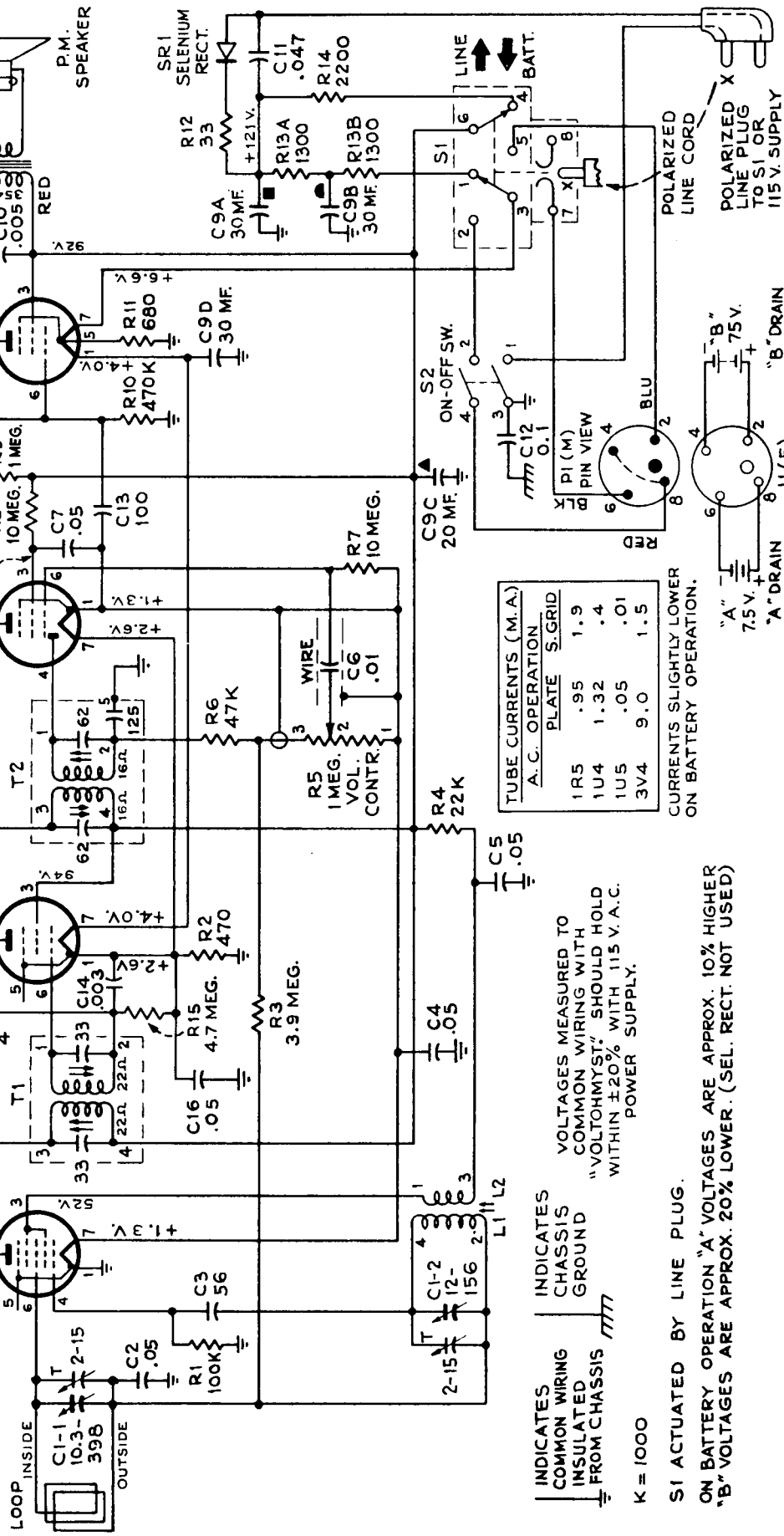

SCHEMATIC DIAGRAM

Substitution of Capacitor:

In some instruments section 9D of the four section electrolytic capacitor C9A, C9B, C9C, C9D is not used. A separate 30 mf. capacitor is used instead. This was done because the electrolytic capacitors supplied by certain vendors had common coupling between sections which resulted in excessive hum.

Please note that the separate 30 mf. capacitor is used in place of and not in parallel with the 30 mf. section of the multiple capacitor.

The replacement parts stock of the four section capacitor (Stock No. 74774) has been found to be satisfactory and substitution of section C9D should not be necessary.

Lead Dress:

Capacitor C11 (.047 mf.) must be dressed away from the metal chassis and in such position that inserting the chassis into the case will not change its position.

The side of C11 which may short to chassis is the side which connects directly to the selenium rectifier. If this side contacts the chassis it will place the chassis at power line potential.

Replacement Parts

STOCK No.	DESCRIPTION
	CHASSIS ASSEMBLIES RC-1088A, RC-1088C
76404	Bracket—Drive cord pulley bracket including two pulleys (for RC-1088C)
75149	Capacitor—Variable tuning capacitor....C1-1, C1-2
73153	Capacitor—Ceramic, 4 mmf.....C15
39622	Capacitor—Mica, 56 mmf.....C3
39628	Capacitor—Mica, 100 mmf.....C13
74774	Capacitor—Electrolytic, comprising 2 sections of 30 mfd., 150 volts, 1 section of 20 mfd., 150 volts and 1 section of 30 mfd., 25 volts, C9A, C9B, C9C, C9D
72315	Capacitor—Tubular, paper, .002 mfd., 200 volts..C8
73961	Capacitor—Tubular, paper, .003 mfd., 200 volts.C14
73920	Capacitor—Tubular, paper, .005 mfd., 400 volts.C10
73561	Capacitor—Tubular, paper, .01 mfd., 400 volts..C6
75071	Capacitor—Tubular, moulded paper, .047 mfd., 400 volts.....C11
73553	Capacitor—Tubular, paper, .05 mfd., 400 volts, C2, C4, C5, C7, C16
70617	Capacitor—Tubular, paper, 0.1 mfd., 400 volts..C12
73935	Clip—Mounting clip for I.F. transformer
74405	Coil—Oscillator coil.....L1, L2
73275	Connector—5 contact male connector for battery cable
73125	Control—Volume control and power switch..R5, S2
70022	Cord—Power cord and plug
S-4313	Cord—Drive cord (approx. 40" overall length req'd)
72283	Grommet—Rubber grommet to mount tuning capacitor
74838	Grommet—Power cord strain relief grommet (1 set)
74776	Indicator—Station selector indicator
18469	Plate—Mounting plate for electrolytic capacitor
72602	Pulley—Drive cord pulley
74322	Rectifier—Selenium rectifier.....SR1
73237	Resistor—Wire wound (fuse type) 33 ohms.....R12
76006	Resistor—Wire wound, 2600 ohms tapped at 1300 ohms 6 watts.....R13
	Resistors—Fixed, composition:-
	470 ohms, ±20%, ½ watt.....R2
	680 ohms, ±20%, ½ watt.....R11
	2200 ohms, ±10%, ½ watt.....R14
	22,000 ohms, ±20%, ½ watt.....R2
	47,000 ohms, ±20%, ½ watt.....R6
	100,000 ohms, ±20%, ½ watt.....R1
	470,000 ohms, ±20%, ½ watt.....R10
	1 megohm, ±20%, ½ watt.....R9
	3.9 megohm, ±10%, ½ watt.....R3
	4.7 megohm, ±20%, ½ watt.....R15
	10 megohm, ±20%, ½ watt.....R7, R8
74773	Shaft—Tuning knob shaft for RC-1088A
76403	Shaft—Tuning knob shaft for RC-1088C
73103	Shield—Tube shield for 1U5 tube
73117	Socket—Tube socket, miniature
74038	Spring—Drive cord tension spring—coil type
76368	Spring—Drive cord tension spring—semi-circular type
71039	Switch—"Line-Battery" change switch.....S1
73129	Transformer—First I.F. transformer.....T1
73130	Transformer—Second I.F. transformer.....T2
71047	Transformer—Output transformer.....T3
33726	Washer—"C" washer for tuning knob shaft
	SPEAKER ASSEMBLIES 92577-3
74165	Speaker—4" P.M. speaker (92577-3) complete with cone and voice coil—for RC-1088A
76402	Speaker—4" P.M. speaker (971495-2) complete with cone and voice coil—for RC-1088C
76401	Spacer—Spacers(2) and screws(2) to mount 971495-2 speaker on RC-1088A (not required for RC-1088C)
	MISCELLANEOUS
75080	Back—Cabinet back complete with loop
74787	Board—Terminal board—2 contact
Y2227	Cabinet—Cabinet front including corners and link caps—less dial and plate
75156	Cap—Carrying handle link cap (2 required)—early type with wide slot for link
76405	Cap—Carrying handle link cap (2 required)—late type with narrow slot for links
74339	Catch—Cabinet back catch (part of cabinet front)
74734	Clip—Spring clip for knob
74792	Clip—Striking clip for catch (part of cabinet back) (2 required)
75153	Cover—Cabinet corner cover—L.H.
75154	Cover—Cabinet corner cover—R.H.
75157	Dial—Metal dial scale and bezel
74782	Emblem—"RCA Victor" emblem
75150	Handle—Carrying handle (early type—leather)
76280	Handle—Carrying handle (late type—plastic)
74790	Hinge—Cabinet hinge (2 required)
74781	Knob—Tuning or volume control and power switch knob
75151	Link—Link for carrying handle—1 5/16" length (early type) (2 required)
76281	Link—Link for carrying handle—1 3/16" length (late type) (2 required)
75152	Loop—Antenna loop winding
74788	Nut—Speed nut to mount terminal board
73203	Nut—Speed nut to fasten dial, corner covers, decorative plate or link caps
74783	Plate—Decorative plate (satin finish) for cabinet (above dial)
76279	Plate—Reinforcing plate for mounting chassis in cabinet (2 required)
75448	Rivet—Bevel pointed rivet for early type leather handle (2 required)
75435	Screen—Crinoline screen for speaker grille
74301	Screw—No. 8-32 x 3/8" pan head cross recessed screw for chassis mounting (2 required)
74791	Screw—No. 4 x 5/16" pan head cross recessed screw to fasten catch to cabinet front.

APPLY TO YOUR RCA DISTRIBUTOR FOR PRICES OF REPLACEMENT PARTS

Change in Resistor:

The 2600 ohm 6 watt resistor (R13) now being used in Model **BX57** is of improved design. The original resistor was a ceramic type and the type now being used is a flat armored type. When the new type is used to replace the original type, it is necessary to drill a .120" diameter hole in the front apron of the chassis to accommodate a self-tapping screw for mounting purposes.

To Remove Cabinet Back

Disconnect the loop antenna leads. With the back fully open, grip the cabinet as illustrated. Insert a screwdriver under one hinge and pry the center of the hinge out of the opening in the cabinet while maintaining pressure on the back with the fingers and on the cabinet with the thumb. Repeat this procedure with the other hinge. Pull the back straight to the rear using both hands.

To Remove Hinges

Remove back from cabinet as described above. Spread the hinge apart to remove it from the cabinet back.

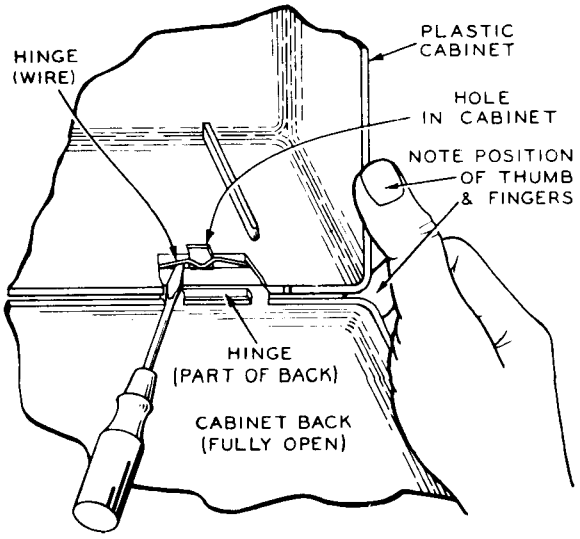

Removal of Cabinet Back

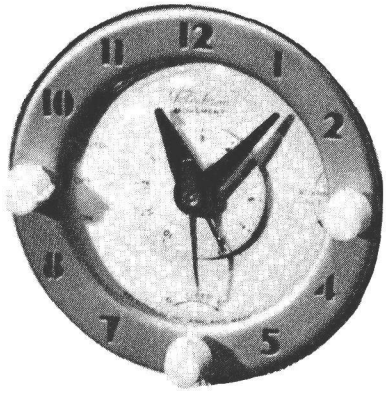

RCA VICTOR

Model C-57 Series G-5, G-10, G41 Clock Timers SERVICE DATA

—1950 No. 12—

HEAD OFFICE SERVICE DEPARTMENT
RCA VICTOR COMPANY, LTD
MONTREAL, QUE.

CLOCK-TIMER CONTROLS

1. The RADIO Control knob has three positions:—
   (1) AUTO—Connects power to radio through clock timing mechanism.
   (2) OFF—Disconnects power to radio.
   (3) ON—Connects power directly to radio.

2. The ALARM Control knob when pulled out, permits rotation of the small central disc to pre-set the time at which the radio is turned on automatically. The alarm buzzer, which is set when the knob is out, operates 10 minutes after the radio is turned on.
When the knob is pushed in, the alarm presetting mechanism is disengaged and the alarm buzzer is silenced.

3. The LULLABY SWITCH knob can be set to turn off the radio automatically after an interval of from zero (0) to sixty (60) minutes has elapsed.

4. The TIME-SET Control at the back of the receiver, directly behind the clock, is used to set the clock hands to the correct time.

CLOCK-TIMER OPERATION

Operation of the clock-timer may be most readily illustrated by means of the following example. Assume that it is now 6.30 p.m. and that it is desired to have the radio turn on automatically at 9 p.m.

1. Pull out the ALARM Control knob and rotate counter-clockwise until "9" on the small central disc falls under the narrow pointer which is opposite (but attached to) the clock hour hand. Push the knob in again unless buzzer action is required.

2. Set RADIO control to AUTO. The radio will be turned on automatically at 9 p.m.

After listening to the radio until 10.30 p.m. assume that it is desired to re-set the clock-timer to turn the radio on again at 7 a.m.

3. Pull out the ALARM control knob and rotate counter-clockwise until "7" on the small central disc falls under the narrow pointer which is opposite (but attached to) the clock hour hand.

4. Set RADIO control to OFF, then back to AUTO. The radio is now off and will be turned on again at 7 a.m. The alarm buzzer will operate 10 minutes later.

The clock timing mechanism may also be set to operate the alarm buzzer without simultaneously turning on the radio. Proceed as in section 3, then set RADIO control to OFF. The alarm will operate 10 minutes after the time set on the small central disc.

If it is desired to listen to the radio while going to sleep, the LULLABY SWITCH may be set to turn off the radio automatically after an interval of from zero (0) to sixty (60) minutes has elapsed, even though the RADIO control is set at OFF or to AUTO. It will not turn off the radio if the RADIO control is set at ON. The LULLABY SWITCH knob pointer should be set between zero (0) and sixty (60) in accordance with the number of minutes operation desired.

CONTACT ADJUSTMENT

1. Set switch to "alarm" position so that cam follower rests on timing cam. Contacts should be adjusted to .017" min. gap.

2. With switch in "OFF" position contacts should remain open as in (1) above and there should be clearance between the cam follower and the cam.

3. With switch in "ON" position, the contacts should be closed.

4. Set switch to "Alarm" position, turn alarm set knob until cam follower drops into state of timing cam. The contacts should now be closed.

5. Check for proper contact pressure by depressing lower contact strip, using a small pointed tool. If upper contact strip follows the lower, a noticeable amount before the contacts separate, the pressure is correct.

6. To check on the closing of contacts, connect a small lamp in series with the switch assembly when testing.

TIMING

1. Set the minute and hour hands to 12 o'clock.

2. Set the timer dial so that the 12 o'clock mark lines up with small line on the dial. In this position the indicator on the hour hand should also line up with the line on the dial.

3. Adjust the timer for contact closure at 6.55 o'clock when dial is set for alarm to operate at 7:00 o'clock. On repeat tests, the contacts should close at 6.55 plus or minus 3 minutes. At all other settings, the contacts should close within 12 minutes ahead or 2 minutes after the time for which dial is set.

VIBRATOR ADJUSTMENT

1. Vibrator should start buzzing 10 minutes plus or minus 5 minutes after contacts close.

2. When the vibrator is in "Shut-off" position the shut-off spring should lift the vibrator sufficiently above the cam, so that the cam will not contact vibrator in any position.

3. Adjust vibrator for maximum sound.

GENERAL

1. The alarm set knob should be sufficiently tight on the shaft to permit setting the alarm disc in a clockwise or counter-clockwise direction but should loosen if the cam is turned against the vibrator.

2. The switch knob should turn freely.

3. The alarm disc should not rub against the dial in any position. Prongs must be fully seated in the alarm set groove.

4. This clock-timer will operate satisfactorily only on the supply voltage and frequency as stamped on the name plate of the receiver and the clock.

5. If clock loses time or hands do not rotate, check clearance of time setting shaft from case back. This shaft must be allowed to rotate freely while clock is in operation.

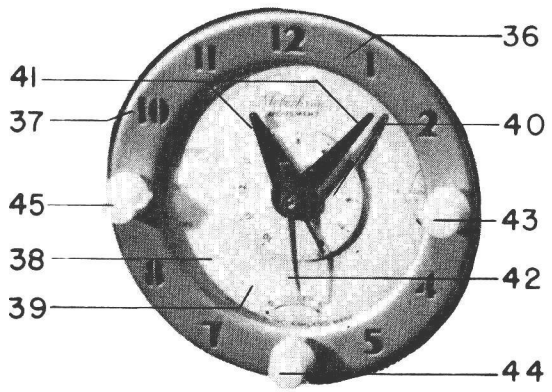

Fig. 1 Front View of Clock
(See Parts List for Symbol No.)

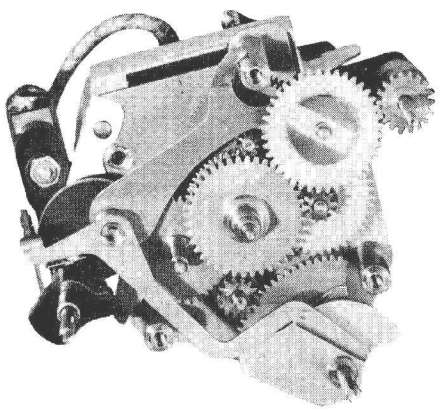

Fig. 2 Front View of Clock, Front Plate Removed

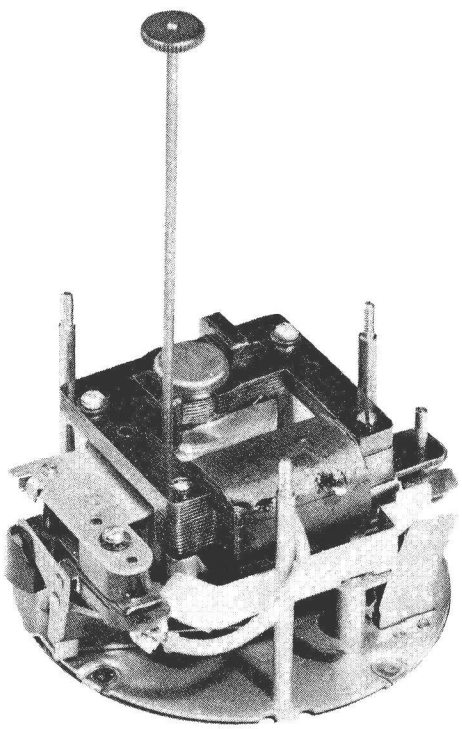

Fig. 3 Back View of Clock

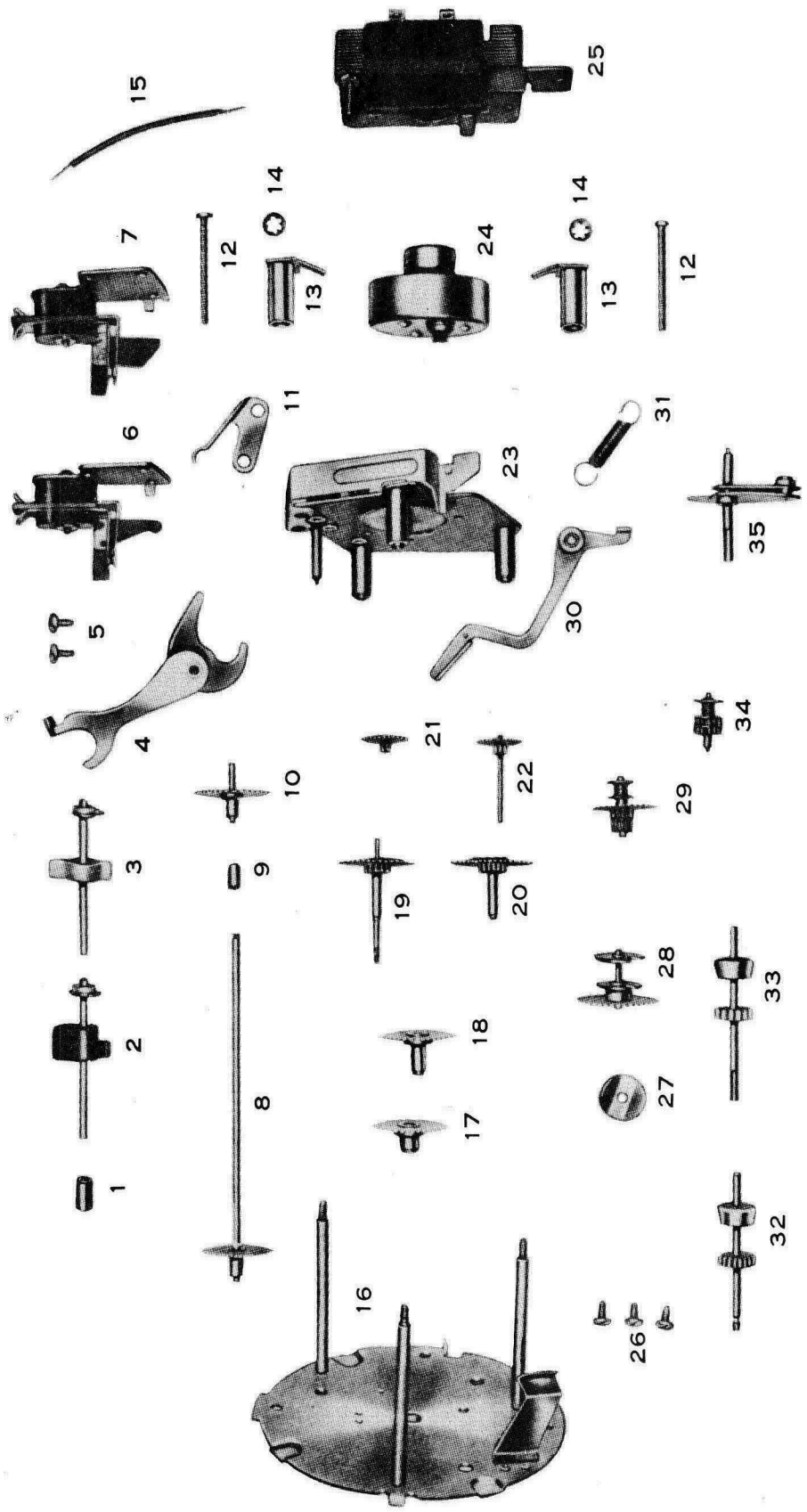

EXPLODED MOVEMENT VIEW C57 TIMER
FIG. 4
(See Parts List For Symbol No.)

REPLACEMENT PARTS LIST—C-57—Series G5, G10, G41 CLOCK TIMERS

SYMBOL NO.	STOCK NO.	PARTS DESCRIPTION
1	S-5808	Switch Shaft Spacer
2	S-5807	" " with a black bakelite cam.
3	S-6429	" " " " white nylon cam.
4	S-5806	" Lever
5	S-5801	" Contact Screws
6	S-5804	" " for (S-5807)
7	S-6430	" " " (S-6429)
8	S-5809	Time Set Shaft
8	S-6431	" " "
9	S-5810	" " " Spacer
10	S-6432	" " Idler Gear
11	S-5805	Index Spring
12	S-6124	Field Screw
13	S-5802	Spreader Post
14		#1204 Lockwasher
15		Wire lead
16	S-5795	Front Plate Assembly for (S-5807)
16	S-6125	" " " " (S-6429)
17	S-5788	Alarm Set Sleeve
18	S-5796	Hour Hand Sleeve
19	S-6433	Minute Hand Shaft
20	S-5798	" " Sleeve
21	S-6434	Sweep Second Gear
22	S-5803	" " Hand Shaft
23	S-5790	Base Plate Assembly
24	S-5799	Rotor Unit (60 cycle)
24	S-5831	" " (50 cycle)
24	S-5800	" " (25 cycle)
25	S-6121	Field and Coil (60 cycle)
25	S-6122	" " " (50 cycle)
25	S-6123	" " " (25 cycle)
26	S-5801	Front Plate Screws
27	S-6435	Cam. Shaft Washer
28	S-5791	" "
29	S-5797	Intermediate Shaft
30	S-6127	Sleep Switch Lever
31	S-6126	Booster Spring
32	S-5789	Alarm Shaft (Threaded)
33	S-6120	" " (Slotted)
34	S-6128	Sleep Switch Friction
35	S-6104	" " Shaft
36	S-5778	Bezel - Numeral Gold
36	S-6436	" " "
37	S-5779	" Color Ring Maroon
38	S-5780	Crystal 2 9/16" round
39	S-5781	Dial
39	S-6437	"
40	S-5782	Alarm Disc.
40	S-6438	" "
41	S-5783	Hour and Minute - Maroon
41	S-6439	" " " - Luminous
42	S-5784	Sweep Second - Gold
43	S-5785	Alarm Set - Ivory (Threaded)
43	S-5786	" " " (Slotted)
44	S-5786	Sleep Switch - Ivory
45	S-5786	Radio Switch - Ivory
46	S-5786	Time Set - Bronze
	S-5993	Complete Clock-Timer (60 cycle)
	S-5995	" " " (25 cycle)
	S-6427	" " " (60 cycle)
	S-6428	" " " (25 cycle)

Only items listed under stock numbers are available as Replacement Parts.

All parts subject to change or withdrawal without notice.



RCA VICTOR

AC-DC BATTERY PORTABLE RECEIVER

Model BP61

SERVICE DATA

— 1952 No. 10 —

HEAD OFFICE SERVICE DEPARTMENT
RCA VICTOR COMPANY, LTD
MONTREAL, QUE.

Specifications

Tuning Range ..... 540-1,600 kc
Intermediate Frequency ..... 455 kc
Power Supply Rating
Power Line Operation
115 volts, d. c. or 50 to 60 cycles a. c. ..... 15 watts
or
Battery Operated — using Eveready No. 756 Battery
(Average battery life — 100 hrs. intermittent service)
Battery current ..... "A" 50 ma., "B" 13 ma.

Tube Complement
(1) RCA 1T4 ..... R.F. Amplifier
(2) RCA 1R5 ..... Converter
(3) RCA 1T4 ..... I.F.-Amplifier
(4) RCA 1U5 ..... Det. — AVC — 1st A.F.
(5) RCA 3V4 ..... Output
A selenium rectifier is used.

Weight (Approx.)
Without battery . . 4 lb. 10 oz. With battery . . 7 lb. 12 oz.
Power Output
Undistorted ..... 170 watt
Maximum ..... 320 watt
Loudspeaker ..... 4 in. P.M.
Voice Coil impedance ..... 3.2 ohms at 400 cycles
Cabinet Dimensions
Height . . . . 8 in. Width . . . . 12½ in. Depth . . . . 5⅝ in.

To Remove Chassis:

1. Pull out battery and disconnect battery plug.
2. Unsolder the two loop antenna leads.
3. Remove the two large screws (under handle) in the top of the case.

To Remove Hinges

Remove back from cabinet as described at right. Spread the hinge apart to remove it from the cabinet back.

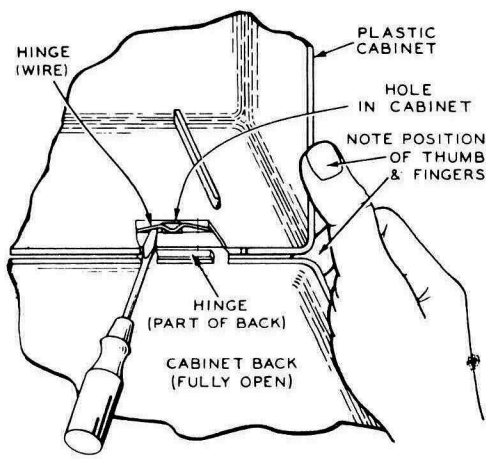

Removal of Cabinet Back

To Remove Cabinet Back

With the back fully open, grip the cabinet as illustrated. Insert a screwdriver under one hinge and pry the center of the hinge out of the opening in the cabinet while maintaining pressure on the back with the fingers and on the cabinet with the thumb. Repeat this procedure with the other hinge. Pull the back straight to the rear using both hands.

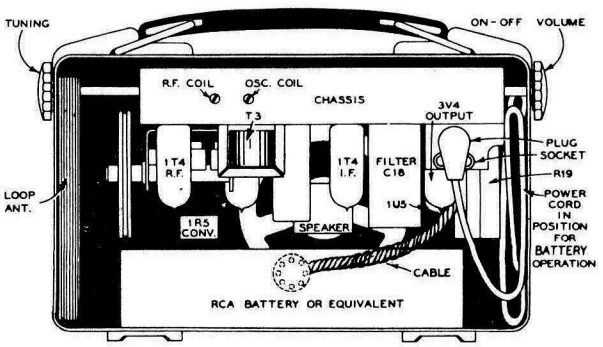

Rear View With Back Removed

Alignment Procedure

Output Meter Alignment — If this method is used, connect the meter across the voice coil and turn the receiver volume control to maximum.

Test Oscillator — For all alignment operations, connect the low side of the test oscillator to the receiver chassis and keep the oscillator output as low as possible to avoid AVC action.

Battery operation of the receiver is preferable during alignment; on AC operation an isolation transformer (117v./117v.) may be necessary for the receiver if the test oscillator is also AC operated.

Dial Pointer Position — With the tuning condenser fully meshed the center of the dial pointer should be in line with the score mark on the chassis.

Step	Connect High Side of Sig. Gen. to —	Sig. Gen. Output	Dial Pointer Setting	Adjust for Max. Output
1	Disconnect loop—remove chassis—remove bottom plate.			
2	Pin #6 of 1T4 I.F. Amplifier thru .005 mf.	455 kc	Quiet point near 1600 kc	2nd I.F. Trans. T2 Top & Bottom
3	Pin #6 of 1R5 Converter thru .005 mf.			1st I.F. Trans. T1 Top & Bottom
4	Replace bottom cover and install chassis in cabinet. Re-connect loop.			
5	Short wire placed near loop for radiated signal	1620 kc	min. cap.	1600 kc osc. trimmer C1-3T
6		1400 kc	1400 kc Signal	1400 kc r.f. & ant. trimmers*
7		Connect a 22,000 ohm resistor in parallel with r.f. tuning cond. C1-2		
8		600 kc	600 kc Signal	L4 osc. core* while rocking gang
9		Remove the 22,000 ohm resistor from r.f. tuning cond. C1-2.		
10		600 kc	600 kc Signal	L3 r.f. core
11	Repeat Steps 5, 6, 7, 8, 9 and 10.			

* The position of the battery affects loop inductance. The battery should be in place during steps 5 to 11.

Critical Lead Dress

1. Dress all filament leads next to chassis.
2. Use short pigtail leads on components to V1, Pin 6.
3. Dress gang leads direct to avoid excess lead length.
4. Dress loop leads away from gang tuning drum.
5. Dress capacitors C3, C4, C6 for RF shielding.
6. Use short pigtail lead on C21 to V3-2 and dress away from Pin 6.
7. Dress capacitors C13 and C17 direct and down to base.

CAUTION.—

Do not remove any tubes from the chassis with the set operating and the plug connected to the power line. Damage to tubes may result.

Dial-Indicator and Drive Mechanism

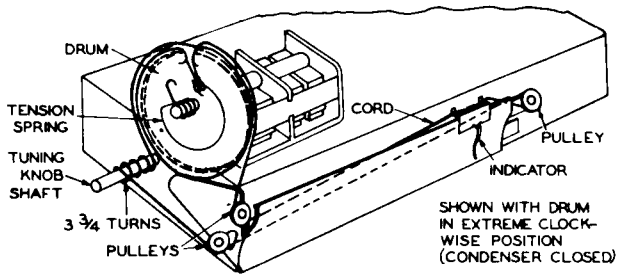

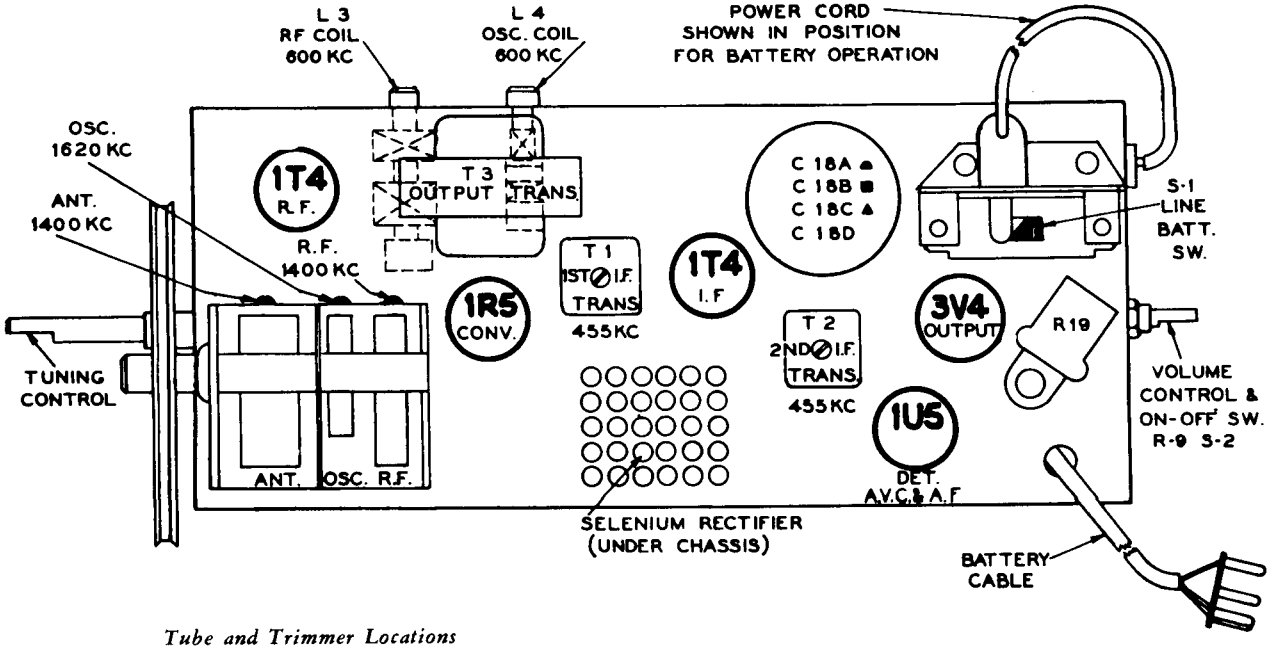

Tube and Trimmer Locations

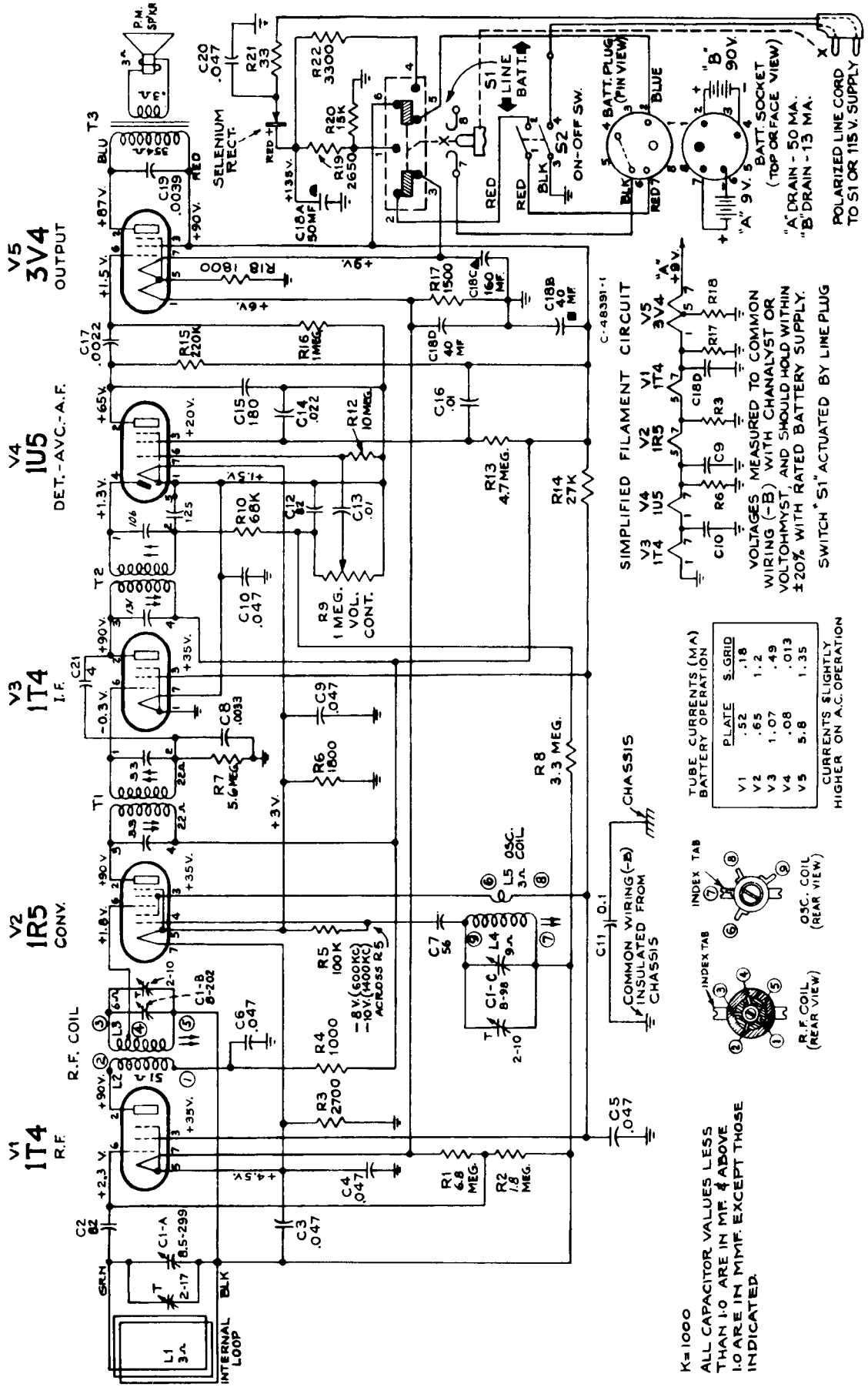

Schematic Diagram

REPLACEMENT PARTS FOR MODEL BP61

Insist on Genuine Factory Tested Parts, which are readily identified and may be purchased from Authorized Dealers.

STOCK No.	DESCRIPTION
	CHASSIS ASSEMBLIES RC-1115
*S-6627	Capacitor-Variable tuning capacitor complete with drive drum C1A, C1B, C1C
73153	Capacitor-Ceramic, 4 mmf. C21
39622	Capacitor-Mica, 56 mmf. C7
71514	Capacitor-Ceramic, 82 mmf. C2, C12
51416	Capacitor-Mica, 180 mmf. C15
*S-6632	Capacitor-Electrolytic comprising 1 section of 50 mfd., 150 volts, 1 section of 40 mfd., 150 volts, 1 section of 160 mfd., 25 volts and 1 section of 40 mfd., 25 volts C18A, C18B, C18C, C18D
	Capacitor-Tubular,paper, .0022 mfd., 600 volts C17
	Capacitor-Tubular,paper, .0033 mfd., 600 volts C8
	Capacitor-Tubular,paper, .0039 mfd., 600 volts C19
	Capacitor-Tubular,paper, .01 mfd., 400 volts C13, C16
	Capacitor-Tubular,paper, .022 mfd., 400 volts C14
	Capacitor-Tubular, paper, .047 mfd., 200 volts C4, C5, C9, C10
	Capacitor-Tubular, paper, .047 mfd., 400 volts C3,C6
	Capacitor-Tubular, moulded paper, .047 mfd., 400 volts C20
	Capacitor-Tubular, paper, oil impregnated, 0.1 mfd., 400 volts C11
*S-6629	Coil-Oscillator coil complete with adjustable core L4, L5
*S-6631	Coil-RF coil complete with adjustable core L2, L3
*S-6626	Control-Volume control and power switch R9,S2
S-4313	Cord-Drive Cord
70022	Cord-Power cord and plug
77051	Dial-Metal dial scale complete with (3) pulleys
74838	Grommet-Power cord strain relief (1 set)
72283	Grommet-Rubber grommet for mounting variable capacitor
18469	Plate-Bakelite mounting plate for electrolytic
*S-6633	Pointer-Station selector pointer
74322	Rectifier-Selenium rectifier
*S-6628	Resistor-Wire wound, 2650 ohms, 7 watts.... R19
	Resistor-Fixed, composition:-
	33 ohms, ±20%, 1 watt R21
	1000 ohms, ±20%, 1/2 watt R4
	1500 ohms, ±10%, 1/2 watt R17
	1800 ohms, ±10%, 1/2 watt R6, R18
	2700 ohms, ±10%, 1/2 watt R3
	3300 ohms, ±10%, 1 watt R22
	15,000 ohms, ±20%, 1/2 watt R20
	27,000 ohms, ±10%, 1/2 watt R14
	68,000 ohms, ±20%, 1/2 watt R10
	100,000 ohms, ±20%, 1/2 watt R5
	220,000 ohms, ±10%, 1/2 watt R15
	1 megohm, ±20%, 1/2 watt R16
	1.8 megohm, ±10%, 1/2 watt R2
	3.3 megohm, ±10%, 1/2 watt R8
	4.7 megohm, ±20%, 1/2 watt R13
	5.6 megohm, ±10%, 1/2 watt R7
	6.8 megohm, ±10%, 1/2 watt R1
	10 megohm, ±20%, 1/2 watt R12
73117	Socket-Tube socket, 7 pin, miniature
76368	Spring-Drive cord spring
*S-4855	Switch-"Line-Battery" switch S1
73129	Transformer-First I.F. transformer complete with adjustable cores T1
S-5721	Transformer-Second I.F. transformer complete with adjustable cores T2
*S-6625	Transformer-Output transformer T3
33726	Washer-"C" washer for tuning knob shaft
	SPEAKER ASSEMBLIES
S-6624	Speaker-4" P.M. speaker complete with cone and voice coil (3.2 ohms)
	MISCELLANEOUS
77068	Antenna-Antenna loop assembled to polystyrene frame and support L1
77060	Back-Cabinet back — polystyrene — complete with strikes
*S-6630	Cable -Battery cable
77061	Cap-Carrying handle cap and chassis support
77065	Case-Case front-less handle, handle support, caps, links and chassis mounting screw
77064	Emblem-"RCA Victor" emblem
77066	Grille-Metal grille
77063	Handle-Carrying handle
74790	Hinge-Cabinet hinge (2 req'd)
77248	Knob-Control knob
77062	Link-Carrying handle link
74734	Spring-Spring clip for knobs
77067	Window-Clear vinylite dial window

* Indicates New Stock Numbers.

Only items listed under stock numbers are available as Replacement Parts.

All parts subject to change or withdrawal without notice.



MODEL BP61X

RCA VICTOR

AC-DC BATTERY PORTABLE RADIO

MODEL BP61X SERVICE DATA

—1952 No. 11—

HEAD OFFICE SERVICE DEPARTMENT
RCA VICTOR COMPANY, LTD
MONTREAL, QUE.

ELECTRICAL AND MECHANICAL SPECIFICATIONS

Tuning Ranges

Standard Broadcast ("A" Band)_____520-1605 kc. (576-186 m.)
Medium Wave ("B" Band)_____2.3-7 mc. (131-42.8 m.)
Short Wave ("C" Band)_____7-22 mc. (42.8-13.7 m.)

Intermediate Frequency _____455 kc.

Tube Complement

(1) RCA 1T4 _____ R.F. Amplifier
(2) RCA 1L6 _____ Converter
(3) RCA 1T4 _____ I.F. Amplifier
(4) RCA 1U5 _____Det.-A.V.C.-A.F. Amp.
(5) RCA 3V4 _____ Output
One selenium rectifier is used.

Power Supply Ratings

Power Line Operation_____105/125 v. d.c. or 50/60 cycles a.c.
Power Consumption ____117 v. a.c.__10 watts, 117 v. d.c.__7 watts

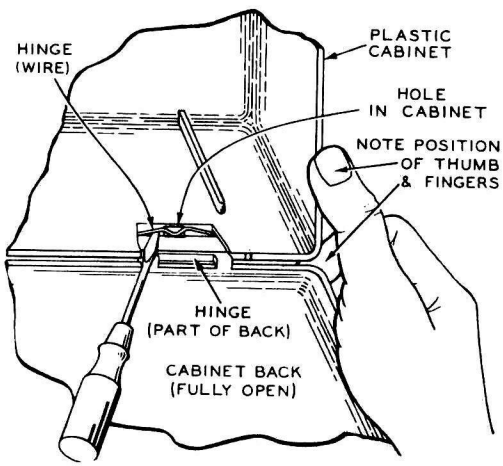

Removal of Cabinet Back

To Remove Cabinet Back

With the back fully open, grip the cabinet as illustrated. Insert a screwdriver under one hinge and pry the center of the hinge out of the opening in the cabinet while maintaining pressure on the back with the fingers and on the cabinet with the thumb. Repeat this procedure with the other hinge. Pull the back straight to the rear using both hands.

To Remove Hinges

Remove back from cabinet as described above. Spread the hinge apart to remove it from the cabinet back.

Battery Pack Operation:

Battery pack_____Eveready #756
Current consumption_____"A" (9 v.) 50 ma.; "B" (90 v.) 14 ma.
Average battery life_____100 hrs. intermittent service

Power Output

Maximum____270 milliwatts____With 10% distortion—150 milliwatts

Loudspeaker

Size and type _____4" (10.2 cm.) P.M. dynamic
Voice coil impedance _____3.2 ohms at 400 cycles

Dimensions (overall)

Height_____8½" Width_____12¾" Depth_____5½"
Weight _____ 7 lbs. less battery
10¾ lbs. with battery

Antennas

This receiver has a built-in loop antenna for "A" band reception and a telescoping rod antenna for "B" and "C" bands. The telescoping rod antenna should be extended to its full height for best short wave reception.

An external antenna and ground may be connected to the ANT and GND screws at the end of the chassis. This may improve reception on all bands.

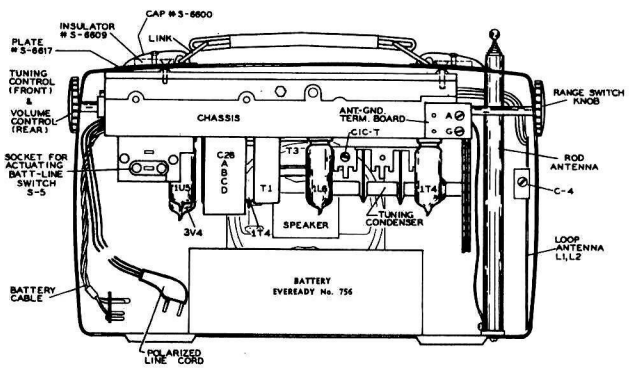

Receiver Assembly (Back View)

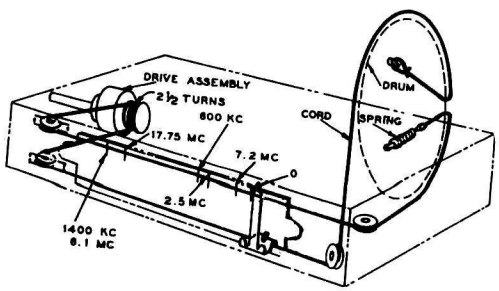

Dial Indicator and Drive Mechanism

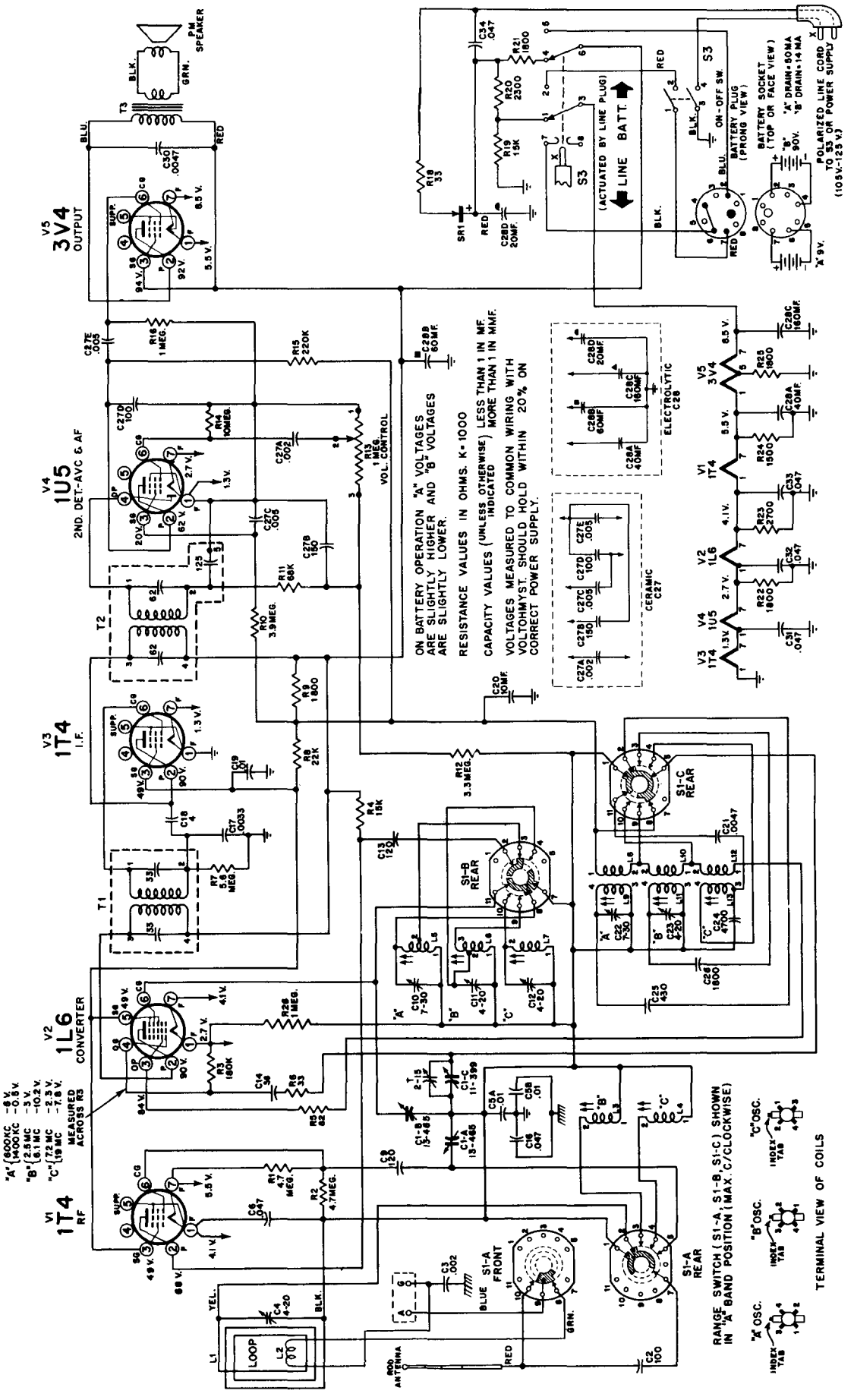

Schematic Diagram

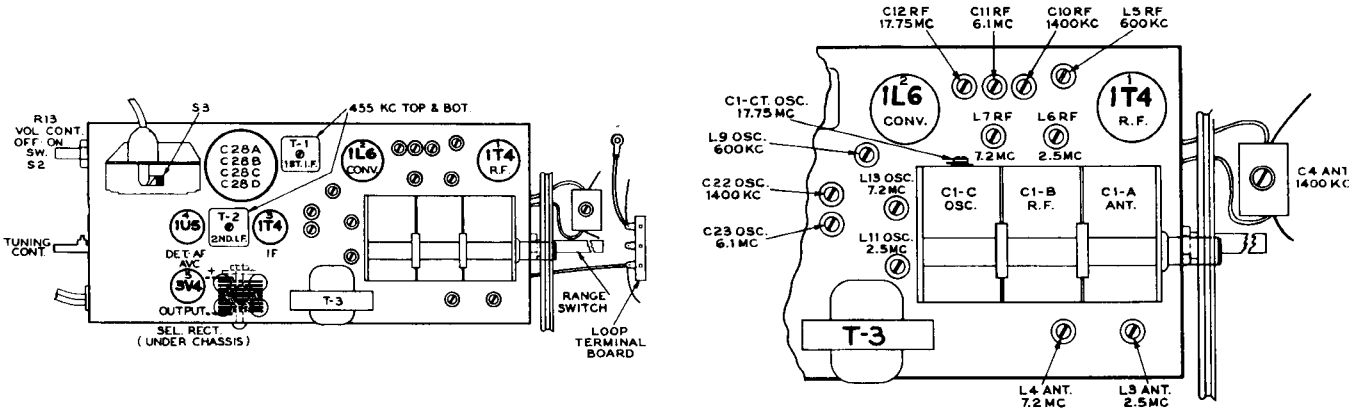

Chassis Layout and Alignment Adjustment

CRITICAL LEAD DRESS

1. Dress all filament leads close to the chassis.
2. Dress 33 ohm fuse resistor (R-18) up and away from all wiring.
3. Dress R-21 up and away from chassis.
4. Dress five section ceramic capacitor (C-27) close to chassis.
5. Keep "hot-side" lead of neutralizing capacitor (C-18) as short as possible and dress capacitor away from IF tube socket.
6. Dress C-19 up and away from IF transformer.
7. Dress all leads away from "C" oscillator coil.
8. Dress C-25 away from "B" oscillator coil.
9. Keep leads on R-3 as short as possble and dress close to 1L6 socket.
10. Dress R-1 and R-2 close to chassis base.
11. Dress loop leads away from tuning drum.
12. Dress lead from oscillator grid of 1L6 (pin #6) with ¼" to ⅛" spacing from capacitor-resistor assembly C-14/R-6

ALIGNMENT PROCEDURE

NOTE—If the test-oscillator is also a.c. operated it may be necessary to use an isolation transformer for the receiver during alignment and to connect the low side of the test oscillator to common wiring—reversal of the plug may reduce hum.

Dial Indicator—With tuning condenser in full mesh, the indicator should be set to the position shown in the illustration "Dial Indicator and Drive Mechanism" on page 1.

Oscillator tracks above signal on all bands. Use minimum capacity peak on oscillator trimmer adjustments and maximum capacity peak on ant. and R.F. trimmer adjustments

ALIGNMENT CHART

ORDER OF ALIGNMENT		TEST OSCILLATOR				RECEIVER				
		CONNECT "HI" SIDE TO	CONNECT "LO" SIDE TO	DUMMY ANTENNA	FREQUENCY SETTING	RANGE SELECTOR	DIAL SETTING	CIRCUIT TO ADJUST	ADJUSTMENT SYMBOLS	NOTES
I.F. ALIGNMENT	1	1T4 (V-3) Grid, Pin #6	Gnd.	.01 Mfd.	455 Kc	"A" Band	"HI" End	2nd I.F. Trans.	T-2 Top & Bottom Cores	Max. Output
	2	1L6 (V-2) Grid Cap Pin #6	Same	Same	Same	Same	Same	1st I.F. Trans.	T-1 Top & Bottom Cores	Same
	3	Repeat Steps 1 & 2.								
"C" Band ALIGNMENT	4	To Rod Ant. Lead	Gnd.	33 Ohms in Series with 18 mmf	17.75 Mc	"C" Band	17.75 Mc	Osc. R.F.	C1C-T C-12	Same
	5	Same	Same	Same	7.2 Mc	Same	7.2 Mc	Osc. R.F. Ant.	L-13 *L-7 *L-4	Same
	6	Repeat Steps 4 & 5.								
"B" Band ALIGNMENT	7	To Rod Antenna	Gnd.	33 Ohms in Series with 18 mmf	6.1 Mc	"B" Band	6.1 Mc	Osc. R.F.	C-23 *C-11	Same
	8	Same	Same	Same	2.5 Mc	Same	2.5 Mc	Osc. R.F. Ant.	L-11 *L-6 *L-3	Same
	9	Repeat Steps 7 & 8								
"A" Band ALIGNMENT	10	Yellow Lead on Loop Ant.	Gnd.	.01 Mfd.	1400 Kc	"A" Band	1400 Kc	Osc. R.F.	C-22 C-10	Same
	11	Same	Same	Same	600 Kc	Same	600 Kc	Osc. R.F.	L-9 *L-5	Same
	12	Repeat Steps 10 & 11.								
	13	Assemble receiver, connect loop ant. leads, install rod antenna, install and connect battery.								
	14	Radiate Signal			1400 Kc	"A" Band	1400 Kc	Loop	C-4	Same
	15	Same			7.2 Mc	"C" Band	7.2 Mc	Ant.*	†L-3	Same
	16	Same			2.5 Mc	"B" Band	2.5 Mc	Ant.	†L-4	Same

* Rock gang, use maximum capacity peak.

† Extend rod antenna to full height. Oscillator tracks above signal on all bands.

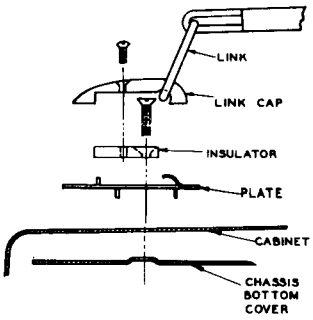

Chassis Mounting

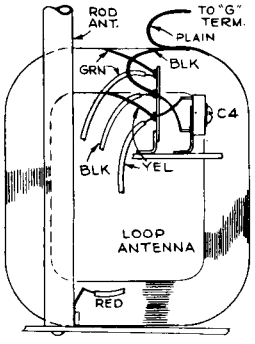

Loop Antenna Connections

REPLACEMENT PARTS FOR MODEL BP61X

Insist on genuine factory tested parts, which are readily identified and may be purchased from authorized dealers.

STOCK No.	DESCRIPTION
	CHASSIS ASSEMBLY
S-6561	Board-ANT-GND terminal board
S-6562	Bracket-Dial cord pulley bracket complete with two pulleys-(tuning drum end.)
S-6563	Capacitor-Trimmer capacitor, 4-20 mmf. (C11, C12, C23)
75189	Capacitor-Trimmer capacitor, 7-30 mmf. (C10, C22)
	Capacitors-Fixed
S-5128	Ceramic, 4 mmf. (C18)
45233	Ceramic, 100 mmf. (C2)
S-5131	Ceramic, 120 mmf. (C9, C13)
S-6724	Mica, 430 mmf. (C25)
S-5136	Mica, 1800 mmf. (C26)
S-5942	Mica, 4700 mmf. (C24)
S-6564	Ceramic, .0022 mf. (C3)
S-4853	Molded paper, .0033 mf., 600V. (C17)
S-9371	Ceramic, .0047 mf. (C21)
S-5469	Molded paper, .0047 mf., 600V. (C30)
S-6326	Ceramic, .01 mf. (C19)
75877	Ceramic, dual, two sections of .01 mf. (C5A, C5B)
S-6565	Ceramic, five sections,(.002 mf. C27A)(150 mmf.C27B) (.005 mf. C27C)(100 mmf. C27D)(.005 mf. C27E)
S-4706	Molded paper, .047 mf., 400V. (C6,C16,C31,C32,C33)
S-5144	Molded paper, .047 mf., 600V. (C34)
S-5145	Electrolytic, 10 mf., 150V.(C20)
S-5146	Electrolytic, comprising one section of 40 mf., 25V., one section of 60 mf., 150V., one section of 160 mf., 25V., and one section of 20 mf., 150V. (C28A, C28B, C28C, C28D)
S-4523	Capacitor and Resistor-Assembly comprising 56 mmf. capacitor and 33 ohm resistor (C14, R6)
S-4454	Clip-Clip for mounting I-F transformers (2 req'd)
S-6567	Coil-"A" band oscillator coil complete with adjustable core (L8, L9)
S-6568	Coil-"B" band oscillator coil complete with adjustable core (L10, L11).
S-6569	Coil-"C" band oscillator coil complete with adjustable core (L12, L13)
S-6570	Coil-"A" band R-F coil complete with adjustable core (L5)
S-6571	Coil-"B" band R-F coil complete with adjustable core (L6)
S-6572	Coil-"C" band R-F coil complete with adjustable core (L7)
S-6573	Coil-"B" band ant. coil (L3)
S-6574	Coil-"C" band ant. coil (L4)
S-6575	Condenser-Variable tuning condenser (C1-A, C1-B, C1-C)
S-6576	Control-Volume control and on-off switch (R13,S2)
S-6577	Cover-Chassis bottom cover
S-6578	Cord-Tuning indicator drive cord (41 inches required)
S-5149	Cord-Power line attachment cord
S-4464	Grommet-Rubber grommet to mount tuning condenser (3 req'd)
S-6579	Indicator-Tuning indicator pointer
S-6580	Pin-Axle pin for drive cord pulleys (tuning control end)
S-6581	Plate-Dial back plate
18469	Plate-Insulating plate to mount electrolytic capacitor
S-5159	Plug-Five pin plug for battery cable
S-5123	Pulley-Drive cord pulley (tuning control end) (2 req'd)
S-6582	Rectifier-Selenium rectifier (SR1)
S-6583	Resistor-Armored wire wound, 2300 ohms, 7 watt (R20)
	Resistors-Fixed Composition
S-6584	33 ohms, 1 watt (R18)
S-6723	82 ohms, ½ watt (R5)
S-5163	1500 ohms, ½ watt (R24)
S-5164	1800 ohms, ½ watt (R9, R21, R22, R25)
S-5167	2700 ohms, ½ watt (R23)
36714	15,000 ohms, ½ watt (R4)
S-6585	15,000 ohms, 1 watt (R19)
S-6395	22,000 ohms, ½ watt (R8)
S-6173	68,000 ohms, ½ watt (R11)
S-6586	180,000 ohms, ½ watt (R3)
S-5647	220,000 ohms, ½ watt (R15)
S-6240	1 megohm, ½ watt (R16, R26)
S-5175	3.3 megohm, ½ watt (R12)
S-6587	3.9 megohm, ½ watt (R10)
S-5176	4.7 megohm, ½ watt (R1, R2)
S-5177	5.6 megohm, ½ watt (R7)
S-6588	10 megohm, ½ watt (R14)
S-6589	Shaft-Tuning control drive shaft assembly
S-6322	Socket-Tube socket for V1 (1T4) or V2 (1L6)
S-6590	Socket-Tube socket for V3 (1T4)
S-6591	Socket-Tube socket for V4 (1U5) or V5 (3V4) tubes
S-4511	Spacer-Metal spacer for mounting tuning condenser (3 req'd)
S-4485	Spring-Drive cord tension spring
S-6592	Switch-Tuning range switch (S1-A,S1-B,S1-C)
S-5186	Switch-Battery-line switch assembly (S3)
S-5229	Transformer-First I-F transformer (T1)
S-5230	Transformer-Second I-F transformer (T2)
S-6593	Transformer-Output transformer (T3)
	SPEAKER ASSEMBLY
S-6597	Speaker-4 inch PM speaker complete with cone and voice coil
	MISCELLANEOUS
S-6598	Antenna-"A" band loop antenna (L2)
S-6599	Antenna-Telescoping rod antenna
S-6622	Back-Cabinet back-GREY
S-6623	Back-Cabinet back-RED
S-6600	Cap-Carrying handle link cap (2 req'd)
S-6601	Capacitor-Trimmer capacitor and bracket assembly (C4)
S-6732	Case-Plastic case (front only) GREY-less handle, grille and loop antenna
S-6733	Case-Plastic case (front only) RED-less handle, grille and loop antenna
S-6604	Catch-Metal catch (on case front) to hold cabinet back (2 req'd)
S-6605	Clip-Metal clip (on case back) to hold cabinet back (2 req'd)
S-6606	Grille-Perforated metal grille
S-4463	Grommet-Rubber grommet for speaker mounting (4 req'd)
S-6607	Dial-Plastic dial scale
S-6355	Emblem-"RCA Victor" emblem
74790	Hinge-Cabinet hinge (2 req'd)
S-6608	Handle-Carrying handle-less links
S-6609	Insulator-Insulating plate (under link caps)
S-6610	Knob-Tuning knob-GREY
S-6611	Knob-Tuning knob-RED
S-6612	Knob-Range switch knob-GREY
S-6613	Knob-Range switch knob-RED
S-6614	Knob-Volume control knob-GREY
S-6615	Knob-Volume control knob-RED
S-6616	Link-Carrying handle link (2 req'd)
S-6617	Plate-Decorative plate for top of cabinet (under link caps) (2 req'd)
S-6618	Screw-#6-32 x 5/8" hex head machine screw for mounting speaker (4 req'd)
S-6619	Screw-#4 self tapping screw to hold clip catch to cabinet front (2 req'd)
S-6620	Screw-#6 self tapping oval head screw to hold dial to cabinet (2 req'd) or link caps to insulator plate (2 req'd)
S-6621	Spacer-Metal spacer for speaker mounting (4 req'd)
S-6086	Spring-Retaining spring for knobs

Only items listed under stock numbers are available as Replacement Parts.

All parts subject to change or withdrawal without notice.

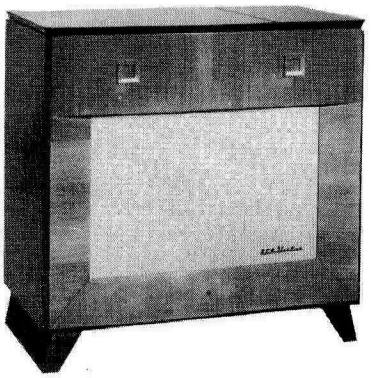

MODEL VRA 85

RCA VICTOR

"HIS MASTER'S VOICE"

RADIO-PHONOGRAPH COMBINATION

MODEL VRA 85

SERVICE DATA

— 1949 No. 12 —

GENERAL SERVICE DIVISION
RCA VICTOR COMPANY LIMITED
MONTREAL, QUE.

Electrical and Mechanical Specifications

FREQUENCY RANGE

Standard Broadcast S.B.	540-1600 K.C.
Short Wave 49-31 M	5.7-13.0 M.C.
25-19 M	11.6-16.0 M.C.
Intermediate Frequency	455 K.C.
Tuning Drive Ratio	12 to 1

RADIATRON COMPLEMENT

(1) Type 6BA6	R.F. Amplifier
(2) Type 6BE6	Converter
(3) Type 6BA6	I.F. Amplifier
(4) Type 6AV6	Det., A.V.C. & 1st A.F.
(5) Type 6AV6	Phase Inverter
(6) Type 6V6GT	Output
(7) Type 6V6GT	Output
(8) Type 5Y3GT	Rectifier

POWER OUTPUT

Undistorted	4.5 watts
Maximum	6 watts

LOUDSPEAKER

Type	12 inch round P.M.
Voice Coil Impedance	2.2 ohms at 400 cycles

POWER SUPPLY RATINGS

Rating A	105-125 volts, 50-60 cycles, 95 watts
Rating B	105-125 volts, 25 cycle, 95 watts

CABINET DIMENSIONS

Height	32¼"
Width	33"
Depth	17¾"

PHONOGRAPH

Type RP-178	Automatic
Record Capacity	Twelve 10 inch or ten 12 inch
Turntable Speed	78 R.P.M.

PICKUP

Type	Crystal
Impedance	100,000 ohms at 1,000 cycles
Average Output	1.4 volts at 400 cycles across 500,000 ohm load

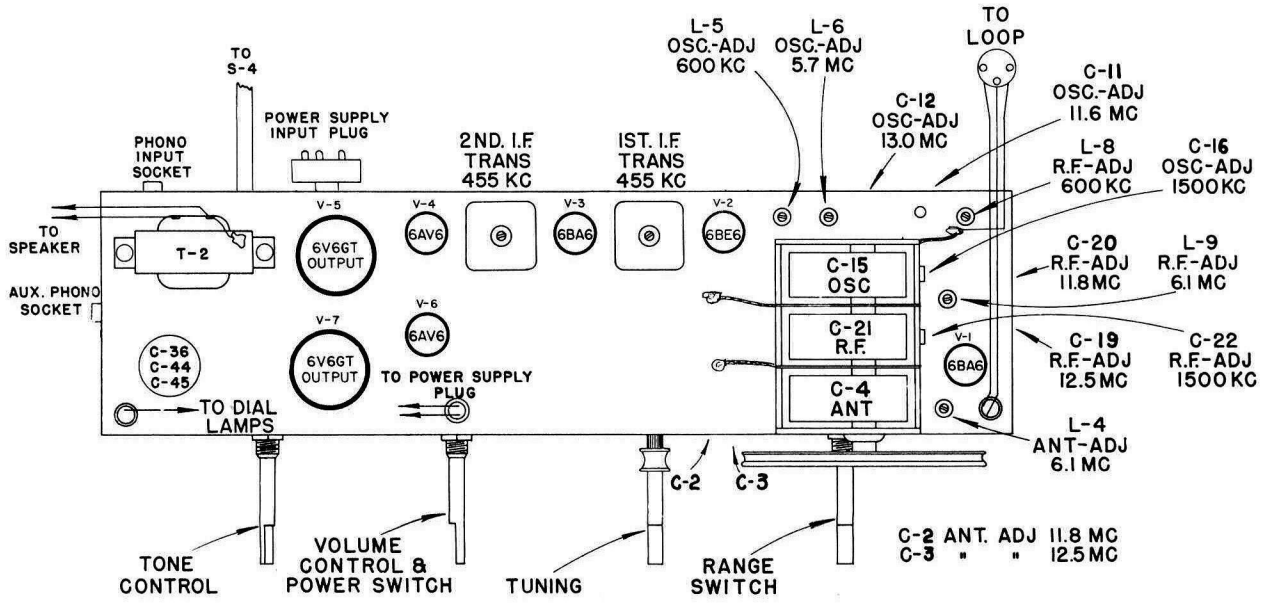

FIG. 1—CHASSIS LAYOUT AND ALIGNMENT ADJUSTMENTS

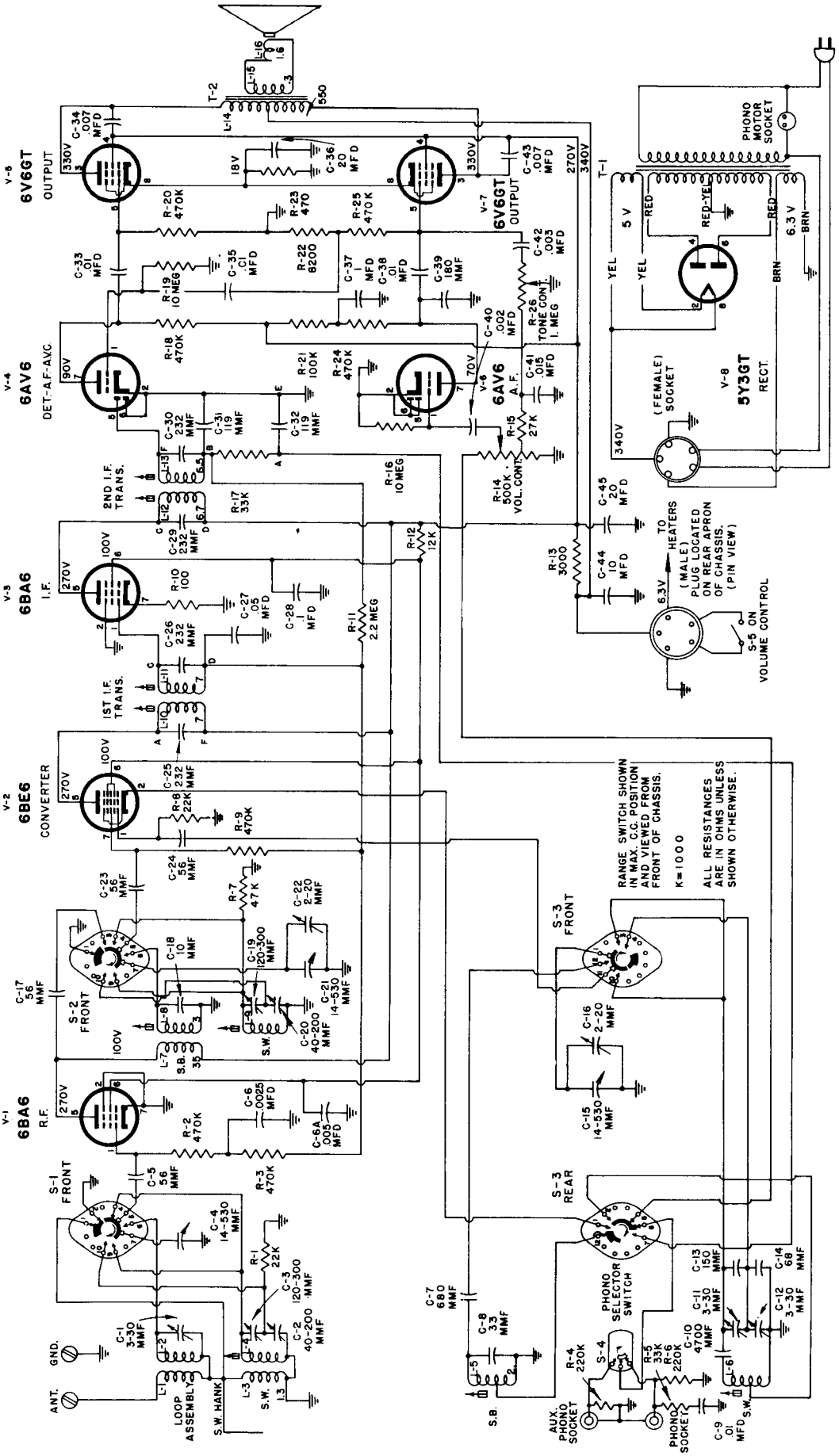

FIG. 2—SCHEMATIC DIAGRAM

ALIGNMENT PROCEDURE

Before aligning set, completely mesh the gang and set the dial pointer on the calibration point at the extreme left hand end of the dial.

When making a complete alignment follow in proper sequence the tabulated form below.

If only a portion of the circuit is to be aligned select the portion required, followed by the remaining steps in the chart.

For "S.B.", 49-31M and 25-19M band alignment use output meter across voice coil keeping Test Oscillator output as low as possible to prevent AVC action.

Cathode-ray oscilloscope and sweep signal generator alignment of the 455 kc. A.M. I.F. transformers is the preferable method. Connect oscilloscope across the volume control. If the required equipment is not available use the method outlined below.

Order of Alignment		TEST OSCILLATOR				RECEIVER				
		Connect "Hi" Side To	Connect "LO" Side To	Dummy Antenna	Frequency Setting	Range Selector	Dial Setting	Circuit to Adjust	Adjustment Symbols	Notes
A.M. I.F. ALIGNMENT	1	6BA6 1st I.F. Grid	Ground	.01 mfd.	455 K.C.	S.B.	High freq. end of dial	2nd I.F. Trans.	L12, L13	Max. Out.
	2	6BE6 Converter Grid	Same	Same	Same	Same	Same	1st I.F. Trans.	L10, L11	Same
S.B. ALIGNMENT	3	"A" on Ant. Ter Board	Ground	200 m.m.f.	1500 K.C.	S.B.	1500 K.C. on dial	Oscillator	C16	Max. Out.
	4	Same	Same	Same	Same	Same	Same	R.F.	C22	Same
	5	Same	Same	Same	Same	Same	Same	Ant.	C1	Same
	6	Same	Same	Same	600 K.C.	Same	600 K.C. on dial	Oscillator	L5	*Same
	7	Same	Same	Same	Same	Same	Same	R.F.	L8	Same
		*NOTE: - Rock Oscillator in to loop at 600 K.C.								
	8	Repeat steps 3 to 7 for maximum output								
49-31M ALIGNMENT	9	"A" on Ant. Ter. Board	Ground	300 ohms	5.7 Mc.	49-31M	Low freq. end of dial	Oscillator	L6	Max. Out.
	10	Same	Same	Same	13.0 Mc.	Same	High freq. end of dial	Oscillator	C12	Same
		Repeat steps 9 and 10 for maximum output.								
	11	Same	Same	Same	6.1 Mc.	Same	Tune in test osc. signal	R.F.	L9	**Same
		**NOTE:- Rock R.F. circuit in to oscillator.				Do nit readjust osc. circuit.				
	12	Same	Same	Same	Same	Same	Same	Ant.	L4	Same
	13	Same	Same	Same	11.8 Mc.	Same	Tune in test osc. signal	R.F.	C20	**Same
	14	Same	Same	Same	Same	Same	Same	Ant.	C2	Same
	15	Repeat steps 11 to 14 for maximum output.								
25-19M ALIGNMENT	16	"A" on Ant. Ter. Board	Ground	300 ohms	11.6 Mc.	25-19M	Low freq. end of dial	Oscillator	C11	Max. Out.
	17	Same	Same	Same	12.5 Mc.	Same	Tune in test osc. signal	R.F.	C19	***Same
		*** NOTE:- Rock R.F. circuit in to oscillator. Do not readjust osc. circuit.								
	18	Check at high freq. end of dial. Receiver should tune to 16 Mc. appros.								

REPLACEMENT PARTS FOR MODEL VRA 85

Insist on genuine factory tested parts, which are readily identified and may be purchased from authorized dealers.

Stock No.	Description	List Price
	CHASSIS ASSEMBLY	
S-3717	Capacitor - Trimmer (C-11, C-12)	
S-3718	" - " (C-19, C-20)	
S-3719	" - " (C-2, C-3)	
39604	" - 10 MMF. 10%, 400 V. Mica(C-18)	
39616	" - 33 MMF. 5% 400 V. Mica (C-8)	
39622	" - 56 MMF. 20% 400 V. Mica (C-5, C-17, C-23, C-24)	
39624	" - 68 MMF. 5%, 400 V. Mica (C-14)	
12725	" -150 MMF. 5%, 400 V. Mica (C-13)	
39634	" -180 MMF. 20%, 400 V. Mica(C-39)	
14498	" -680 MMF. 5%, 400 V. Mica (C-7)	
---	" - .007 Mfd. 500 V. (C-34,C-43)	
---	" - .005 Mfd. 600 V. (C-6A)	
---	" - .003 Mfd. 1600 V. (C-43)	
---	" - .0025 " 400 V. (C6,C40)	
---	" - .05 " 400 V. (C-27)	
---	" - .015 " 400 V. (C-41)	
---	" - .01 " 800 V. (C-33, C-35,C-38)	
---	" - .01 Mfd. 200 V. (C-9)	
---	" - .1 " 400 V. (C28,C37)	
S-3706	Condenser - Variable (C4, C15, C21)	
S-3720	" - Electrolytic (C36, C44, C45) (20-10-20 Mfd.)	
S-3712	Coil - antenna coil S.W. (L-3, L-4)	
S-3713	" - R.F. coil B.C. (L-7, L-8)	
S-3714	" - R.F. coil S.W. (L-9)	
S-3716	" - Osc. coil B.C. (L-5)	
S-3715	" - " " S.W. (L-6)	
S-4786	Indicator - station selector pointer	
S-4358	Loop - Loop assembly (L-1, L-2)	
32641	Plug - Loop antenna connecting plug	
12567	Power Supply Plug	
---	Resistor 470 ohms ½ watt (R-23)	
S-3521	" 3000 " W.W. 5 watt (R-13)	
---	" 8200 " ½ watt (R-22)	
---	" 12,000" 2 " 10% (R-13)	
---	" 22,000" ½ " (R-1, R-8)	
---	" 27,000" ½ " (R-15)	
---	" 33,000" ½ " (R-5,R-17)	
---	" 47,000 " ½ " (R-7)	
---	" 100,000 " ½ " (R-21)	
---	" 470,000 " ½ " (R-2,R-3,R-18, R-20,R-24,R-25)	
---	" 2.2 Megohms ½ watt (R-11)	
---	" 10 " ½ " (R-16,R-19)	
S-4787	Shaft - drive shaft	
S-3709	Switch - range switch (S-1,S-2,S-3)	
14278	Socket - phono socket	

Stock No.	Description	List Price
	CHASSIS ASSEMBLY (Cont'd)	
S-4913	Switch (Phono selector switch) (S-4)	
S-3667	Transformer - 1st I.F. (C-25, C-26, L-10, L-11)	
S-3668	" - 2nd I.F. (C-29, C-30, C-31 C-32, L-12, L-13)	
S-3708	Volume Control & Power Switch 500,00 Ohms (R-14, S-5)	
S-4359	Tone Control - 1 Megohm (R-26)	
	SPEAKER ASSEMBLY (12" P.M.)	
13867	Dust Cap (Pkg. 5)	
S-3568	Cone - cone & voice coil Assy. (L-16)	
S-4912	Output transformer (L-14, L-15)	
	POWER SUPPLY CHASSIS	
12493	Socket - power supply socket (F)	
30868	Socket - phono motor socket (F)	
S-4381	Transformer - power transformer 25 Cy. T-1	
S-4379	" - " " 60 Cy. T-1	
	MISCELLANEOUS ASSEMBLIES	
S-5289	Clamp - back cover (Pkg. 2)	
S-4313	Cord - dial cord	
S-5290	Cloth - Grille cloth	
S-4357	Dial Scale	
S-5291	Decal	
13103	Jewel - lamp cap	
S-4272	Knob - Walnut (tuning - volume)	
S-5287	" - Blonde - (tuning - volume)	
S-4273	" - Walnut - (range switch)	
S-5288	" - Blonde - (range switch)	
32844	Knob block - for phono changeover switch	
---	Lamp - Pilot lamp (Mazda 47)	
---	Lamp - Pilot indicator lamp (Mazda 51)	
S-4672	Monogram - RCA Victor	
31418	Spring - dial cord tension (Pkg. 2)	
S-5292	Support - lid support	
30900	Spring - knob retaining spring (Pkg. 5)	
14270	Spring - " " " (for phono knob) (Pkg. 2)	
	AUTOMATIC RECORD CHANGER ASSEMBLY	
	Refer to RP-178 service notes for Replacement Parts and Service Data.	

All parts and prices subject to change or withdrawal without notice.
Only items listed under stock numbers are available as Replacement Parts.

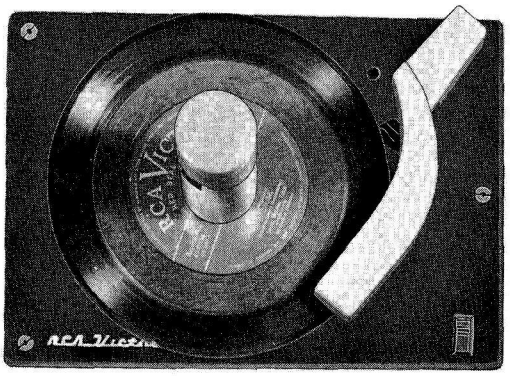

RP-168 SERIES
(Second Issue)

RCA VICTOR

AUTOMATIC RECORD CHANGER

MODEL RP-168 SERIES

(SECOND ISSUE)

SERVICE DATA

—1950 No. 7—

HOME INSTRUMENT SERVICE DIVISION
RCA VICTOR COMPANY LTD.
MONTREAL, CANADA

DESCRIPTION

The record changer mechanism may be used either with or without a metal motorboard. When a metal motorboard is not used, the instrument cabinet serves as the motorboard. Two major changes have been made since the start of production. One change is the type of pickup arm rest, original design used a visible rest on the motorboard or instrument cabinet which has been replaced by a rest on the sub-base. The other major change is in the record separators, the original type used rotating gear type of separators which were replaced by a push-out type of separators.

Many other changes have been made and there are differences in the color and finish of some parts when used with certain instruments. These changes did not necessarily involve a change in the identification applied to the bottom of the mechanism sub-base.

Three different pickups are in use: Two (2) crystal pickups, one (1) magnetic pickup.

Replacement parts should be ordered only by stock number. Refer to the illustrations and parts listings for identification.

MECHANICAL SPECIFICATIONS

This mechanism is designed to play automatically a series of eight new RCA seven-inch fine groove records.

RPM	45
Pickup	Crystal
Sapphire dia.	.0009 inches
Pickup voltage output	Medium
Pickup force	5 grams

AUTOMATIC OPERATION

1. Place a stack of records over the center post, with the desired selections upward the last record to be played on top.
2. Apply power to drive motor.
3. Push the "start-reject" knob to "start" and let go. The mechanism will automatically play in sequence one side of each record stacked on the separator shelves.
4. To reject a record being played push the "start-reject" knob to "reject."
5. At conclusion of playing and as the last record is being repeated, lift tone arm and place on rest. Push "on-off" knob to the "off" position.

CAUTION

1. Avoid handling the tone arm when the mechanism is in cycle.
2. Do not use force to release a jam.
3. Do not try to remove the records on the turntable if the turntable is stopped in cycle.
4. Do not try to operate the mechanism if the separator knives protrude from the center post when the mechanism is out of cycle.

   Turn Power control on. The turntable revolves. Press finger gently against protruding discs until they disappear inside the holder. Do not do this during a change cycle.

LUBRICATION

A light machine oil (SAE No. 10) should be used to oil the bearings of the drive motor.

On all bearing surfaces, excepting the motor bearings, Stock No. S-5262 should be used. On all other sliding surfaces, Stock No. 5462 is recommended. Prices supplied on request.

(Do not oil or grease record separator shelves.)

It is important that the drive motor spindle and the rubber tire on the idler wheel be kept clean and free from oil or grease, dirt, or any foreign material at all times. Carbon tetrachloride or naphtha is satisfactory for cleaning these parts.

CYCLE OF OPERATION

	Function	Explanation
	Place records over the center post and turn the power on	1. Records rest on separator shelves protruding from either side of the center post.
Operator	Push start-reject knob	1. Start-reject knob which is linked to start-reject slide (45A) moves trip pawl (37) into tripping position. 2. As the turntable rotates, the small projection (8A) (extending from the underside of the turntable) contacts end of trip pawl.
Automatic Cycle	Pickup arm rises	1. As the turntable continues to rotate it carries the trip pawl (37) along for a short distance. 2. The stud (37A) on trip pawl applies force against director lever (41) in opposition to tension spring (42). This force continues to be applied until the stud (41B) on the director lever has been forced through the slot and into the cycling cam (8B). 3. The end (41C) of the director lever extending below the motorboard moves away, allowing the muting switch (63) to close. 4. At the same time the stud (41A) pushes the pickup arm lift lever (35) which in turn raises the pickup arm.
	Pickup arm moves out	1. The end (41E) of the director lever (41) contacts stud (58A) on trip lever (58), starting the pickup arm on its outward movement. 2. The stud (58A) on trip lever contacts pickup arm return lever (50), pushing it outward against the tension spring (51). 3. As the pickup arm reaches its outermost position, it is locked in position by the latch (50A) clamping the stud (58A) on the end of the pickup arm return lever.

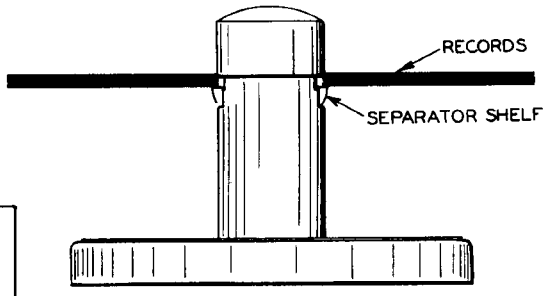

Figure 1.

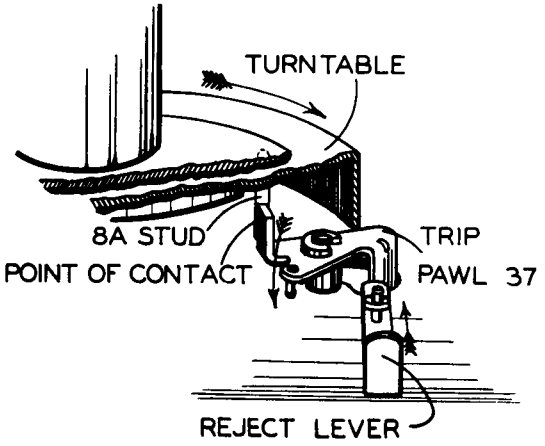

Figure 2.

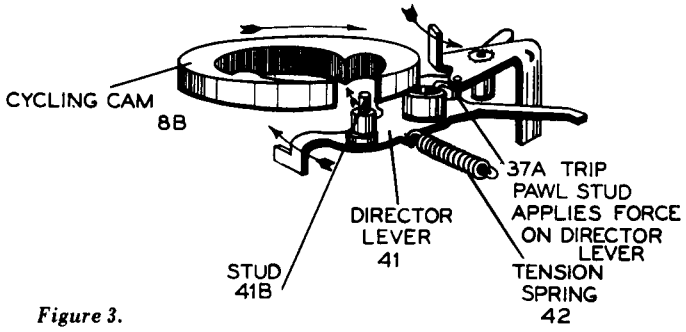

Figure 3.

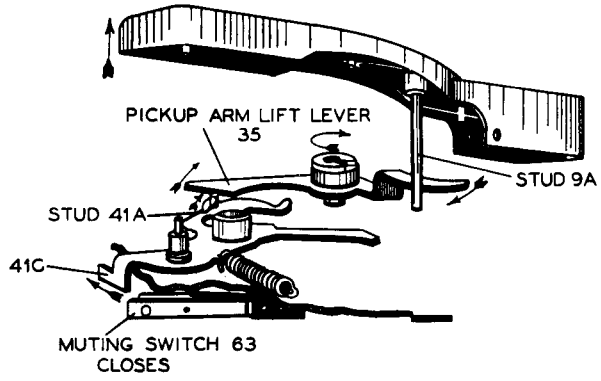

Figure 4.

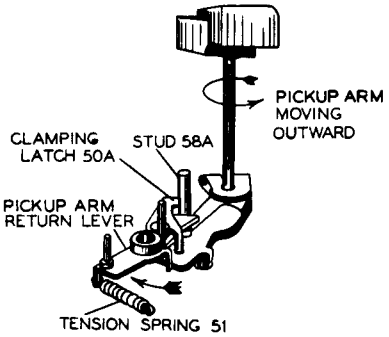

Figure 5.

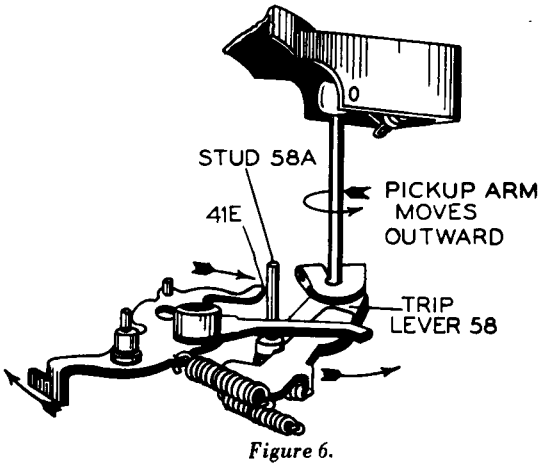

Figure 6.

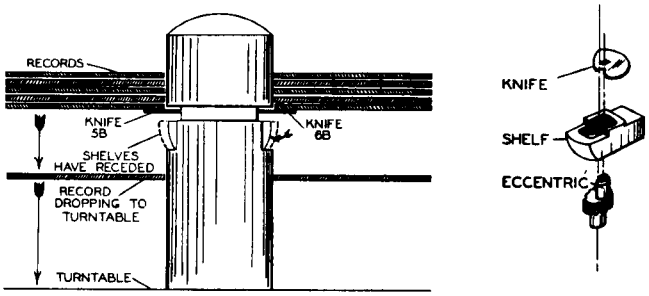

Figure 7.

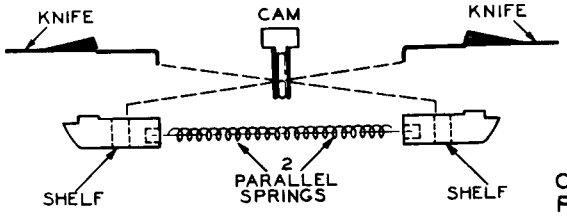

Figure 8.

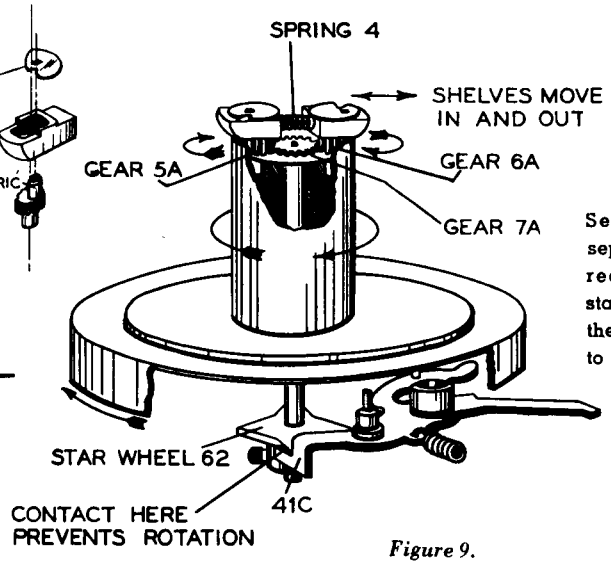

Figure 9.

Separator knives separate the lower record from the stack and allows the record to drop to the turntable

1. While the pickup arm is moving outward, the end (41C) of the director lever (41) extending below the motorboard; contacts and prevents the star wheel (62) from rotating.
2. Since the turntable continues to rotate and the star wheel and shaft remain stationary, the two small gears (5A and 6A) embedded in the upper section of the center post rotate around the gear (7A) on the upper end of the star wheel shaft (7).
3. The eccentric extending from the upper end of the two embedded gears turns in a slot in the separator shelves (5 and 6). This causes the shelves to move in against the tension of spring (4).

   A later type of record separators (knives and shelves), illustrated in Figure 8, are actuated by a cam at the top of the shaft. No gears are used. The cam pushes out on the knives which in turn pull in on the opposite shelves.
4. As the shelves recede the separator knives (5B and 6B), mounted above each separator shelf, separate the lower record of the stack and support the remaining records while the lower record drops to the turntable.

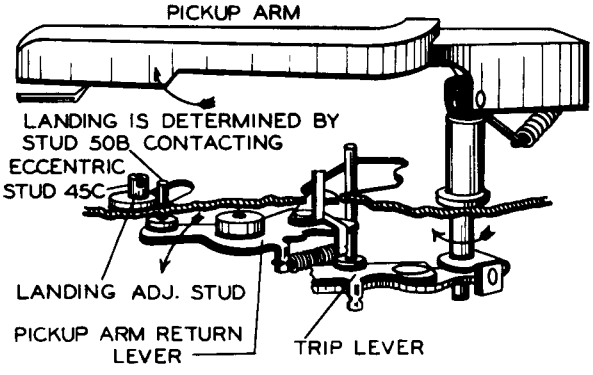

Figure 10.

Figure 11.

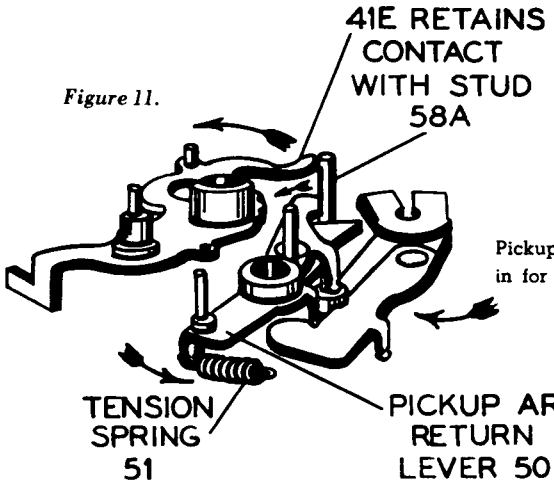

Pickup arm moves in for landing

1. As the director lever (41) continues to move toward the out of cycle position the end of the director lever (41E) retains contact with the stud (58A) on the trip lever (58). This contact stabilizes the inward movement of the pickup arm which is being pushed in by the pickup arm return lever (50).
2. The inward movement of the pickup arm is stopped directly above the landing position due to the stud (50B) on pickup arm return lever coming in contact with the eccentric stud (45C).

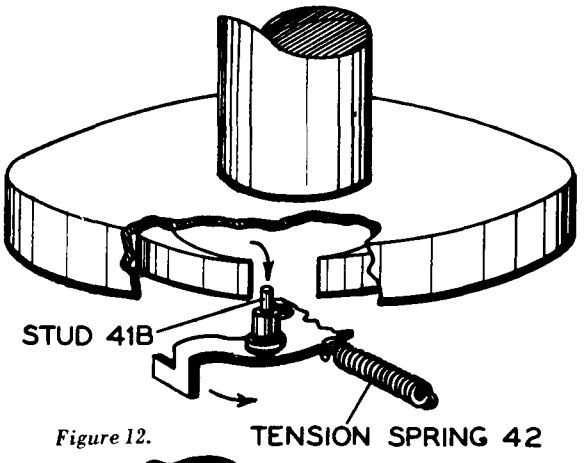

Figure 12.

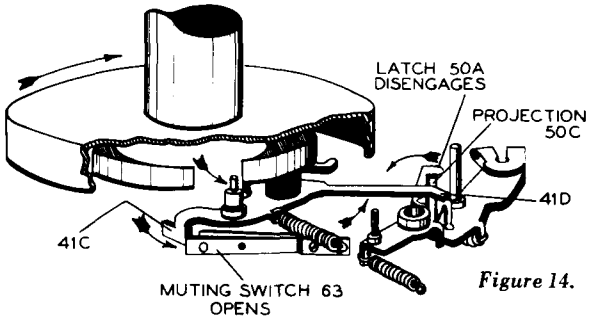

Figure 14.

1. After the selection has been completed the sapphire moves into the tripping groove. At this time the trip lever (58) pushes the trip pawl (37) into position for engagement with the stud (8A) on the underside of the turntable.
2. This contact between stud (8A) and the trip pawl (37) starts another change cycle and the next record is moved into position for playing.

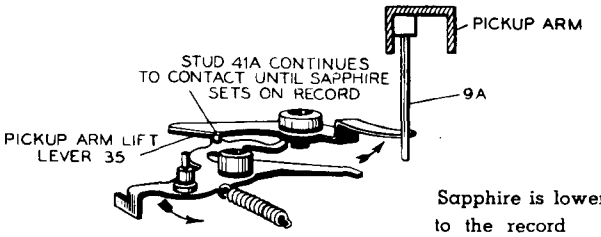

Sapphire is lowered to the record

Figure 13.

1. The stud (41A) on director lever (41) continues to contact pickup arm elevating lever (35) and lowers the sapphire on the start of the record.
2. As the turntable completes one revolution, the stud (41B) on director lever is pulled through the slot in the cycling cam by the tension spring (42).
3. The end of the director lever (41D) contacts projection (50C) and unlatches the pickup arm return lever (50).
4. The end (41C) of the director lever below the motor board moves away from the star wheel and opens muting switch.

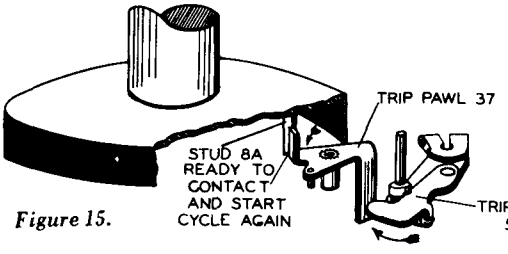

Figure 15.

Playing of record is completed and mechanism starts change cycle

SERVICE HINTS

Care of Pickup

LINT MAY COLLECT TO CLOG THE OPENING IN THE GUARD AT THE STYLUS POINT AND CAUSE POOR RECORD REPRODUCTION. This may require occasional cleaning of the guard opening—clean by carefully brushing with a small soft brush.

Replacement of Stylus

Caution: Never bend the stylus support wire.

CRYSTAL PICKUPS (Stock Nos. 74067

Remove the two screws holding sapphire guard in place and remove the guard. Remove the small nut and washer on the threaded shaft of the sapphire holder and gently push the shaft through the hole in the armature shaft until the sapphire holder assembly comes free.

Extreme care should be used when loosening the nut so that the twisting motion does not break the crystal. Take hold of the lower end of the shaft with a pair of pliers while loosening or tightening the nut, being very careful so as not to strip the threads or break the crystal.

Insert threaded shaft of replacement sapphire holder through armature shaft and replace the washer and nut. Make sure that the sapphire is in the correct position.

Replace the sapphire guard, positioning it by means of the oversize screw slots. Make certain that the sapphire and its supporting wire are centered in the guard. Tighten the guard screws. Before using, check to see that the sapphire projects far enough beyond the guard so that the guard will not touch the record. If necessary, bend the guard a little.

VARIABLE RELUCTANCE PICKUP (Stock No. 74466)

To remove the stylus assembly, insert a bent paper clip or equivalent tool into the stylus stud pin socket at point "A." Press the assembly out from the cartridge with the tool as shown by the arrow in the illustration below.

To replace the stylus assembly, insert the stud pin into the recess "A," with the locating tab positioned above the locating slot "B" between the two pole pieces. Press assembly in firmly by applying pressure upon the stud pin at point "C" with a blunt tool. Care must be taken to press assembly only at point "C" so as not to damage or distort the stylus arm.

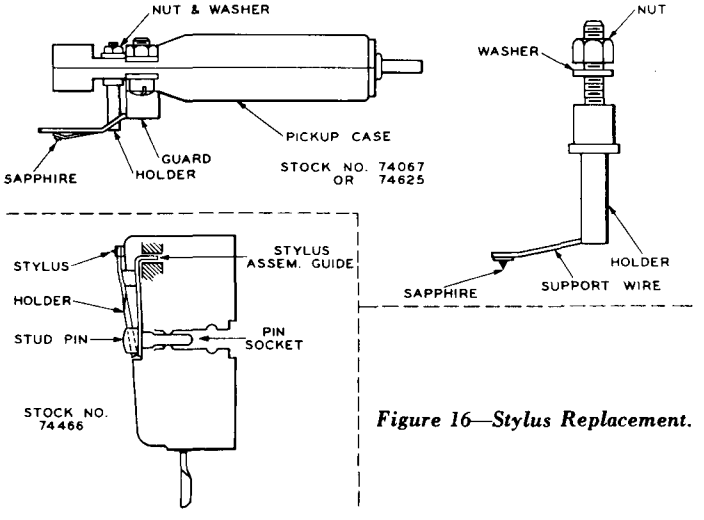

Figure 16—Stylus Replacement.

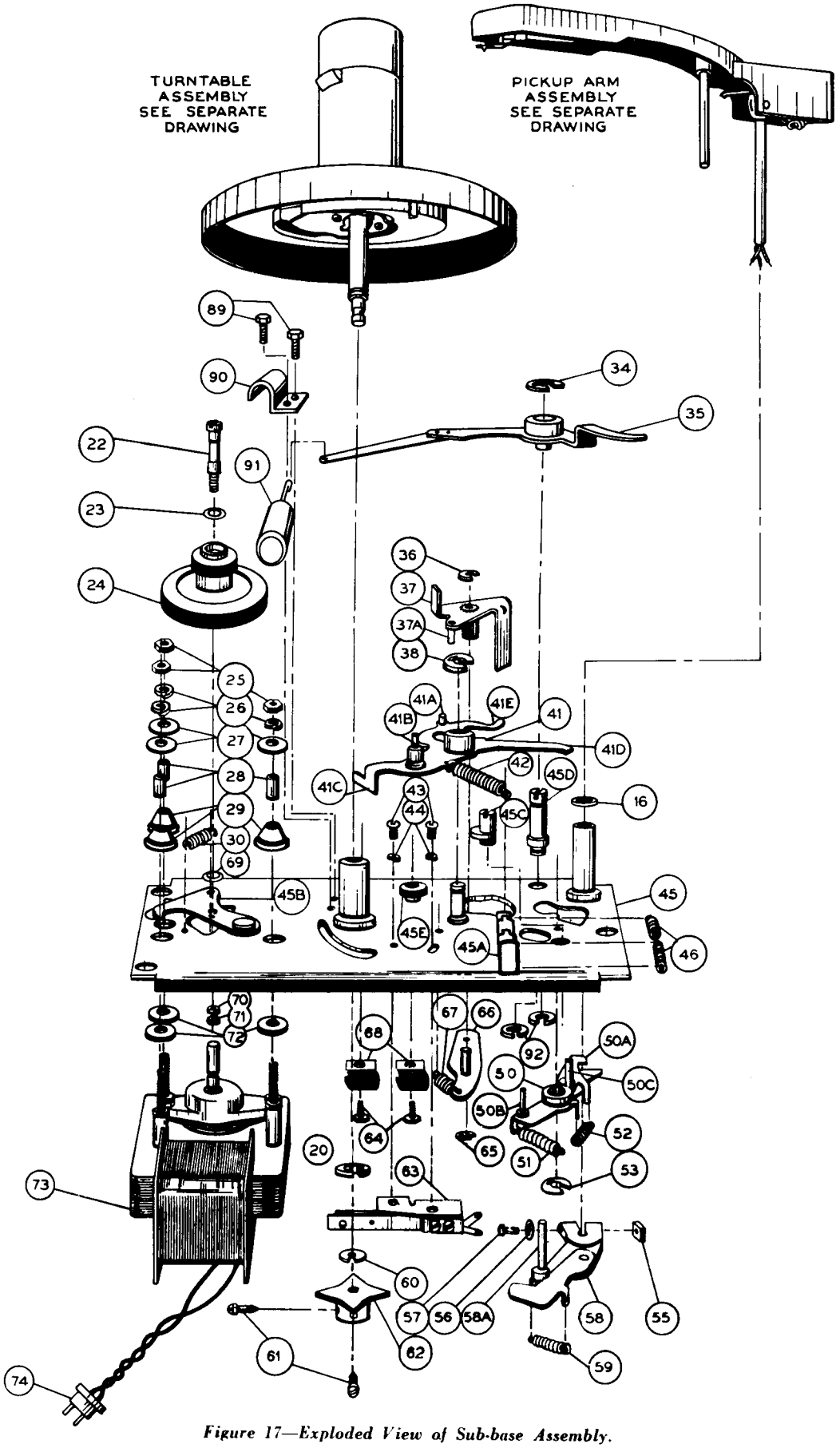

Figure 17—Exploded View of Sub-base Assembly.

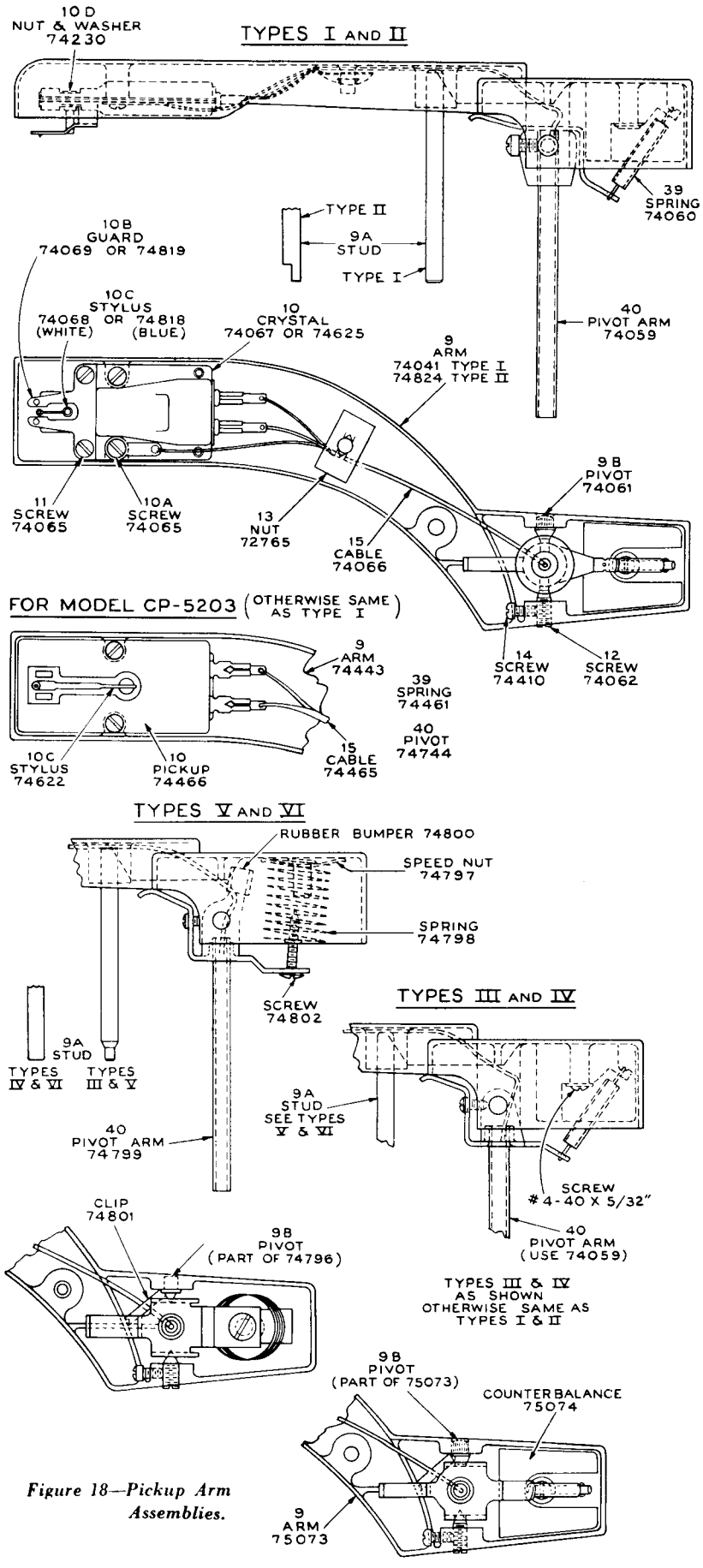

Figure 18—Pickup Arm Assemblies.

SUB-BASE ASSEMBLIES

Type I

Sub-base Stock No. 74070. Has staked studs for spring anchors and one-piece reject lever.

Type II

Same as Type I, except it uses a two-piece reject lever. Use Stock No. 74743 Sub-base (Type III) for replacement.

Type III

Sub-base Stock No. 74743. Same as Type II, except that it has pickup arm rest on sub-base (when motorboard rest is used, the sub-base rest is to be deformed).

Types II-25, III-25

Same as Types II and III except brass.

Type IV

Sub-base Stock No. 74468. It uses an a.c. input connector and audio output jack mounted on a separate bracket. Used only with Model CP-5203.

Type V

Sub-base Stock No. 74856. Has turned up lances for spring anchors. Idler wheel mounting plate (45B—Stock No. 74814) is removable. It has pickup arm rest on sub-base (when motorboard rest is used, the sub-base rest is to be deformed).

Type VI

Stock No. 74803. Similar to Type V. It has pickup arm rest on sub-base. Idler wheel mounting plate (45B) is secured to the sub-base with a shoulder rivet.

Type VI-25

Similar to Type VI except brass.

Type VII

Same as Type VI, except it does not have pickup arm rest on sub-base. Use Stock No. 74803 (Type VI) for replacement (the pickup arm rest is to be deformed).

NOTE: Types VI and VII

Late production of these types have the idler wheel mounting stud (22) staked to its mounting plate. The idler wheel retainer (horseshoe washer) is Stock No. 75081.

NOTE: Type V

Two different main levers (director lever) are used, depending upon which turntable assembly is used. Lever (41), Stock No. 74076 has a long end (41C) and is used with Turntables Types I and II. Lever (41), Stock No. 74857 has a short end and is used with Turntable Type III.

PICKUP ARM ASSEMBLIES (LESS PICKUP)

Type I

Arm Stock No. 74041. Stamped 970488. Pickup arm stud (9A) is full diameter for entire length (do not use where pickup arm rest is on sub-base). Lead counterbalance is riveted to arm.

Arm Stock No. 74443. For Model CP-5203 only. Black finish, otherwise similar to No. 74041.

Type II

Arm Stock No. 74824. Same as No. 74041 except that stud (9A) has a flat on one side at bottom end. Can be used with either type of pickup rest.

Type III

Arm stock No. 75073. Stamped 3R1. Similar to No. 74824 except that a different pivot (9B) is used and the lead counter-balance is fastened to the arm with a screw. Stud (9A) is of smaller diameter at bottom end. Can be used with either type of pickup rest. Use only with No. 74059 pivot arm.

Type IV

Same as Type III except that stud (9A) is of full diameter for entire length. Use No. 75073 for replacemant.

Type V

Arm Stock No. 74796. Stamped 3R1. Similar to Type III except that a different pivot (9B) is used and the lead counter-balance is not used. A 5/8" O.D. counter-balance spring is used. Can be used with either type of pickup rest. Use only with No. 74799 pivot arm.

Type VI

Same as Type V except that stud (9A) is of full diameter for entire length. Use No. 74796 for replacement.

REPLACEMENT PARTS FOR MODEL RP-168 SERIES

Insist on Genuine Factory Tested Parts, which are readily identified and may be purchased from Authorized Dealers.

STOCK NO.	ILL. NO.	DESCRIPTION
74256	16	Washer-Vellutex washer (Pkg.5)
74080	17-19	Washer-Washer for turntable bearing (Pkg.5)
72349	18	Bearing-turntable thrust bearing
72688	20	Washer-"C" washer for turntable assy.
74079	22	Stud-Idler wheel mounting stud
74078	23	Washer-Dumping washer for idler wheel (Top) (Pkg.5)
74077	24	Wheel-Idler wheel for all models except Model CP5203
74470	24	Wheel-Idler wheel for model CP5203
74132	25	Hardware-Motor mtg.hardware consisting of three hex nuts
---	26	Three lockwashers
---	27-72	Six flat lockwashers
---	28	Three spacers
74087	29	Grommet-rubber grommet to mount motor (Pkg.2)
74089	30	Spring-Idler wheel spring (and direction lever)
35969	34-38	Washer-"C" washer for tone arm lift lever (Pkg.5)
74073	35	Lever-pickup arm lift lever for mechanisms without dashpot
74757	35	Lever-pickup arm lift lever for mechanisms with dashpot
---	35	Lever-Two piece pickup arm lift lever (Use No.74073 or 74757)
74805	--	Spring-Tension spring for two piece pickup arm lift lever (.170" O.D. x ¾")
33726	36	Washer-"C" washer for trip pawl (Pkg.5)
74072	37	Pawl-trip pawl
74076	41	Lever-Director lever for use with turntable having rotating gear record separators
74857	41	Lever-Director lever for use with turntable having push-out record separators
73084	42	Spring-Director lever spring (Pkg.2)
	43	Screw-#6-32 screw to mount muting switch
	44	Lockwasher-#6 lockwasher(external) to mount muting switch
74070	45	Base-sub base assy complete with all staked and riveted parts including idler lever and reject lever - Type I without pickup rest
74743	45	Base-sub-base assembly complete with all staked and riveted parts including idler lever and reject lever-Type I without pickup rest
74743	45	Base-sub-base assy complete with all staked and riveted parts including idler lever and reject lever. Type III with pickup rest
74468	45	Base-sub base assembly complete with all staked and riveted parts including idler lever and reject lever less #74473 bracket - Type IV - for RP-168-2, used only on Model CP-5203
74473	--	Bracket-metal bracket with power input connector and ausio output jack - RP-168-2 only
74856	45	Base-sub-base assembly complete with all staked and riveted parts - less idler lever and reject lever. Type V with pick-up rest
74803	45	Base-sub-base assembly complete with all staked and riveted parts including idler lever-less reject lever. Type VI with pickup rest.
S-5707	45	Base-sub-base assembly complete with all staked and riveted parts, including idler lever and reject lever-Type III - 25 - Brass
S-5706	45	Base-sub-base assembly complete with all staked and riveted parts, including reject lever-less idler mechanism - Type VI - 25 - Brass
74860	45A-1	Lever-Reject lever-bottom section-for sub-base-Types V,VI and VIII
74861	45A-2	Lever-Reject lever-top section,for sub-base - Types V,VI and VII
74814	45B	Plate-Idler wheel mounting plate and stud-for sub-base Type V
74870	45B-1	Retainer-Idler wheel retainer (Spring Sleeve)for use with No. 74814 plate (45B)
75081	45B-1	Retainer-Idler wheel retainer (horseshoe washer)for use with sub-base types VI and VII(late production)
74804	45B-2	Washer-Idler wheel bearing washer (½" O.D. x .185" I.D. x .032" thick)for sub-base types VI and VII (late production)
74430	45-C	Stud-Eccentric stud for landing adjustment
74429	45-D	Stud-Eccentric stud for height adjustment
74082	45-E	Washer-Felt washer(½" O.D. ¼" I.D. x 3/16" thick (Pkg.5)
74086	46	Spring-Reject lever spring(Pkg.2)
74427	46	Spring-Reject lever spring for sub-bases having two-piece reject lever (Pkg.2)
74070	50	Lever-return lever(includes spring #51)
74085	51	Spring-Return lever actuating spring
74075	52	Spring-Return lever latch spring
---	54	Washer) To clamp trip lever
---	55	Nut) (Ill. No.58)
---	56	Washer) To pivot arm shaft
---	57	Screw) (Ill. No.40)
74099	58	Lever-trip lever(includes items 54,55,56 and 59)
74426	59	Spring-Trip lever spring
33726	60	Washer-"C" washer for star wheel shaft (Pkg.5)
74083	61	Screw-#6-32 x .281" cone point set screw for star wheel (Pkg.3)
74081	62	Wheel-Star Wheel
74088	63	Switch-Muting switch
	64	Screw-#8x1/4" self tapping screw
33726	65	Washer-"C" washer to retain trip pawl lever (Pkg.5)
74245	66	Lever-Trip pawl lever
74100	67	Spring-Trip pawl take up spring (Pkg.2)
	68	Clamp-Cable clamp

REPLACEMENT PARTS FOR MODEL RP-168 SERIES (Cont'd)

Insist on Genuine Factory Tested Parts, which are readily identified and may be purchased from Authorized Dealers.

STOCK NO.	ILL. NO.	DESCRIPTION
74078	69	Washer-Dampening washer for idler wheel (bottom) (Pkg.5)
---	70	Washer-#4 lockwasher for idler mounting stud (Ill.No.22)
---	71	Nut-#4-40 hex nut for idler wheel mounting stud (Ill. No.22)
---	72	Washer-Part of No.74133-See Ill. No.27
74071	73	Motor-115 volt, 60 cycle motor complete with connector-shaded pole type. Not suitable for 50 cy. conversion
S-5248	73	Motor-115 volt-25 cycle motor
74469	73	Motor-115 volt,60 cycle motor complete with connector and 5 mfd. capacitor for RP-168-2 only
74621	--	Capacitor-Motor capacitor for No. 74469 Motor
30870	74	Connector-Two prong male plug connector for motor cable
---	89	Screw-#8x¼" self tapping screw
74859	90	Clamp-To mount dash-pot
74428	91	Dash-pot-pneumatic dash-pot complete with plunger
74431	92	Washer-"C" washer for mounting adj. studs No. 74429 (Ill.No. 450) and No.74430(Ill.No.45 C)
74041	9	Arm-Pickup arm shell and stud - with pivot (9R)and lead counter-balance type 1 for use with rest on motor board
74443	9	Arm-Pickup arm shell and stud-with pivot (9B and lead counter-balance for model CP-5203 only-black finish
74824	9	Arm-Pickup arm shell and stud-with pivot((B)and lead counter-balance -Type II for use with rest on sub-base
75073	9	Arm-Pickup arm shell and stud with pivot (9B)less lead counter-balance-Type III for use with either type of pickup rest
74796	9	Arm-Pickup arm shell and stud-with pivot(9B)-less balance spring-Type V for use with either type of pickup rest
74061	9B	Pivot-Pickup arm pivot-for use with arms No.74041,No.74443,No.74824, No.75058 only (Pkg.3)
74067	10	Pickup-Crystal pickup cartridge complete including sapphire and guard
74466	10	Pickup-Magnetic pickup cartridge complete with stylus-for model CP-5203 only
74065	10A	Screw-#2-56x3#16" fillister head screw to mount No.74067 crystal pickup (Pkg.2)
74464	10A	Screw-#2-56x¼" fillister head screw to mount No.74466 pickup-for Model CP-5203 only
74069	10B	Guard-Stylus guard for No.74067 pickup
74068	10C	Sapphire-Sapphire and holder
74622	10C	Stylus-Diamond stylus and holder for No.74466 pickup(Model CP-5203)
74230	10D	Washer-and nut-to mount No.74068 stylus (Pkg.5)
74065	11	Screw-#2-56x3/16"fillister head screw(Pkg.2)to mount stylus guard on No.74067 pickup
74062	12	Screw-#8-32x13/32"cone point pivot adjusting screw (Pkg.2)
72765	13	Nut-Speed nut to hold pickup arm cable(Pkg.2)
74801	--	Clip-Spring clip to hold pickup arm cable(used only on pickup arm Type V and VI No.74796
74410	14	Screw-No.4-40x3/16"fillister head screw to lock pivot screw No. 74062 (Pkg.3)
74066	15	Cable-3-wire twisted pickup arm cable complete with connectors
74465	15	Cable-Shielded pickup arm cable complete with connectors-Model CP-5203 only
74060	39	Spring-Counter-balance spring(.171" O.D.x.695" . 43 turns)for Pickup Arm Types I,II,III and IV when using No.74067,No.74625 or No. 74984 pickups (most models)
74461	39	Spring-Counter-balance spring(.185" O.D. x .695" - 29¾ turns) for Model CP-5203 only
74798	39	Spring-Counter-balance spring(5/8" O.D.-11 turns)for Pickup Arm Types V and VI(Stock No.74796)
74797	--	Nut-Speed nut to hold No.74798 spring in Pickup Arm Types V & VI
75074	--	Weight-Lead counter-balance weight for Pickup Arm Types III and IV
---	--	Screw No.4-40 round head screw to hold No.75074 weight to No.75073 Arm
74059	40	Arm-Pivot arm and shaft for use with all pickup arms having lead counter-balance except Model CP-5203
74744	40	Arm-Pivot arm and shaft for Model CP-5203 only
74799	40	Arm-Pivot arm and shaft for use with pickup arm types V and VI
74802	--	Screw-No.4x9/16" oval head counter-balance adjusting screw for use with No.74799 pivot arm
74800	--	Bumper-Rubber bumper for No.74799 pivot arm
74090	1	Nose-Spindle nose-RED(early type-thin wall) for Turntable Type I
74620	1	Nose-Spindle nose-RED'late type-thick wall)for Turntable Type I or II
74863	1	Nose-Spindle nose-RED-for Turntable Type III
74472	1	Nose-Spindle nose-BLACK-for Turntable Type I
74795	1	Nose-Spindle nose-BLACK-for Turntable Type III
74091	2	Spring-Spindle nose spring-formed - for spindle nose No.74090, No. 74620 or No. 74472
74862	2	Spring-Spindle nose spring-formed wire - for spindle nose No.74863 or No.74795
---	3	Screw-No.6-32 round head machine screw for spindle nose spring No. 74091
74095	4	Spring-Separator shelf return spring (.180" O.D. x 1-1/16" - 10 turns)for turntable types I and II
74866	4	Spring-Separator shelf return spring (.118" O.D. x ¾" -16 turns) - two requires for Turntable Type III
74096	5-6	Separator-Separate knife,shelf and gear assembly for Turntable Types I and II
74865	5-6	Shelf-Separator shelf for Turntable Type III
74864	5B 6B	Separator-Separator knife for Turntable Type III
74092	7	Shaft-Star wheel shaft and gear assembly for Turntable Types I and II
74867	7	Shaft-Star wheel shaft with cam for Turntable Type III
33726	--	Washer-"C" washer for top of No. 64766 shaft
74042	8	Turntable-Turntable with TAN MARBLEIZED mat-Type I-Use No.74090 RED NOSE (thin wall)
75065	8	Turntable-Turntable with TAN MARBLEIZED mat-Type I-use No.74620 RED NOSE (thick wall)

REPLACEMENT PARTS FOR MODEL RP-168 SERIES (Cont'd)

Insist on Genuine Factory Tested Parts, which are readily identified and may be purchased from Authorized Dealers.

STOCK NO.	ILL. NO.	DESCRIPTION
74813	8	Turntable-Turntable with TAN MARBLE-IZED mat-Type III-Use No.74863 RED nose
74445	8	Turntable-Turntable with BLACK mat-Type I-Use No.74472 BLACK nose
75145	8	Turntable-Turntable with RED mat-Type I-Use No.74452 BLACK nose
75059	8	Turntable-Turntable with RED mat Type III-Use No.74795 BLACK nose
74094	8C	Mat-Turntable mat-TAN MARBLEIZED
74471	8C	Mat-Turntable mat-BLACK
74794	8C	Mat-Turntable mat-RED
---	21	Screw-No.6-32 x 1¾" fillister head (holds nose to spindle)two required for Turntable Type I
74868	21	Screw-No.6-32x1-5/8" fillister head screw 'holds nose to spindle)two required for Turntable Types II and III
74869	21A	Washer-No.6 flat washer(for use under No.74868 screw-two required for Turntable Types II and III
---	31	Screw-No.4-40 x 3/8" fillister head screw(for use with cam III No.33) two req'd for Turntable Type I
---	32	Washer-No.4 lockwasher-for use with cam(Ill.No.33)-two required for Turntable Type I
74231	33	Cam-Follower cam for Turntable Type I
74623		Hardware-To mount sub-base to plastic cabinet of Model 9EY3
	47	Three (3) grommets)
	--	Three (3) spacers)
	48	Three (3) flat washers)
---	49	Screw-No.8-32x3/4"-for Models 9EY3
---	49	Screw-No.8-32x1/2"-for 9JY and VA45
---	49	Screw-No.8-32x3/8"-for instruments using spring mounting of motorboard
74209	75	Cover-Mounting screw cover(threaded type 3 required)-use with No.74424 screw (Ill.No.76)
74581	75	Cover-Mounting screw cover(plug-in type 3 required)-use with No.74582 screw (Ill.No.76
74424	76	Screw-No.8-32x1¾" special screw (with tapped hole)for mounting record changer(3 required)-use with No.74209 cover(Ill.No.75)
74582	76	Screw-No.8-32x1¾" special screw (non-tapped hole)for mounting record changer(3 required)-use with No.74581 cover(Ill.No.75)
73549	77	Emblem-"RCA Victor" emblem-metal
74674	77	Emblem-"RCA Victor" emblem-plastic
74422	78	Spring-Comical spring for mounting record changer-upper L.H. side (2 req'd)
74423	79	Spring-Conical spring for mounting record changer-bottom(3 req'd)
74208	80	Nut-Tee nut for mounting record changer(3 required)
74184	81	Motorboard-Motorboard complete with welded brackets and stud-less rest and operating parts for all models with motorboard rest
74444	81	Motorboard-Motorboard complete with welded brackets and stud-less operating parts-for Model CP-5203
74987	81	Motorboard-Motorboard complete with welded brackets and stud-less operating parts-for all models without motorboard rest
74185	82	Rest-Pickup arm rest-maroon-for all models(where required)
74446	82	Rest-Pickup arm rest-black-used on Model CP-5203 only
74210	83	Knob-Reject control knob-maroon
74467	83	Knob-Reject control knob-black
74421	84	Spring-Conical spring for mounting record changer-upper R.H. side (1 required)
74212	85	Nut-Speed nut for reject control knob
---	86	Screw-No.6 self-tapping screw
33726	87	Washer-"C" washer for mounting reject lever actuating lever
74211	88	Lever-Reject lever actuating lever

REFER TO REPLACEMENT PARTS PRICE LIST FOR PRICES

Items listed but without stock Nos. are not stock items.

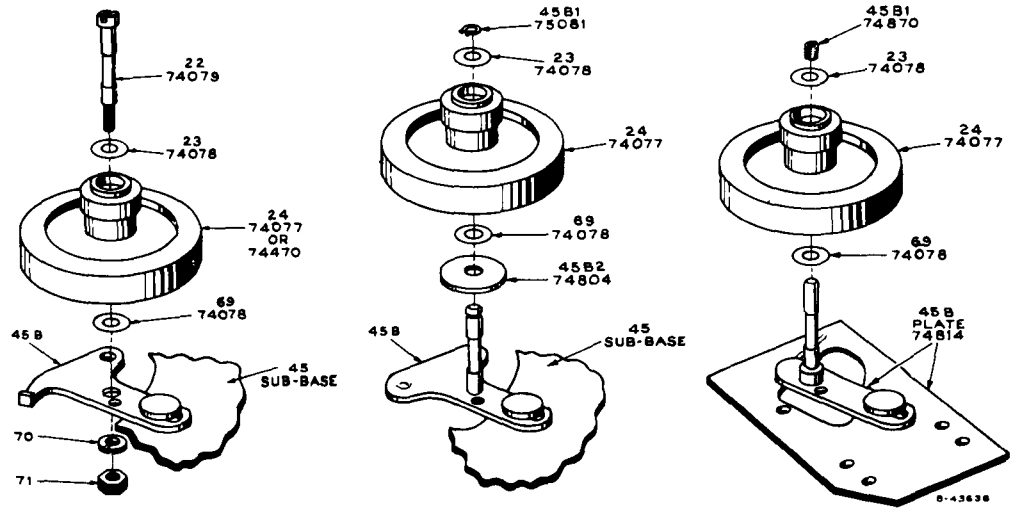

Figure 19—Idler Wheel Mounting.

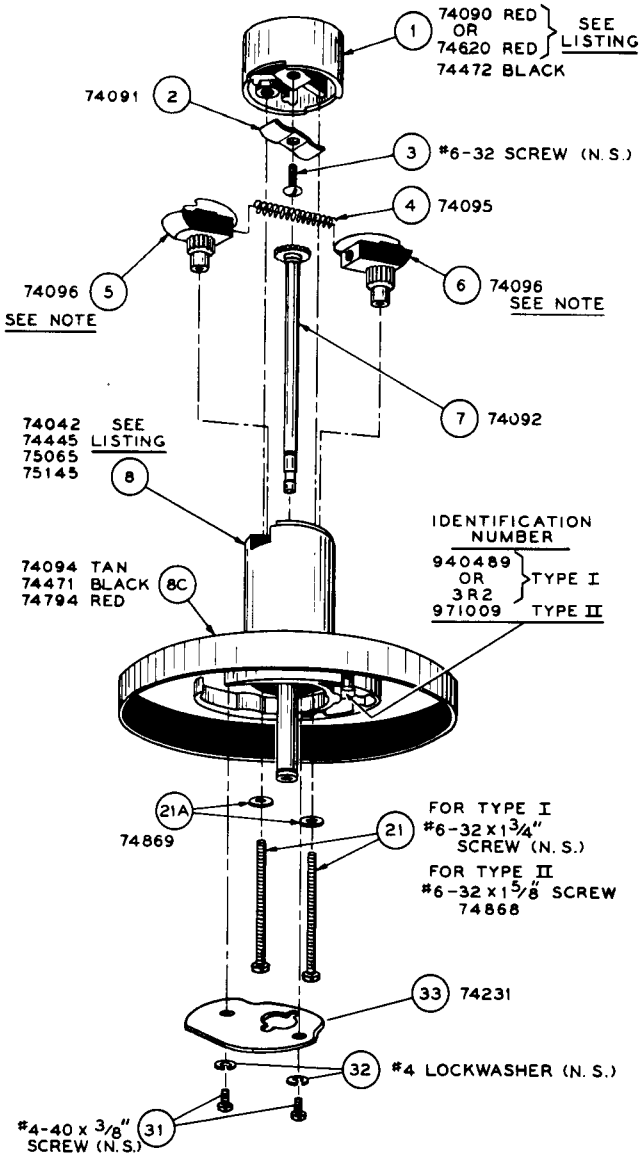

Figure 20—Turntable Assemblies, Types I and II.

Main Lever vs Record Separators:

Two different main levers (director lever) are used depending upon the type of record separators being used.

Stock No. 74076 lever is used only with the rotating gear type of record separators. The end (41C) that engages the star wheel is long.

Stock No. 74857 lever is used only with the push-out type of record separators. The end (41C) that engages the star wheel is short.

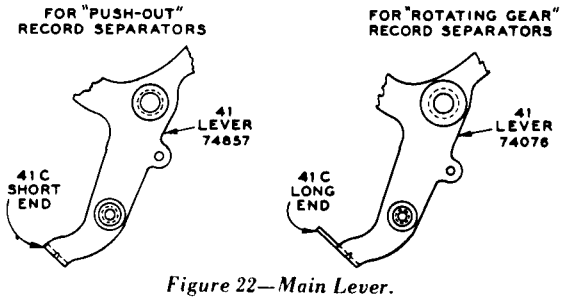

Figure 22—Main Lever.

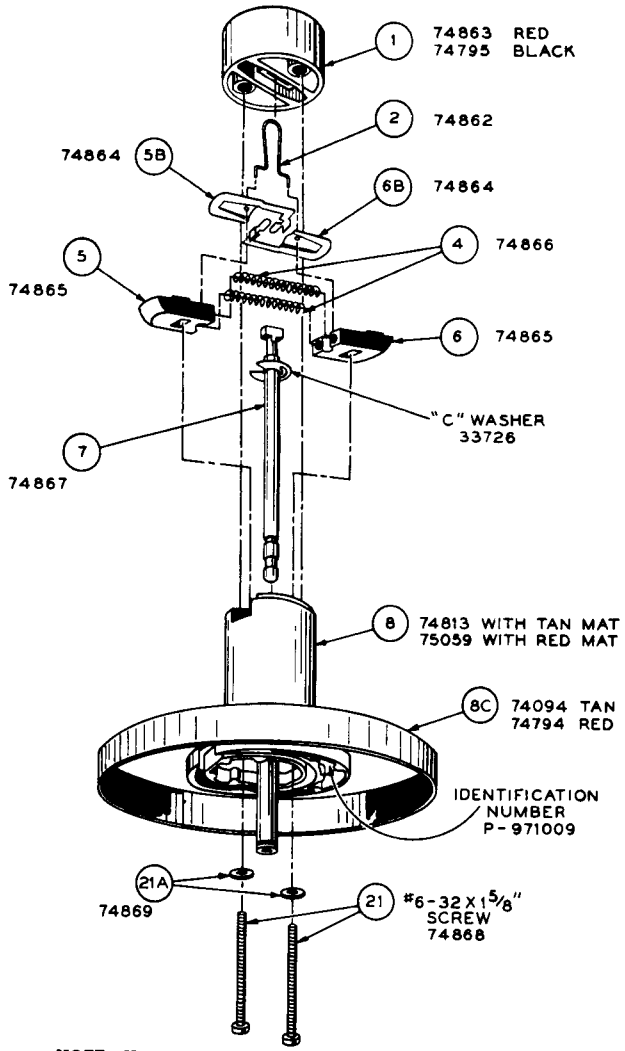

NOTE: Use care in dis-assembly to prevent loss of springs. Remove screws—lift nose slightly—hold both separator knives down against shelves—then remove nose.

Figure 21—Turntable Assemblies, Type III.

TURNTABLE ASSEMBLIES

Type I

Turntable Stock No. 74042. Stamped 940489 or 3R2. Has TAN MARBLEIZED mat and uses rotating gear type of record separators. Use No. 74090 spindle nose—RED (thin wall)

Turntable Stock No. 75065. Same as No. 74042, except for diameter at top of spindle. Use No. 74620 spindle nose—RED (thick wall)

Turntable Stock No. 75145. Same as No. 75065, except that it has a RED mat. Use No. 74472 spindle nose —BLACK

Turntable Stock No. 74445. Same as No. 75065, except for finish and BLACK mat. Used only on Model CP-5203. Use No. 74472 spindle nose (BLACK)

Type II

Stamped 971009. Follower cam (33) is a part of the turntable casting. Otherwise, similar to No. 75065. Use No. 75065 turntable, and No. 74231 cam for replacement

Type III

Stock No. 74813. Stamped 971009. Has TAN MARBLEIZED mat and uses push-out type of record separators. Use No. 74863 spindle nose—RED. Although this turntable bears the same stamping as Type II, it does not have the shafts required for mounting the rotating gear type of separators

Stock No. 75059. Same as No. 74813, except that a RED mat is used. Use No. 74795 spindle nose—BLACK

NOTE: Main Lever (41)

Stock No. 74076 lever (with long end 41C) is used in conjunction with rotating gear type of record separators. Stock No. 74857 lever (with short end 41C) is used in conjunction with push-out type of record separators

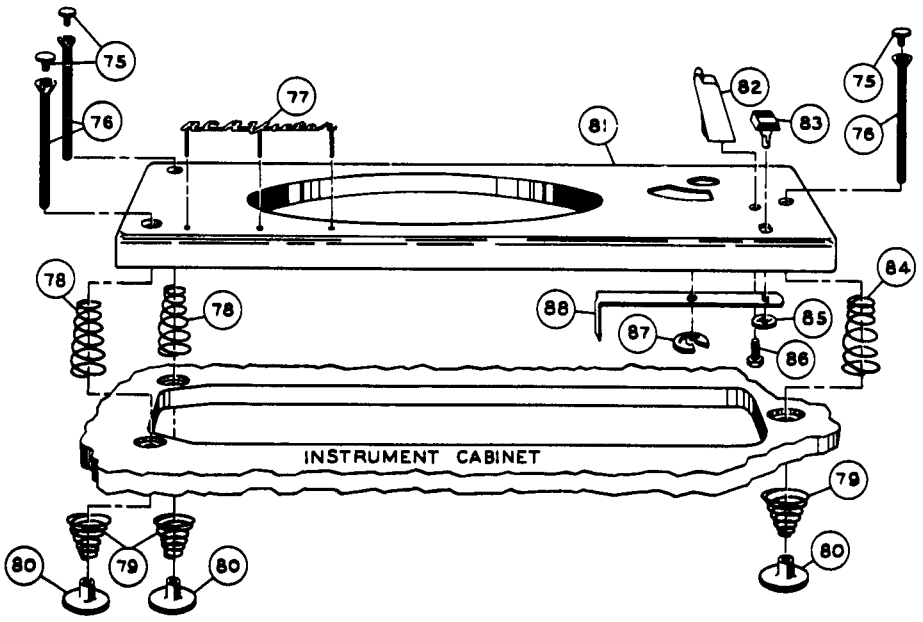

Figure 23— Motorboard Assemblies.

CHANGES—SERVICE HINTS (Continued from Page 4)

Pickup Arm Rest:

Two different types of pickup arm rest are in use. The original type was visible on the motorboard. The type presently in use is a metal projection on the sub-base.

The correct grouping of parts must be used, refer to descriptive text on page 6. The two types are illustrated below.

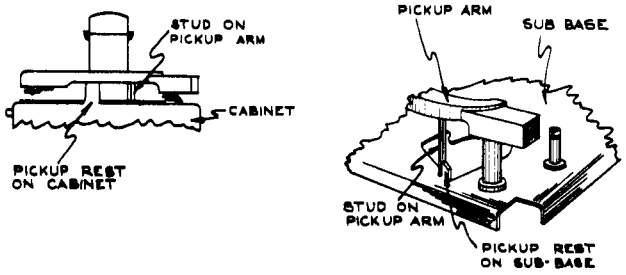

Figure 24—Pickup Arm Rest.

Spindle Nose and Turntable (Type I):

The wall thickness of the spindle nose (Ill. No. 1) has been increased and the machined shoulder at the top of the turntable decreased accordingly. Thick wall spindle nose will not fit on early type turntable. The new type red spindle nose (thick wall) is available as Stock No. 74620.

NOTE: The screws (Ill. No. 21) which hold the spindle nose to the turntable should not be tightened too tight. The spindle nose can be distorted and cause records to bind.

Figure 26—Spindle Nose.

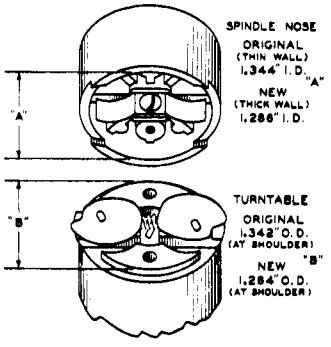

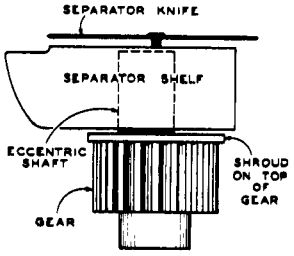

Figure 27— Separator Assembly.

Sub-base Mounting:

The sub-base is attached directly to metal motorboards and to the cabinets of Models 9JY and VA-45 with three screws and three washers. No grommets or spacers are used.

On all other instruments, the sub-base is cushion mounted to the plastic cabinet with rubber grommets metal spacers, screws and washers. The mounting is illustrated below.

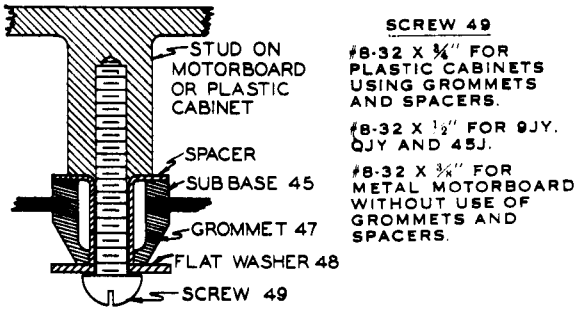

Figure 25—Sub-base Mounting.

Separator Assemblies (Rotating Gear Type):

A flat has been added to the separator gears eccentric shafts. This flat permits the shelf (Ill. Nos. 5 and 6) to stay out until the nose of the blade (Ill. Nos. 5B and 6B) is approximately half-way out. Then the shelf retracts fast. This faster action minimizes unequal dropping of records.

The two types of separator assemblies (Stock No. 74092 Ill. No. 7) are NOT INTERCHANGEABLE. In addition the early type has been grouped according to mold number (at bottom of spring hole) and installed in pairs.

Group Mold Number	Group Mold Number	Group Mold Number
1, 3, 5	9, 10	0, 8

Assemblies of one group should not be mixed with assemblies of another group or unequal dropping of records may occur. If a matched pair is not available, first check timing of separator knives then the dropping of records; it may be necessary to file the edge of the shelf which released the record last.

The late type (having a flat on the eccentric shaft) do not need to be grouped, but an early assembly should not be used in conjunction with a late assembly (use two early or two late assemblies). The late type may be identified by its having a shroud at the top of the gear (see Figure 27).

CHANGES—SERVICE HINTS (Continued)

Turntable Bearing Thrust Washers:

Three thrust washers (Ill. Nos. 17 and 19) are now being used in mounting the turntable. This is done because it was found that the top edge of some idler wheels would contact a non-machined surface on the underside of the turntable and cause noise similar to that caused by a rough idler wheel.

Jamming:

On early RP-168-1 mechanisms it was sometimes possible to jam the mechanism by maintaining pressure on the reject button during cycle. If such jamming should occur check the following:

1. The tip radius of the reject lever (Ill. No. 45A) should be 1/16".
2. The edges of the trip pawl (Ill. No. 37) should have a slightly rounded edge (.010" radius).

Present production uses a two piece spring loaded reject lever (Ill. No. 45A) which eliminates the possibility of jamming caused by pressure on the reject button.

Jamming can also be caused by incorrect positioning of the director lever (main lever) (Ill. No. 41) in relation to the star wheel (Ill. No. 62). See Figure 35.

Intermittent Non-Tripping:

The trip lever spring (Ill. No. 59) has been increased in tension to provide better tripping action. The new spring has 30 turns and is available as Stock No. 74426.

To reduce friction a washer has been added between the trip pawl (Ill. No. 37) and the trip pawl lever (Ill. No. 66). It is available as Stock No. 74453.

Eccentric Adjustment Studs:

In early production the eccentric landing (Ill. No. 45C) and height (Ill. No. 45D) adjustment studs were staked to the sub-base assembly. They are now secured to the sub-base assembly with "C" washers. The landing adjustment stud (Ill. No. 45C) is available as Stock No. 74430. The height adjustment stud (Ill. No. 45D) as Stock No. 74429 and the "C" washer (Ill. No. 92) as Stock No. 74431.

Pneumatic Dashpot

A pneumatic dashpot (Stock No. 74428) has been added to improve pickup arm landing. The dashpot case is clamped to the base sub-assembly and the plunger is attached to the long end of the tone arm lift lever (Ill. No. 35) (Stock No. 74757).

ERRATIC PICKUP LANDING

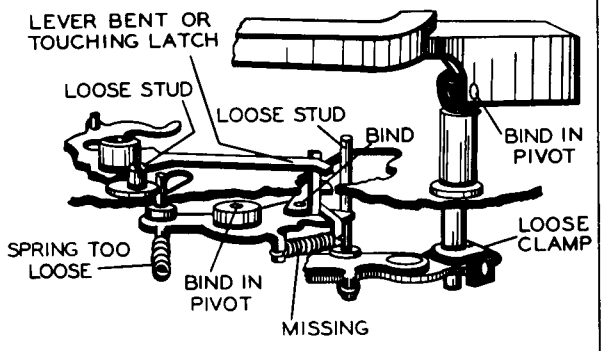

Figure 28.

DISTORTED OUTPUT

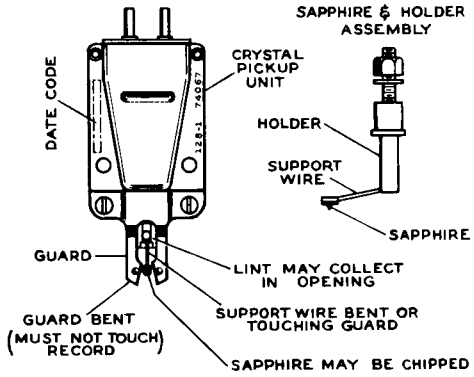

Figure 29.

WOW (Speed Variation)

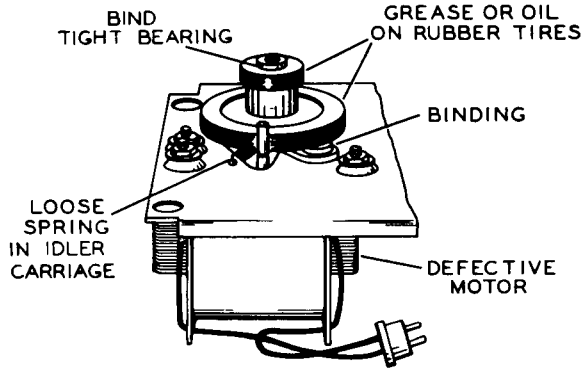

Figure 30.

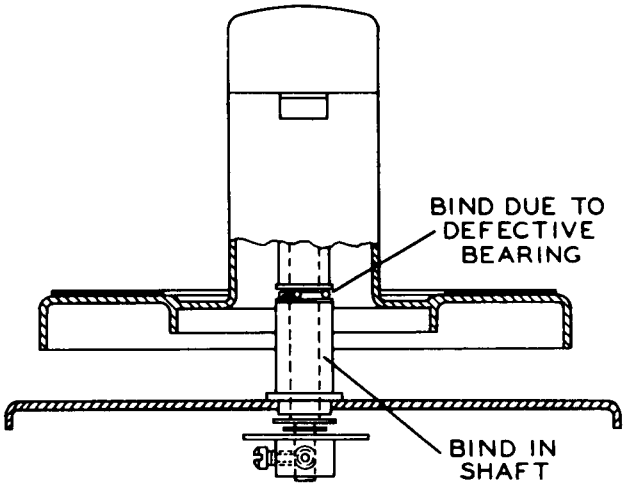

Figure 31.

SERVICE HINTS CONTINUED ON PAGE 15

ADJUSTMENTS

Adjustment Sequence:

1. Synchronize separator shelf (Ill. No. 5) and separator knife (Ill. No. 5B) action (necessary only on rotating gear type of record separators).
2. Adjust position of star wheel (Ill. No. 62).
3. Adjust position of director lever (main lever) (Ill. No. 41) in relation to the star wheel by bending if necessary.
4. Adjust tone arm pivot screw (Ill. No. 12) for minimum side play without binding.
5. Adjust sapphire height above motorboard.
6. Adjust tripping position.
7. Adjust landing position.
8. Adjust pickup arm height during cycle.
9. Adjust position of muting switch so that contacts are open 1/32" during playing and are closed during cycle.

Separator Synchronization:

The following applies only to the rotating gear type of record separators:

1. Make certain the two embedded gears (5 and 6) are meshed with gear (7A) on the upper end of the star wheel shaft so the action of the separator knives is synchronized.

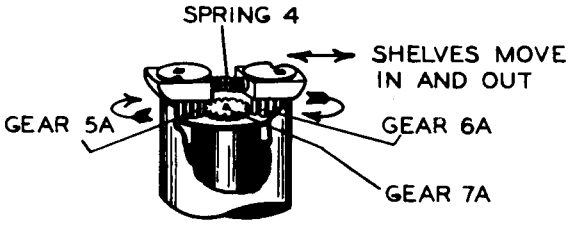

Figure 32.

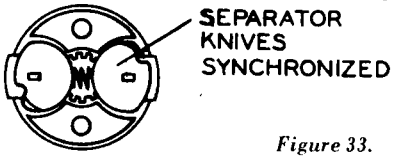

Figure 33.

Star Wheel Position:

1. Turn the star wheel so that the separator knives are in the position indicated in Figure 33 for rotating gear type of separators or fully retracted for push-out separators.
2. Loosen the two set screws (61) sufficiently to permit the star wheel to rotate without disturbing the shaft (7).
3. Rotate the star wheel points directly to a cam screw or nose screw (visible through slot) as shown in Figure 34.
4. Tighten the two set screws (61) and rotate the mechanism through a complete cycle to check operation. The separator knives must rotate 360° to the starting position as indicated in Figure 33.

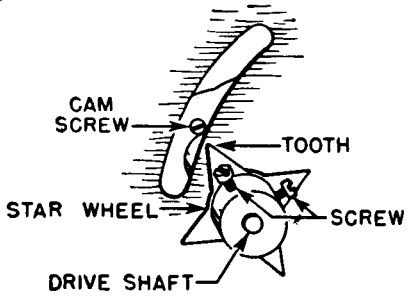

Figure 34—Star Wheel Timing.

Director Lever Position:

Push reject lever and rotate the turntable slowly by hand until the end (41C) of the director lever moves in to its limit of travel so when the star wheel is rotated it contacts by the amount indicated in Figure 35 for lever with long end. For lever with short end, the star wheel should first contact the end (41C) approximately 1 16-inch from the front or leading edge of the lever.

If the end of the director lever (main lever) is too close to the star wheel, it will jam. If too far away, it will cause erratic record dropping. If in doubt and unable to measure, move the end toward the star wheel until most of the play is removed when the star wheel is moved back and forth at this setting. With the push-out record separators and the lever with short end, there will be considerable play but the tension of the separator springs holds the star wheel against the lever.

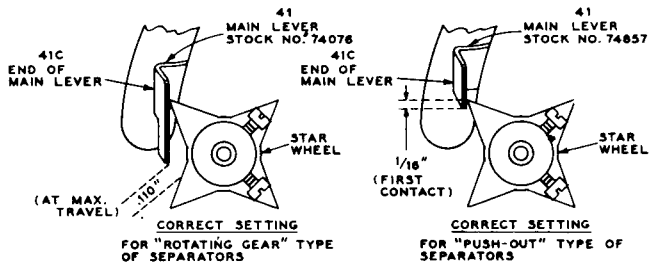

Figure 35 Setting of Director Lever.

Pivot Screw Adjustment:

Loosen the pivot locking screw (14) and adjust the pivot screw (12) for minimum side play without causing binding.

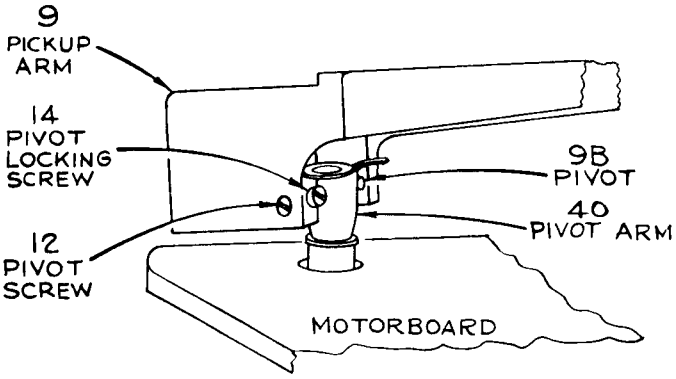

Figure 36.

Sapphire Height Adjustment (Out of Cycle):

Bend the lug on the pivot arm (40) so that the sapphire point is approximately 1/16" above the motorboard.

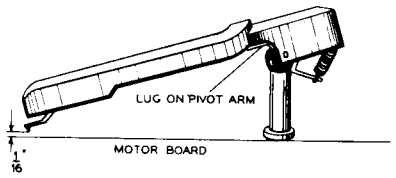

Figure 37.

Tripping Adjustment:

1. Assemble the pickup arm and trip lever assemblies as shown in Figure 38. Leave the clamping screw (57) loose enough to permit horizontal movement of the trip lever on the shaft. (Allow approximately .010 inch vertical end play.)
2. Turn the eccentric landing adjustment stud (45C) to determine the inward and outward limit of adjustment, then turn it to a setting half-way between the limits.

ADJUSTMENTS (Continued)

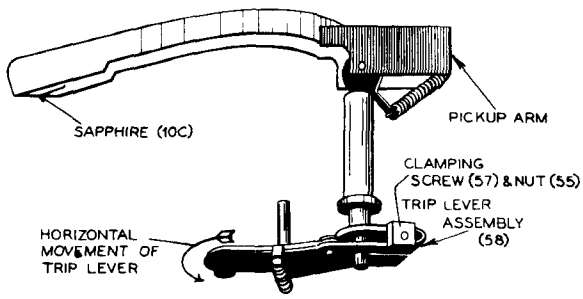

Figure 38.

3. Tripping should occur when the sapphire reaches a position $1\frac{9}{32}$" from the near side of the turntable spindle. This position is adjusted by holding the trip lever and moving the pickup arm inward or outward to obtain the specified position.
4. A convenient way of measuring this distance is to make a mark on the back side of a stroboscope disc $1\frac{9}{32}$" from the inner edge, place the disc on the turntable, with the turntable revolving, hold the disc stationary and move the pickup arm very slowly in towards the turntable spindle.
5. After this position has been obtained, tighten the clamping screw (57) and recheck the tripping position and vertical end play.

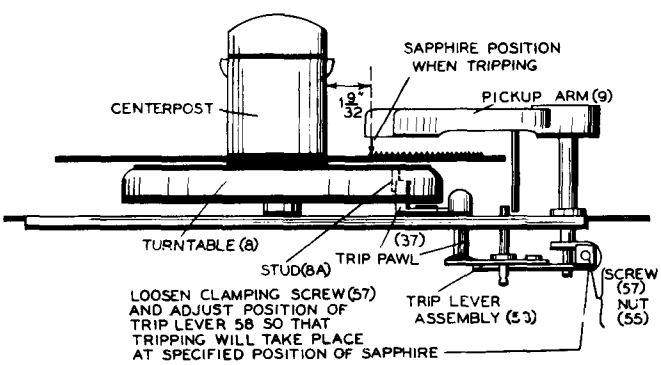

Figure 39—Tripping Position.

Landing Adjustment:

1. After the tripping adjustment has been made as described above, turn the eccentric landing adjustment stud (45C) so that the sapphire will set down on the record half-way between the outer edge and the first music groove. This position is $2\frac{5}{8}$" from the turntable spindle. The location of the adjustment stud is illustrated in Figure 42.

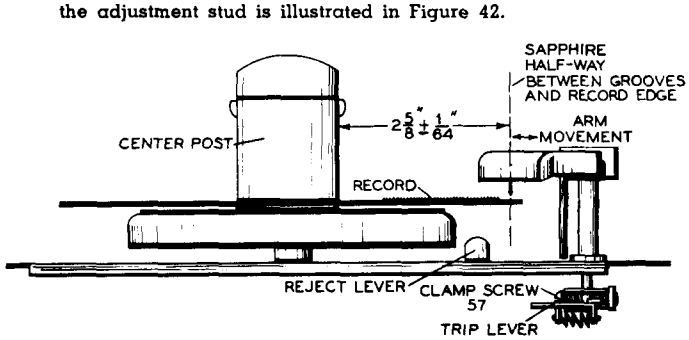

Figure 40—Landing Position.

Pickup Arm Height Adjustment (In Cycle):

Set the mechanism in cycle. Turn the turntable by hand, until the pickup arm has reached its maximum height. By means of a screwdriver turn the height adjustment stud (45D) until the distance between the top of the turntable and the sapphire point is $\frac{3}{4}$". Use that position of the eccentric stud which causes the pickup arm to rise during clockwise adjustment of the stud. The location of the adjusting stud is illustrated in Figure 42.

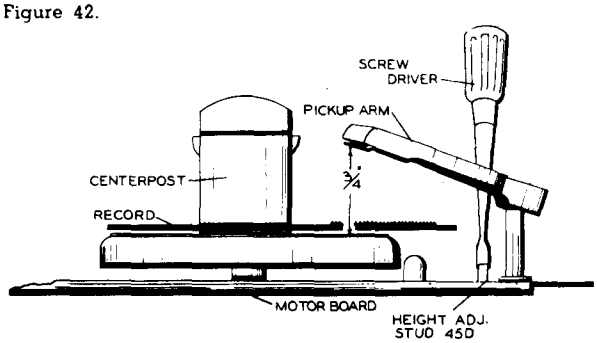

Figure 41—Height Adjustment.

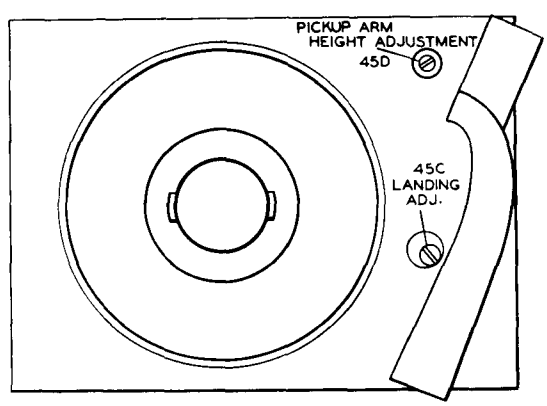

Figure 42—Height and Landing Adjustment Studs.

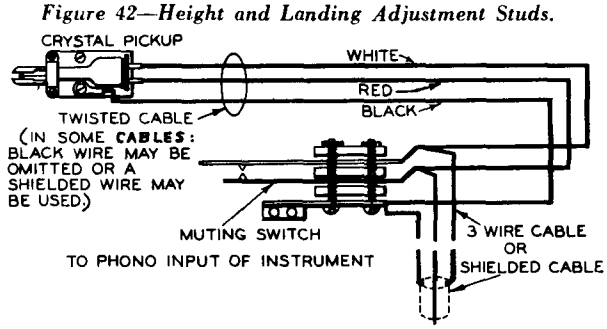

Figure 43—Pickup Muting Switch Wiring.

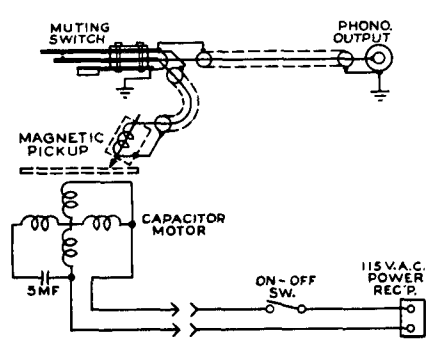

Figure 44—Schematic Diagram (Model CP-5203).

SERVICE HINTS (Continued)

REPEATS GROOVES

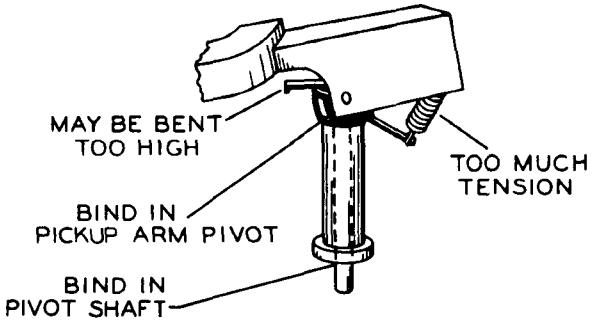

Figure 45.

FAILS TO GO INTO CYCLE

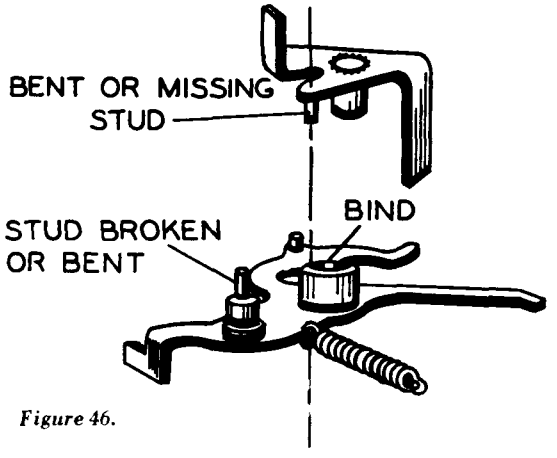

Figure 46.

Weak director lever (main lever) spring (Ill. No. 42) or excessive tension on muting switch may cause poor unlatching action and erratic pickup landing.

A drop of cement (Duco Household Cement or similar) applied to the ends of springs will prevent their becoming unhooked. Use care to prevent cementing turns of the springs.

CONTINUOUS TRIPPING

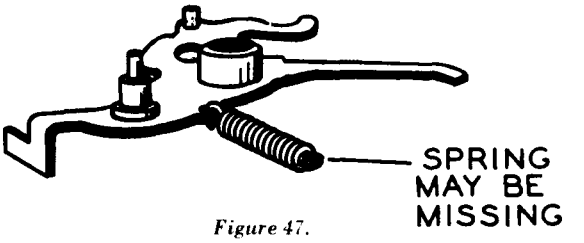

Figure 47.

RECORD DROP ON OR HIT PICKUP ARM

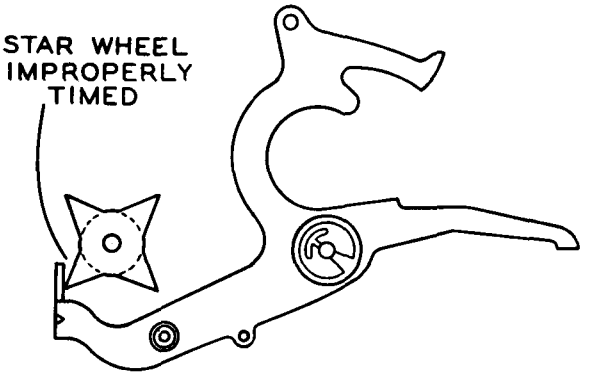

Figure 48.

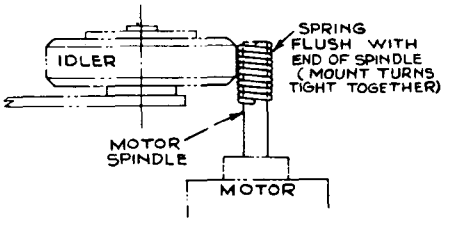

Figure 49—Spring Sleeve Installed on 60-Cycle Motor Spindle for Operation on 50-Cycle Supply.

CHANGE IN STYLUS COLOR CODE

The identification color on the bottom of the stylus holder has been changed to provide identification of a factory process.

Stylus Stock No. S-5413

Used in pickup Stock No. 74067 (RMP 128-1). Identification color may be either WHITE, BLACK or RED.

Stylus Stock No. S-5529

Used in later production pickup Stock No. 74067. Identification color may be either BLUE or GREEN.

Pickup Stock No. 74466 (RMP 130-1) uses a stylus (Stock No. 74622) which has a BLACK paint coding. It is used only with Model CP-5203.

EXTENDED PLAY "EP" RECORDS—45 RPM

A. GENERAL

The "Extended Play" records have increased playing time, which is made possible by recording to a smaller diameter. "Extended Play" records may be recorded to a minimum diameter of 4.25", or 1⅜" from the side of the centerpost of the record player.

B. RECORD CHANGER PRE-TRIPPING

The record changer arm should trip when the stylus tip is 1 9/32" from the centerpost. Record changers which are adjusted to this specification will operate correctly with "EP" records.

Changers which have been improperly adjusted, or which have been adjusted to trip earlier on standard records, may trip at a diameter greater than 4.25". The player may not, therefore, reproduce the ending passages of the modulated grooves of those records which have been recorded to the minimum diameter. When this condition occurs, a tripping adjustment is indicated.

1. RP-168 CHANGER

Assemble pickup arm and trip lever assemblies as shown. Leave clamping screw (57) loose enough to permit trip lever horizontal movement on the shaft. Turn eccentric landing adjustment stud screw to determine outward and inward adjustment limits, and then set half-way. Hold the trip lever and move pickup arm inward or outward until mechanism trips when stylus is 1 9/32" from the centerpost. Tighten clamping screw after determining correct adjustment.

C. REVIEW OF RCA VICTOR 45 RPM RECORD CHANGER TRIPPING ADJUSTMENTS.

Tripping adjustments for these record changers are shown on the other side of this sheet. Before making an adjustment, cycle and test the mechanism to determine that it is otherwise operating normally, and that an adjustment is necessary. To measure the tripping distance conveniently, the back of a strobscope disc can be marked off at 1 9/32" from the center hole, or a 4 1/16" diameter circle can be inscribed about the center hole.

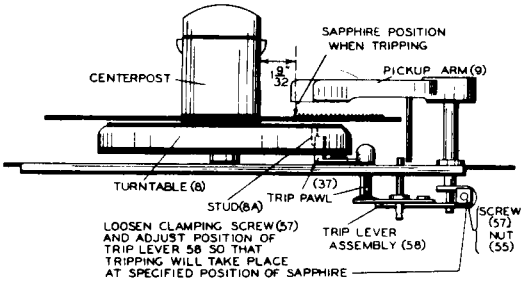

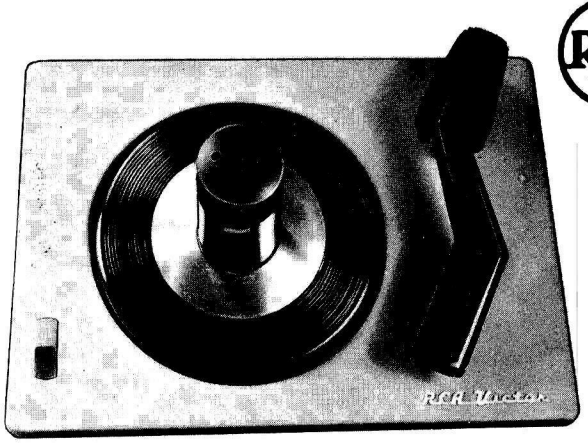

RCA VICTOR

RP-190 SERIES

45 R.P.M. AUTOMATIC RECORD CHANGER

SERVICE DATA

—1951 No. 4—

GENERAL SERVICE DIVISION
RCA VICTOR COMPANY LIMITED
MONTREAL, QUE.

MODEL IDENTIFICATION

RP-190-1 Uses pickup Stock No. 75476. (See Note in Parts List)

RP190-3 Same as RP190-1, except use 85 volt motor Stock No. 75937.

RP190-4 Same as RP190-1, except "ON-OFF" switch; however, they are physically interchangeable. Therefore, switch Stock No. 75733 is used as a replacement.

NOTE: The addition of small "a" to model number of all the above models indicates parts of different design have been added. See Page 12 for further information.

SPECIFICATIONS

Turntable speed	45 r.p.m.
Records used	RCA type seven-inch fine groove
Record capacity	12 records
Pickup force	Approx. 5 grams
Stylus tip radius	.001 inch
Power supply	105-125 volts, 60 cycle, a.c.

CAUTION

1. Avoid handling the pickup arm when the mechanism is in cycle.
2. Do not use force to release a jam.
3. Do not try to remove the records on the turntable if the turntable is stopped in cycle.
4. If the separator knives protrude from the center post when the mechanism is out of cycle, push the "start-reject" knob to reject and the condition should be corrected automatically.

AUTOMATIC OPERATION

1. Place a stack of records over the center post, with the desired selections upward, the last record to be played on top.
2. Push the "start-reject" knob to "start" (forward) and release. The mechanism will automatically play in sequence one side of each record stacked on the separator shelves.
3. To reject a record being played, push the "start-reject" knob.
4. At conclusion of playing and as the last record is being repeated, lift the pickup arm and place on its rest. Turn off the power to the drive motor by pushing back on control knob.
5. Remove the stack of records by lifting them straight up.

LUBRICATION

A light machine oil (SAE No. 10) should be used to oil the bearings of the drive motor.

On all bearing surfaces, excepting the motor bearings, Houghton STA-PUT No. 320, or equivalent, should be used. On all other sliding surfaces, STA-PUT No. 512, or equivalent, is recommended. STA-PUT can be purchased from E. F. Houghton & Co., 303 W. Lehigh Ave., Philadelphia, Pa.

(Do not oil or grease record separator shelves.)

It is important that the drive motor spindle and the rubber tire on the idler wheel be kept clean and free from oil or grease, dirt, or any foreign material at all times. Carbon tetrachloride or naphtha is satisfactory for cleaning these parts.

INDEX

	Page
Specifications	1
Cautions	1
Operation	1
Lubrication	1
Photos	2
Function of Principal Parts	3
Cycle of Operation	3-4-5
Do You Know? (Service Hints)	5-6
Service Hints	6-7-8
Adjustments	8-9
Exploded View of Mechanism	10
Service Parts List	11-12
Information on models having a model No. with small suffix "a"	12

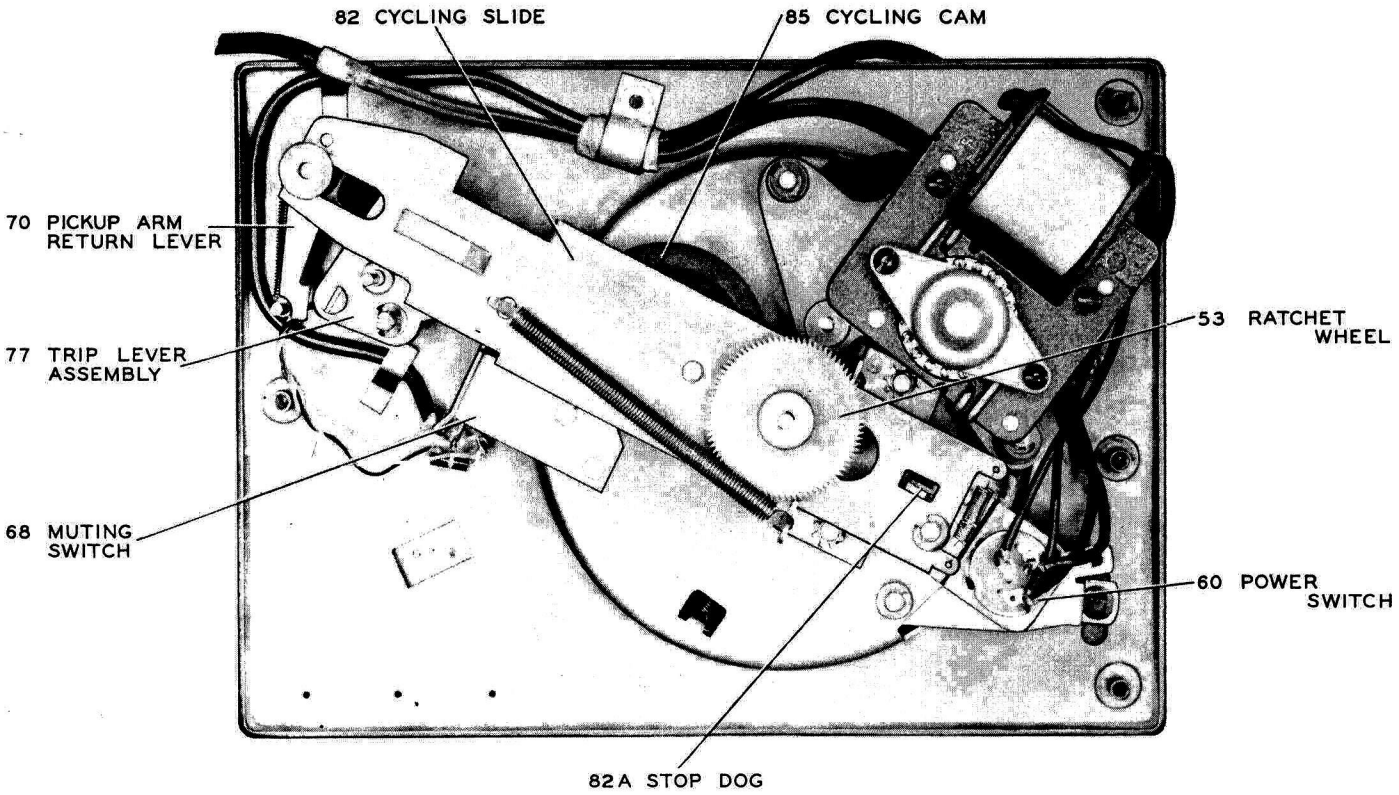
82 CYCLING SLIDE
85 CYCLING CAM
70 PICKUP ARM RETURN LEVER
77 TRIP LEVER ASSEMBLY
68 MUTING SWITCH
53 RATCHET WHEEL
60 POWER SWITCH
82A STOP DOG

Fig. 1

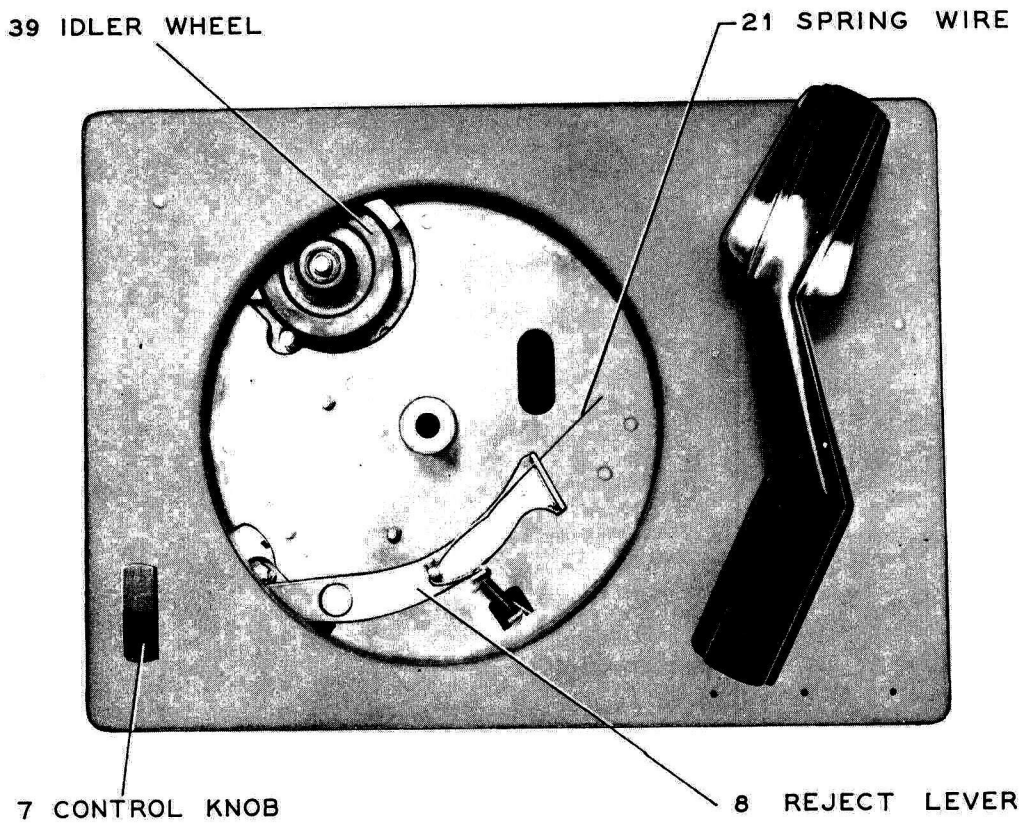
39 IDLER WHEEL
21 SPRING WIRE
7 CONTROL KNOB
8 REJECT LEVER

Fig. 2

Function of Principal Parts

Trip Lever (77)

The trip lever is mounted on the bottom end of the pickup arm vertical pivot shaft. The function is to transfer the movement of the pickup arm to parts of the operating mechanism below the motor board. The end of the trip lever contacts stud on cycling cam thereby starts tripping action.

Pickup Arm Return Lever (70)

The function of the pickup arm return lever is to provide a force necessary to push the pickup into landing position. The end of the pickup arm return lever is curved so as to provide a stop for trip lever. This stop determines landing position of the pickup.

Reject Lever (22)

The function of the reject lever is to transfer the action of the control knob to the cycling cam thereby starting a change cycle.

Muting Switch (68)

The function of the muting switch is to short the pickup leads to prevent amplifying of mechanical noise, of the merchanism during change cycle.

Cycling Cam (85)

The cycling cam is mounted on the cycling slide. The function of the cam is to transfer the rotary motion of the turntable shaft into sliding motion of the cycling slide.

Stop Dog (82A)

The stop dog is mounted on the end of cycling slide. The function of the stop dog is to engage the ratchet wheel on the separator shaft and prevent it from rotating, at the exact moment during change cycle.

Ratchet Wheel (53)

The function of the ratchet wheel located on the end of the separator shaft is to keep the separator shaft stationary at the proper time, so as to actuate the separator mechanism inside the centerpost.

Cycling Slide (82)

The cycling slide is the main connecting medium between the various moving parts.

Cycle of Operation

FUNCTION	EXPLANATION
Place a stack of records over centerpost.	1. Records rest on separator shelves protruding from either side of the centerpost.
Push control knob to reject.	1. The control first actuates the power switch applying power to the drive motor. This starts the turntable rotating. 2. Further movement of the control knob actuates the reject lever assembly (8) which contacts the stud mounted on the eccentric cycling cam and moves it slightly.
Cycling starts.	1. The slight movement of the eccentric cycling cam (85) is sufficient for engagement with the rotating knurled roller (62) mounted on turntable shaft. 2. The eccentric cycling cam which is mounted on the cycling slide (82) pushes the slide in the direction of the pickup arm pivot. In so doing tension is increased on the slide return spring (89). 3. The tab on the cycling slide moves back permitting muting switch to close.

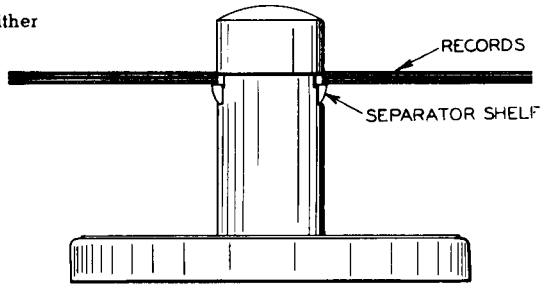

Fig. 3

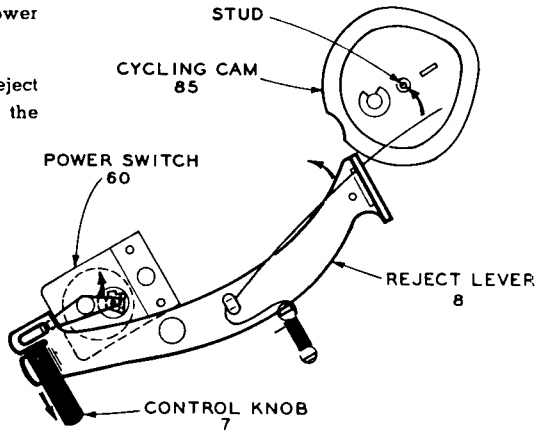

Fig. 4

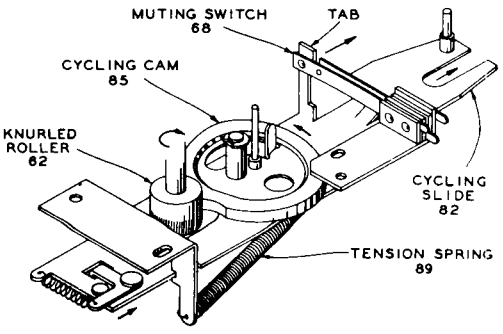

Fig. 5

Cycle of Operation—Continued

Pickup raises from the rest.

1. As the cycling slide continues to move in the direction of the pickup arm pivot the small incline pressed in the slide causes the elevating rod (74) to lift the pickup arm from the rest.
2. The raised pickup arm moves inward slightly from the inward force of the pickup arm return lever (70), until the stud on the trip lever (77) assembly comes against edge of the cycling slide.
3. The cycling slide continues to move further, which pushes the trip lever back. The eccentric landing adjustment stud (79) contacts and pushes the pickup arm return lever (70) against the tension of the return spring (69).

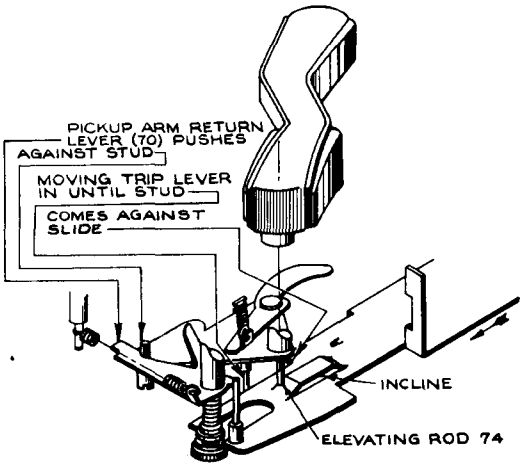

Fig. 7

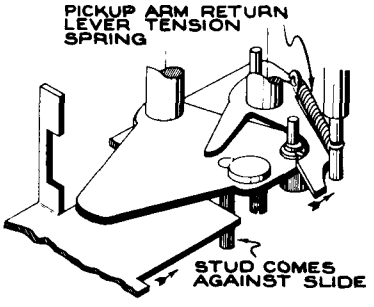

Fig. 6

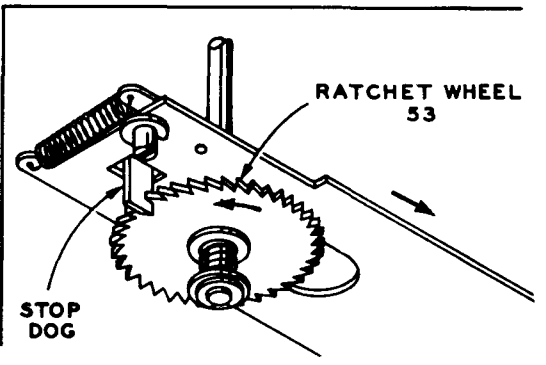

Fig. 8

Separator knives separate the lower record from the stack and the lower record drops to the turntable.

1. As the cycling slide reaches the limit in its movement in the direction of the pickup arm pivot, the stop dog mounted on the slide engages the rotating ratchet wheel (53).
2. The ratchet wheel and separator shaft (6) then remains stationary and the turntable continues to rotate.
3. The separator shelves and knives are coupled together in such a manner that the flattened end of the separator shaft pushes the knives out, which in turn pulls the opposite shelves in.
4. As the shelves recede, the separator knives mounted above the shelves move out and separate the lower record of the stack and support the remaining records while the lower record drops to the turntable.

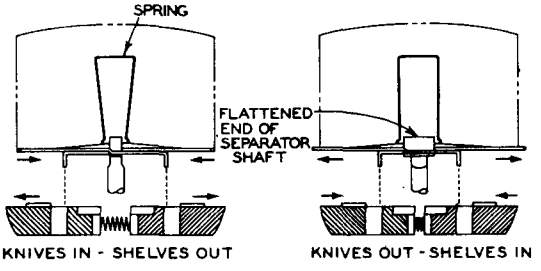

Fig. 9

Pickup moves in for landing.

1. The cycling slide moves away from the pickup arm pivot, due to the force produced by the tension spring (89) keeping the eccentric cycling cam against the rotating knurled roller (62). The knurled roller at this time is returning to the smaller diameter of the cam.
2. The stud on trip lever assembly follows the slide due to the force produced by the action of the pickup arm return lever.
3. After the slide has moved back a short distance the stud on the trip lever assembly no longer follows the slide since the landing adjustment stud comes against the curved stop on the end of the pickup arm return lever. At this moment the pickup is directly above the point of landing.
4. As the cycling slide completes the return movement the elevating rod slides down the incline which lowers the stylus on the record.

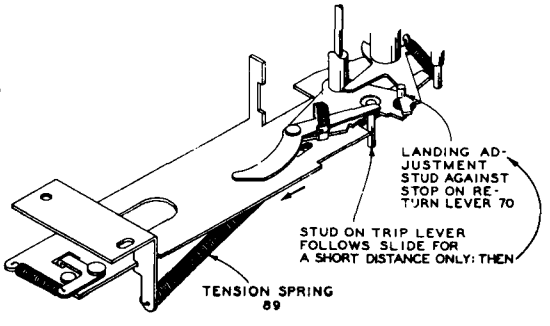

Fig. 10

Cycle completed and the record plays.

1. The tab on the cycling slide contacts and opens the muting switch.
2. The stud on the cycling slide pushes pickup arm return lever back to permit free motion of the pickup arm.
3. The change cycle is completed as the cycling slide comes against the stop bracket, at which time the knurled roller rotates in the cut away section of the cam.
4. As the record plays and the pickup arm moves inward.
5. When the stylus reaches the end of the selection the end of the trip lever contacts the stud on the cycling cam and pushes it slightly.
6. The slight movement of the cycling cam causes engagement with the rotating knurled roller, thereby starting a change cycle.
7. The mechanism repeats the preceding sequence of operations until the last record of the stack has dropped and has been played. This selection will be repeated until the pickup is lifted and placed on the rest.

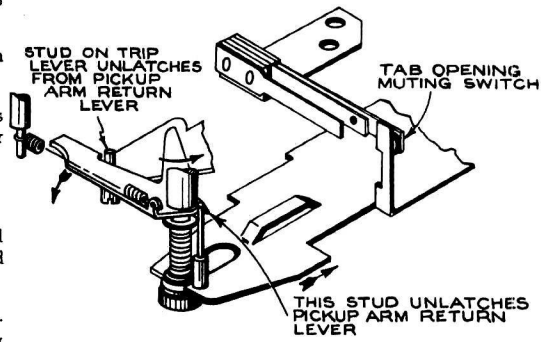

Fig. 11

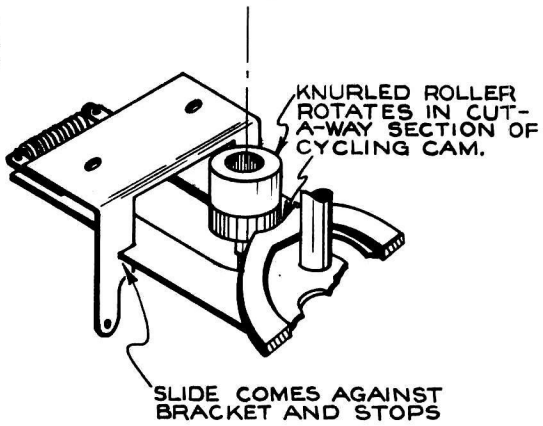

Fig. 12

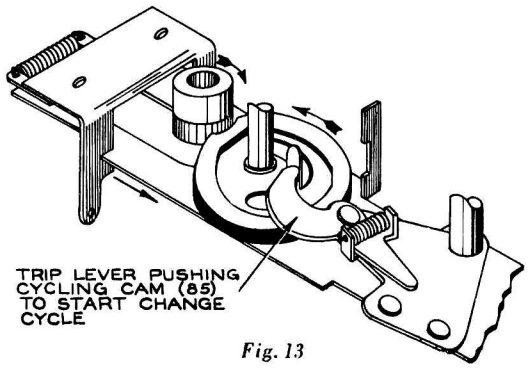

Fig. 13

DO YOU KNOW?

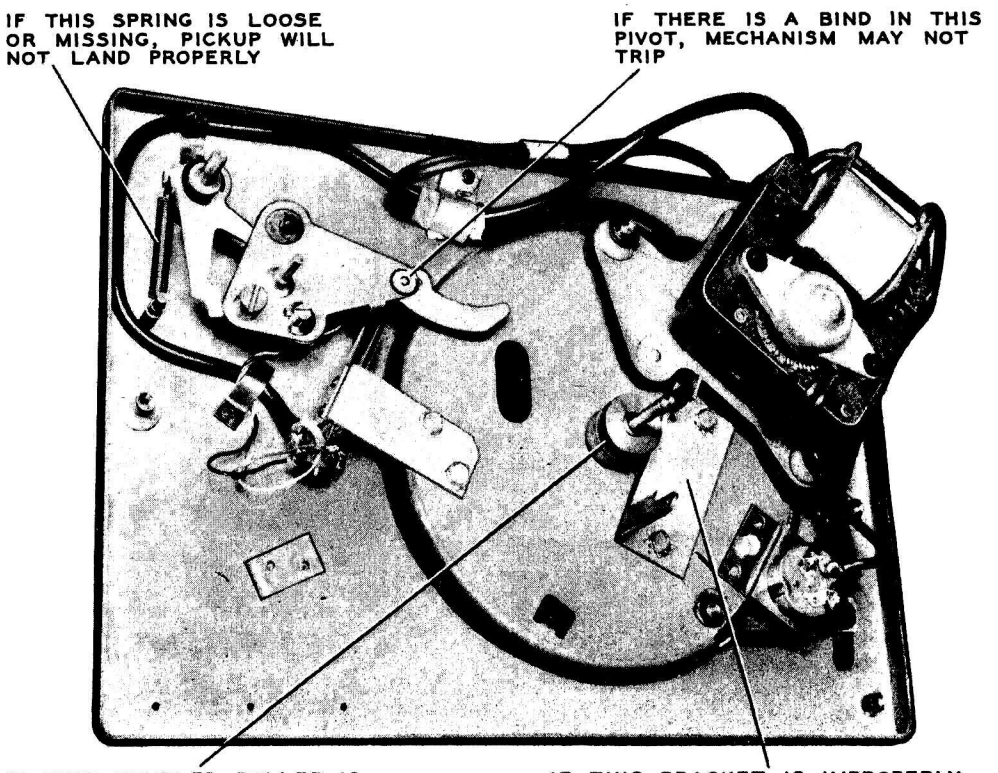

Fig. 14

DO YOU KNOW?—Continued

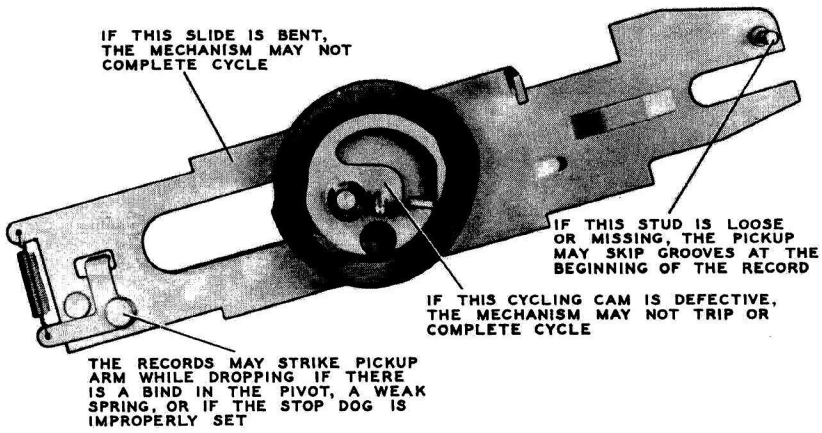

Fig. 15

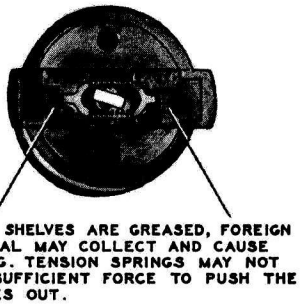

Fig. 16

SERVICE HINTS

REJECT CONTROL FAILS TO OPERATE

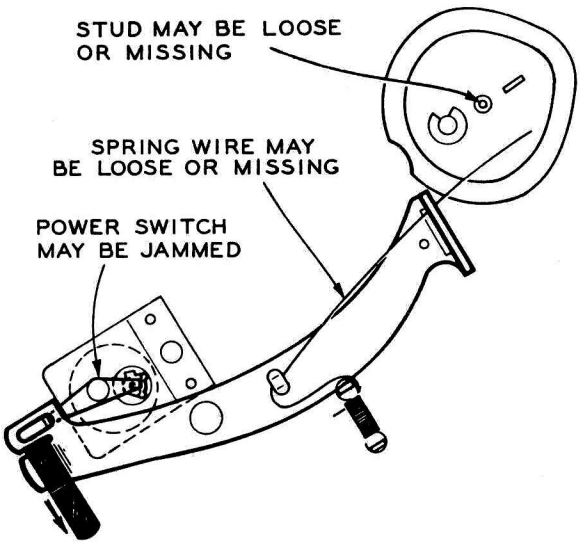

Fig. 17

RECORD STRIKES PICKUP ARM WHEN DROPPING

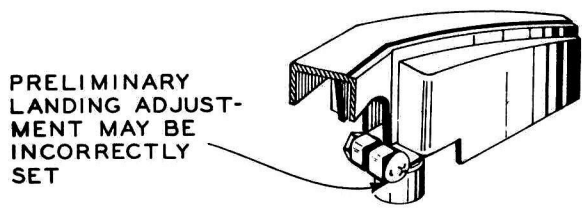

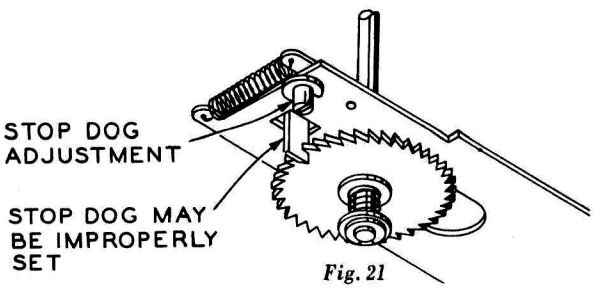

Fig. 21

MECHANISM FAILS TO SEPARATE RECORDS PROPERLY

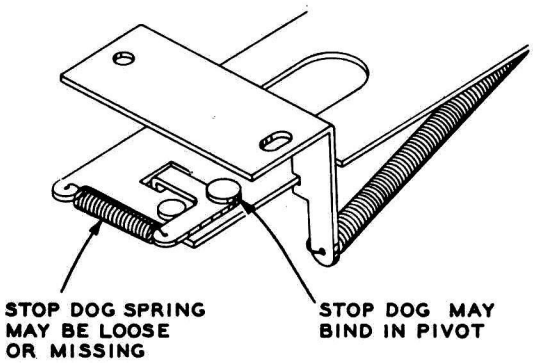

Fig. 18

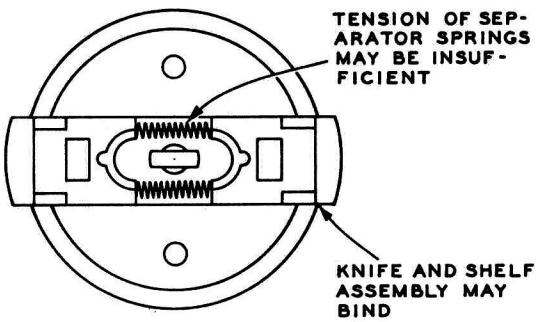

Fig. 19

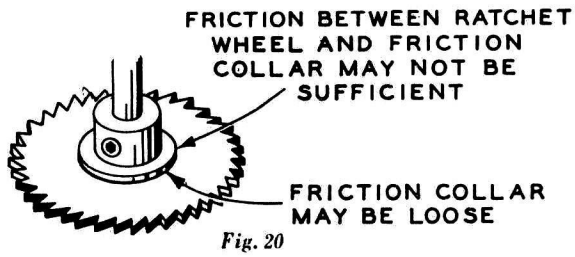

Fig. 20

PICKUP FAILS TO LAND PROPERLY

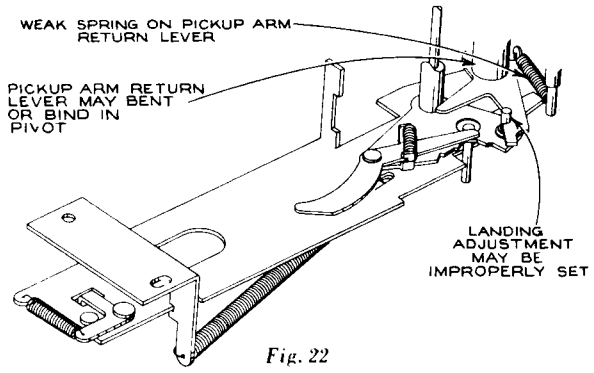

Fig. 22

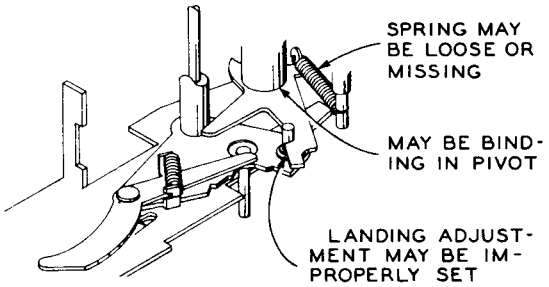

Fig. 23

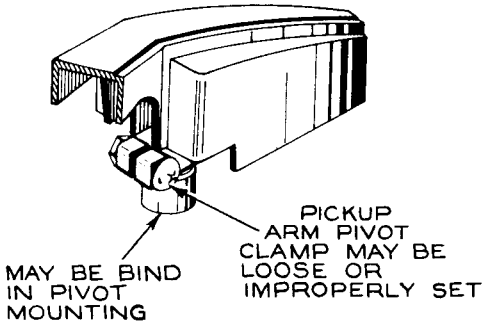

Fig. 24

DISTORTED OR NO OUTPUT

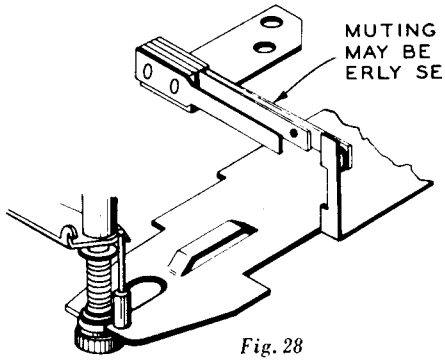

Fig. 28

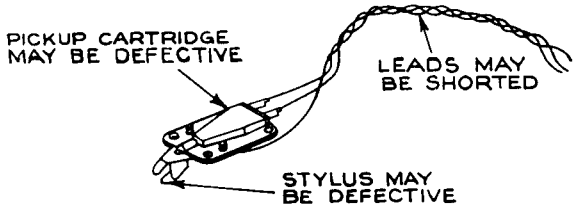

Fig. 29

PICKUP SKIPS GROOVES

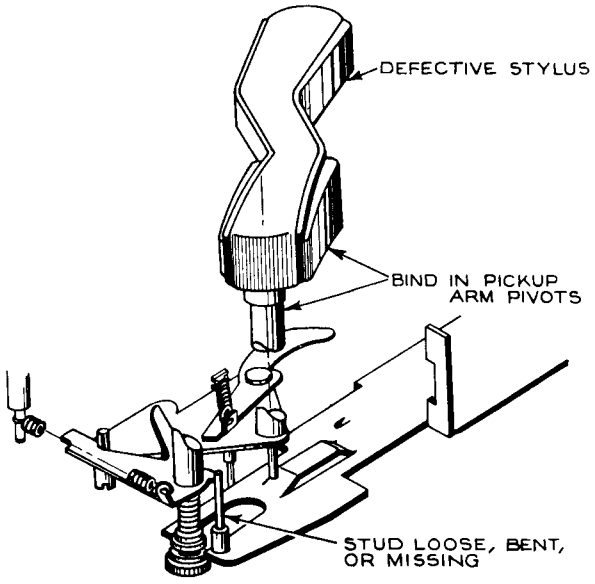

Fig. 25

MECHANISM FAILS TO TRIP

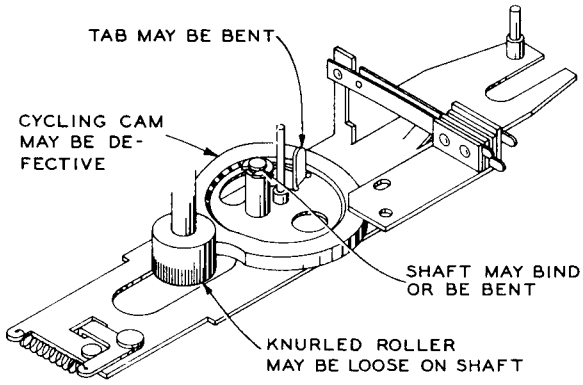

Fig. 26

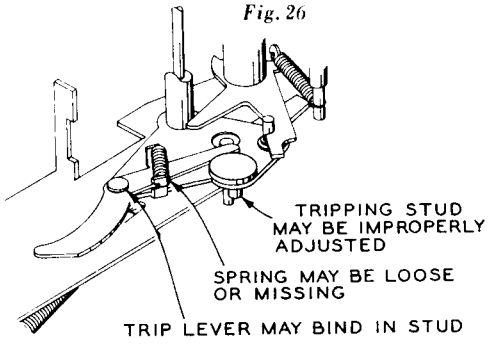

Fig. 27

PREMATURE TRIPPING

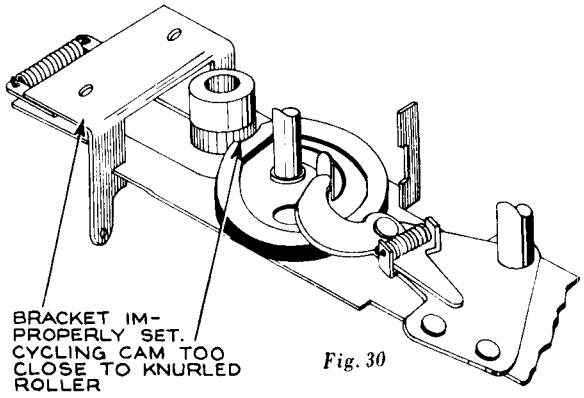

Fig. 30

"WOW" OR SPEED VARIATION

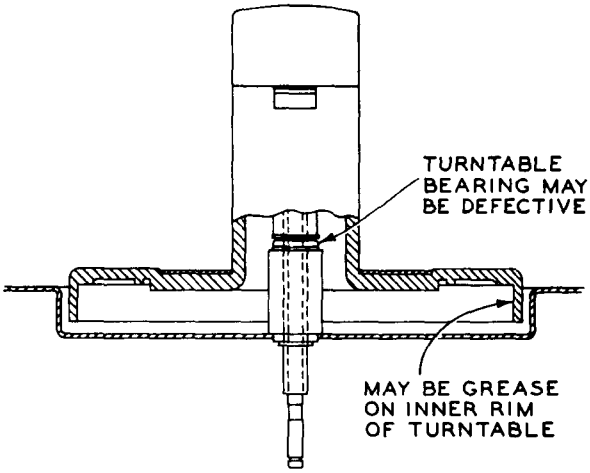

Fig. 31

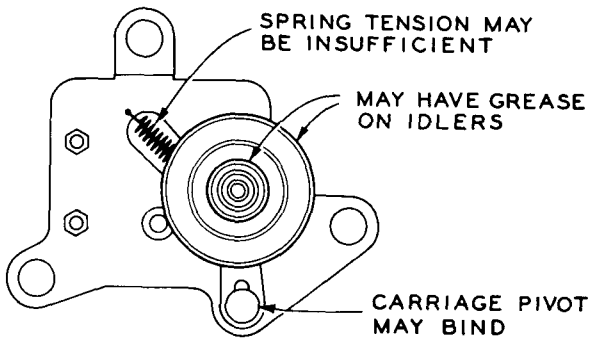

Fig. 32

CONTINUOUS TRIPPING

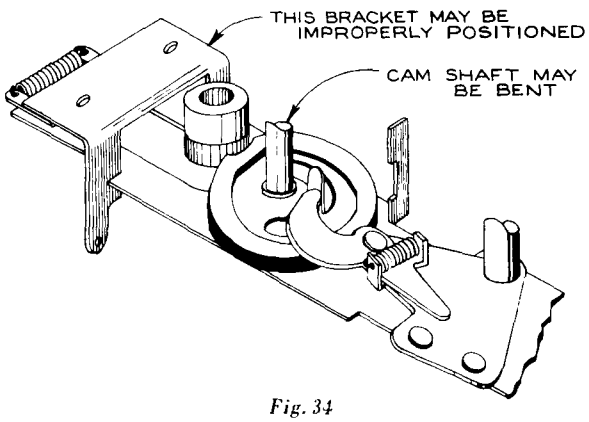

Fig. 34

RUMBLE

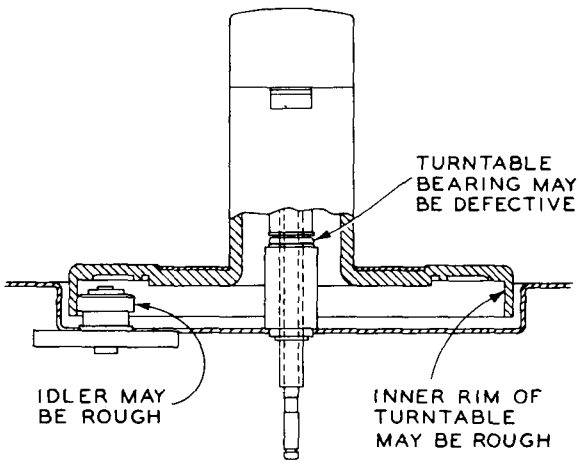

Fig. 33

MECHANISM FAILS TO COMPLETE CYCLE

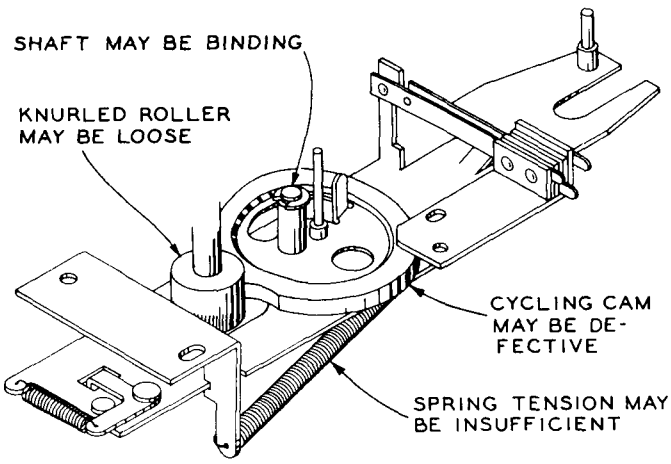

Fig. 35

ADJUSTMENTS

LANDING

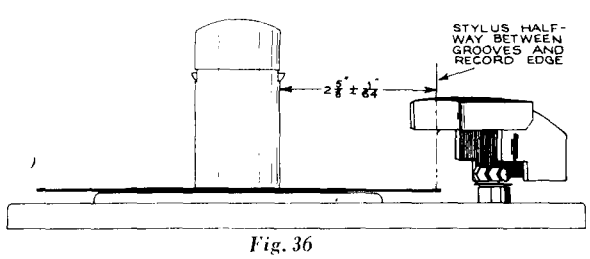

Fig. 36

TRIPPING

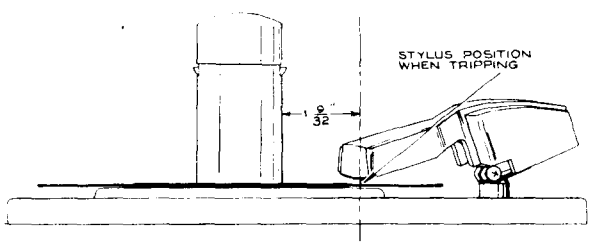

Fig. 37

ADJUSTMENTS (Continued)

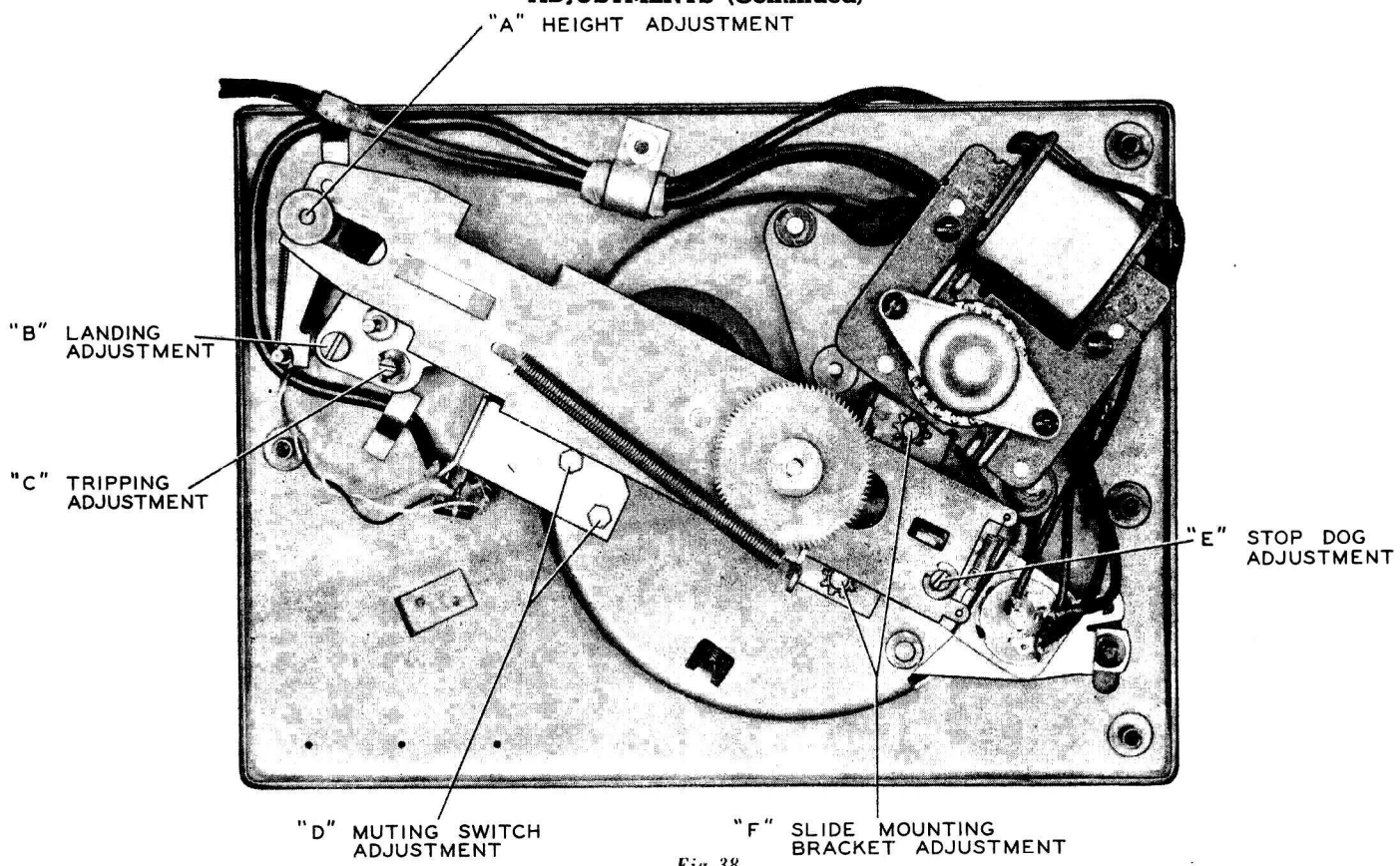

Fig. 38

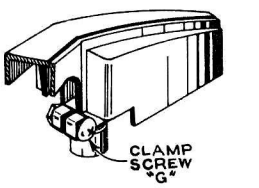

Fig. 39

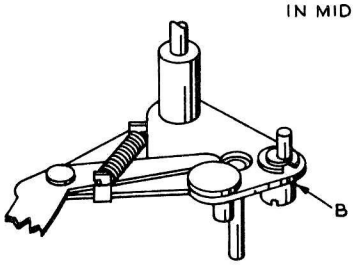

Fig. 40

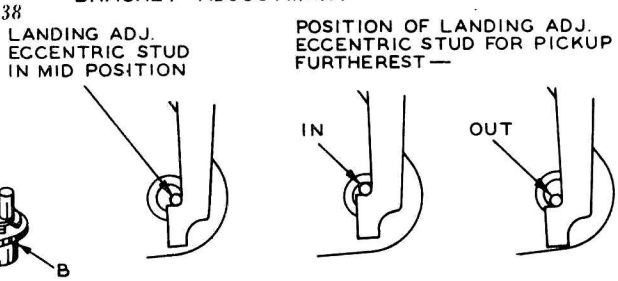

Fig. 41

Adjustments

Pickup Landing Adjustment:

Under ordinary conditions the landing adjustment is a screwdriver adjustment as shown. The adjustment of eccentric landing adjustment stud (B) gives approximately a ¼" movement. (See Figs. 38, 40.)

If, however, the pickup arm has been removed it is first necessary to make an approximate landing adjustment as follows:

1. With the mechanism out of cycle and the clamp screw (G) (Fig. 39) loose, place pickup arm on the rest and tighten clamp screw enough to prevent the clamp from slipping on the shaft.
2. Set the landing adjustment stud (B) as shown (mid-adjustment). (See Figs. 40, 41.)
3. With the power removed, push reject control to reject. Rotate turntable by hand in the correct direction until the pickup is about ready to land.
4. Loosen clamp screw (G) and move pickup arm so the stylus is approximately 2 5/8" from side of centerpost. Tighten clamp screw. (See Figs. 36, 39.)
5. Exact landing adjustment can now be made by a screwdriver on stud (B). (See Fig. 38.)

Pickup Height Adjustment (See Fig. 38):

Adjust knurled nut (A) until the distance (during change cycle) between the top of the turntable and the stylus point is approximately 1 1/8".

NOTE: If unable to adjust for sufficient height, it may be necessary to cut a few turns from the compression spring to allow more space on the shaft.

Tripping Adjustment (See Figs. 37, 38):

Adjust the eccentric tripping stud (C) until the mechanism trips when the stylus is 1 9/32" from the side of the centerpost.

Mounting Bracket Adjustment (See Fig. 38):

Loosen the two screws (F) and move the bracket so it is as near perpendicular to the slide as possible. Move back or forward until the cut away section of the cycling cam clears the knurled roller approximately 1/16". Tighten screws.

Muting Switch Adjustment (See Fig. 38):

Loosen the two screws (D) and adjust the position of the switch so the contacts are approximately 1/32 to 1/16 inches apart when the mechanism is out of cycle. If the mounting screws do not give sufficient adjustment, bend tab on slide slightly.

Stop Dog Adjustment (See Fig. 38):

Turn the eccentric screw (E) until the record drops to the turntable without striking the pickup arm.

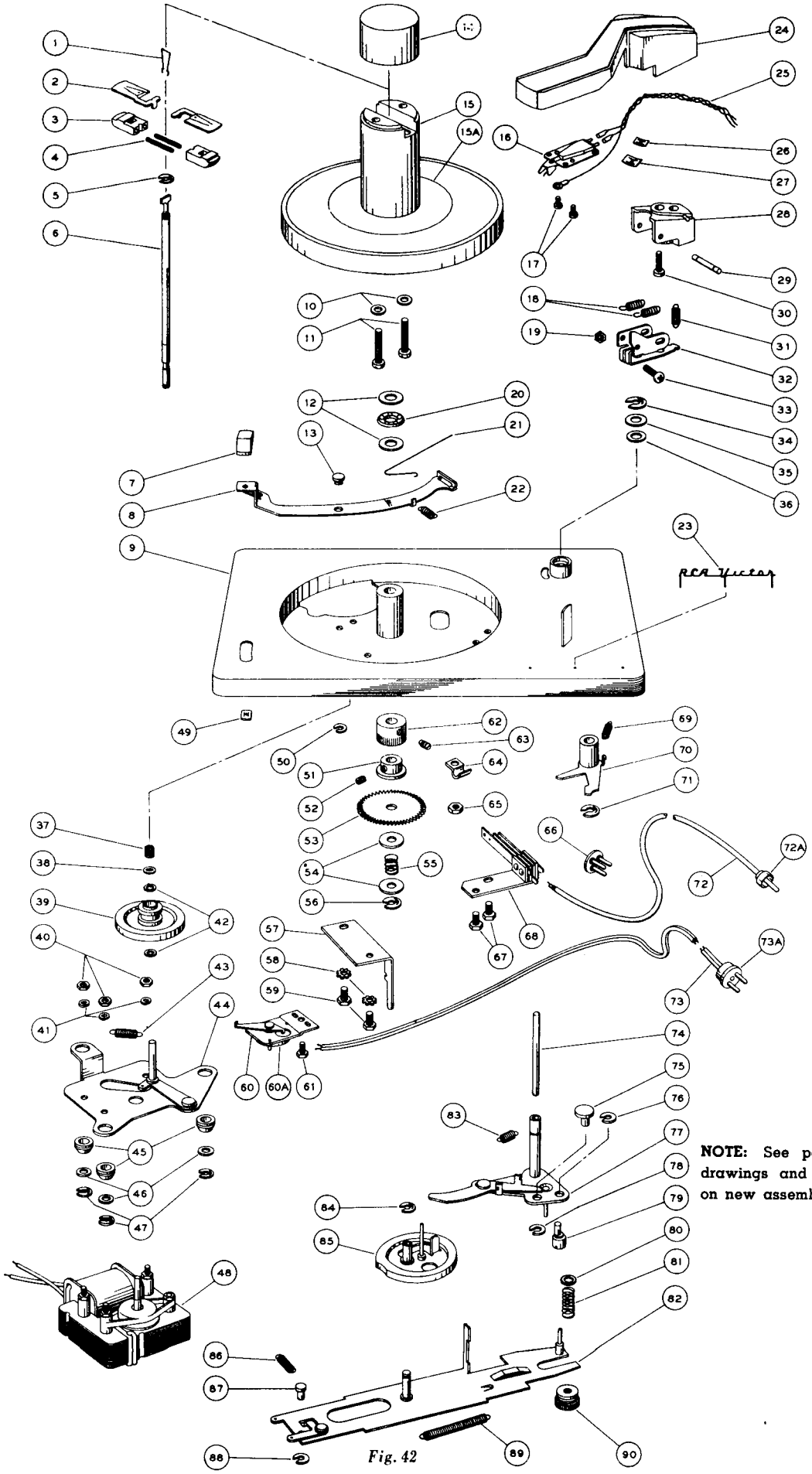

Fig. 42

NOTE: See page 12 for drawings and information on new assemblies.

STOCK No.	ILL. No.	DESCRIPTION
		RP190-1, RP190-2
74862	1	Spring—Spindle nose spring—formed
74864	2	Separator—Separator knife
74865	3	Shelf—Separator shelf
75756	4	Spring—Separator shelf return spring (.118" O.D. x 3/4" — 16 turns)
33726	5	Washer—"C" washer to hold separator shaft and cam
75757	6	Shaft—Separator shaft with cam
75741	7	Knob—Control knob
75739	8	Lever—Reject lever complete with formed spring
75729	9	Board—Motorboard sub-assembly complete with welded and/or staked studs and rest
74869	10	Washer—No. 6 flat washer for under head of screws No. 75758
75758	11	Screw—No. 6-32 x 1" fillister head machine screw (holds nose to spindle)
74080	12	Washer—Thrust bearing washer
75748	13	Stud—Reject lever mounting stud
75755	14	Cap—Spindle nose cap—red
75753	15	Turntable—Turntable and shaft assembly complete with finished disc
75754	15A	Disc—Finished disc for turntable — part of No. 75753
74067	16	Crystal—Crystal cartridge complete with stylus
74069	16A	Guard—Stylus guard for 74067
74065	16B	Screw—No. 2-56 x 3/16" fillister head screw to mount guard
S-5529	16C	Stylus-Replacement Stylus for 74067
74065	17	Screw—No. 2-56 x 3/16" fillister head screw to mount crystal
*75727	18	Spring—Shock absorbing spring (.187" O.D. x 3/4") (see note)
*75725	19	Nut—No. 8-32 hex nut to mount pickup arm (see note)
72349	20	Bearing—Thrust bearing
75740	21	Spring—Reject lever spring (formed), part of reject lever
75742	22	Spring—Reject lever return spring (.180" O.D. x .535" — 21½ turns)
74782	23	Emblem—"RCA Victor" emblem
*75719	24	Arm—Pickup arm shell only (see note)
*76098	24	Arm—Pickup arm shell complete with counterbalance swivel and pin less crystal and cable (see note)
75728	25	Cable—3 wire twisted pickup arm cable complete with connectors
71095	26	Nut—Speed nut for cable—in rear of arm
72765	27	Nut—Speed nut for cable—in center of arm
*75721	28	Weight—Counterbalance weight—die cast (see note)
*75724	29	Pin—Pin for anchoring shock absorbing springs (see note)
*75723	30	Screw—No. 6 x 11/16" fillister head screw to fasten counterbalance (see note)
75886	31	Spring—Counterbalance spring (.180" O.D. x .600" — 30 turns) (same for all instruments)
*75720	32	Swivel—Pickup arm swivel (see note)
*75726	33	Screw—No. 8-32 x 5/8" cross recessed pan head machine screw to mount pickup arm (see note)
35969	34	Washer—"C" washer to mount trip lever
75752	35	Washer—Steel thrust washer
76005	36	Washer—Bearing washer for tone arm
74870	37	Retainer—Idler wheel retainer (spring sleeve type)
75887	38	Washer—Spring washer for idler wheel
74077	39	Wheel—Idler wheel
-----	40	Nut—No. 6-32 hex nut for mounting motor to idler lever plate assembly
-----	41	Lockwasher—No. 6 split lockwasher for No. 6-32 hex nut
74078	42	Washer—Dampening washer for idler wheel
75762	43	Spring—Idler wheel tension spring (.195" O.D. x 29/32" — 37½ turns)
75759	44	Plate—Motor mounting plate complete with idler lever
75761	45	Grommet—Rubber grommet for motor mounting plate
75749	46	Washer—Flat washer—metal (.0299" x .190" I.D. x 3/8" O.D.)—for mounting motor
33726	47	Washer—"C" washer to mount motor assembly
75760	48	Motor—117 volt, 60 cycle motor
75937	48	Motor—80 volt, 60 cycle motor for RP190-3 (used on some 45EY3 instruments) (see instrument label)
74212	49	Nut—Control knob speed nut
74431	50	Washer—Spring washer to mount reject lever mounting stud
75736	51	Collar—Friction collar
14974	52	Screw—No. 8-32 x 3/16" hex socket head—cup point—for friction collar
75738	53	Wheel—Ratchet wheel
75750	54	Washer—Flat washer—metal (.0299" x .180" I.D. x 9/16" O.D.) — for ratchet wheel, thrust spring
75743	55	Spring—Ratchet wheel thrust spring (5/16" O.D. x 7/16" — 5½ turns)
33726	56	Washer—"C" washer to mount ratchet wheel
75735	57	Bracket—Mounting bracket for slide assembly

* See note, page 12.

STOCK No.	ILL. No.	DESCRIPTION
——	58	Lockwasher—No. 8 external teeth lockwasher for cycling slide mounting bracket
74670	59	Screw—No. 8 x 3/8" self-tapping hex head screw to mount slide assembly bracket
75732	60	Housing—"On-Off" switch housing and lever less switch
75733	60A	Switch—"On-Off" switch
——	61	Screw—No. 8 x 1/4" self-tapping hex head screw to mount "On-Off" switch
75737	62	Roller—Knurled roller
75751	63	Screw—No. 10-32 x 17/64" headless set screw—dog point—for knurled roller
——	64	Clamp—Cable clamp for audio cable
——	65	Nut—No. 8-32 hex nut to fasten cable clamp ILL. 64
74192	66	Connector—3 contact male connector for audio cable
——	67	Same as 61
75730	68	Switch—Muting switch
76004	69	Spring—Pickup arm return lever spring (.195" O.D. x 1 1/4" — 69 turns)
75734	70	Lever—Return lever
35969	71	Washer—"C" washer to mount return lever
——	72	Cable—Shielded audio cable (see Service Data for various instruments)
31048	72A	Plug—Pin plug for audio cable
——	73	Power cord (see Service Data for various instruments)
30870	73A	Connector—2 contact male connector for power cable
75731	74	Rod—Elevating rod
75768	75	Stud—Tripping adjustment stud
74431	76	Washer—Spring washer for adjusting studs
75767	77	Lever—Trip lever assembly less spring and tripping and landing adjustment studs
74431	78	Washer—Spring washer for adjusting studs
75769	79	Stud—Landing adjustment stud
75749	80	Washer—Flat washer—metal (.0299" x .190" I.D. x 3/8" O.D.)—to mount sub-motorboard
75746	81	Spring—Height adjustment spring (.262" O.D. x 13/16" — 8 turns)
*75763	82	Slide—Cycling slide assembly complete with stop dog less cam wheel and stop dog adjusting stud (see note)
75742	83	Spring—Trip lever spring (.180" O.D. x .535" — 21 1/2 turns)
33726	84	Washer—"C" washer for cam wheel
75764	85	Wheel—Cam wheel and tire
75765	86	Spring—Stop dog tension spring (.195" O.D. x 11/16" — 24 1/2 turns)
75766	87	Stud—Adjusting stud for stop dog
74431	88	Washer—Spring washer for stop dog adjusting stud
75744	89	Spring—Slide assembly return spring (1/4" O.D. x 2 23/32" — 90 turns)
75747	90	Nut—Knurled nut for height adjustment

APPLY TO YOUR RCA DISTRIBUTOR FOR PRICES OF REPLACEMENT PARTS

*The original production of Model RP190 record changer is provided with two safety springs located in the rear portion of the pickup arm. The purpose of these springs is to provide a limited amount of movement of the pickup arm during change cycle and continue to maintain the correct landing position.

In later production of the RP190 the same protection is maintained by the removal of the springs in the pickup arm and adding a spring and lever to the cycling slide.

The models incorporating the change are identified by the addition of a small letter (a) to the model number. For example: RP190-1a, etc.

The cycling slide stock number 76101 having the safety spring and lever can be used on either model.

The pickup arm and swivel assembly stock number 76038 has the swivel and counterbalance weight assembly cemented in the pickup arm shell. This makes it necessary to replace the entire assembly of arm, swivel, counterbalance weight (stock number 76098), collar (stock number 76099) and screw (stock number 76100) as a unit. This assembly should be used only in models marked with a small (a) or on models where the safety slide has been changed to the new type slide stock number 76101.

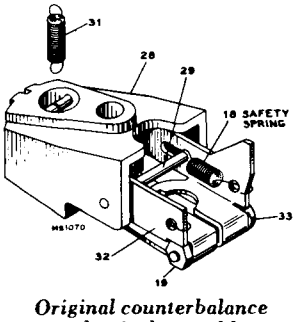

Original counterbalance and swivel assembly

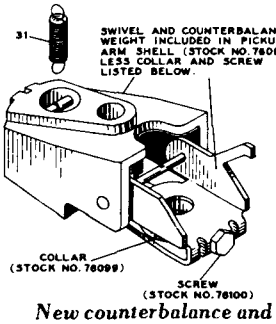

New counterbalance and swivel assembly part of pickup arm

NOTE: The original crystal cartridge as supplied with the instrument uses a non-replaceable needle. The replacement cartridge 74067 is the standard 45 RPM cartridge and the replacement needle is S-5529.

Parts Identification for Mechanism Having Small (a) Following Model Number

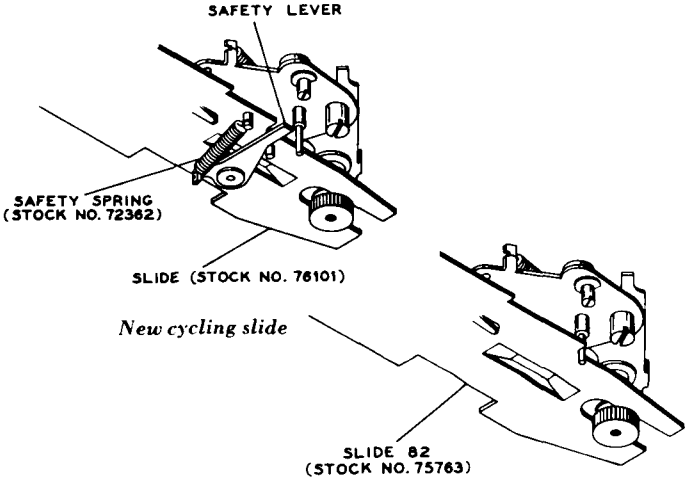

New cycling slide

Original cycling slide



RCA VICTOR

AUTOMATIC RECORD CHANGER

MODEL RP-200

(960282-1)

SERVICE DATA

—1950 No. 13—

GENERAL SERVICE DIVISION
RCA VICTOR COMPANY LIMITED
MONTREAL, QUE.

FEATURES

1. This record changer is a center support, drop type, two speed (78-33⅓ rpm) mechanism, designed to play automatically a series of twelve ten-inch, or ten twelve inch records of the standard 78 rpm type or of the long playing 33⅓ rpm type.
2. The mechanism is equipped with a light weight, dual stylus crystal cartridge.
3. The automatic tripping device is of the acceleration type.
4. The two speeds of 78 or 33⅓ rpm are controlled by a single knob.
5. The stylus selection is accomplished by a single knob.

AUTOMATIC OPERATION

1. Lift the record stabilizing clamp.
2. Place a stack of records, ten inch if desired; over the center post leaving the edge of the stack resting on the ten-inch support.
   When playing a stack of twelve-inch records, raise both the stabilizing clamp and the ten-inch record support before placing the stack over the center post. The twelve inch records will rest on the main support.
3. Lower the stabilizing clamp on the stack of records.
4. Turn the speed selector control for the proper speed.
5. Select the proper stylus by turning the knob at the front end of the pickup arm.

NOTE: The speed selector and the stylus selector controls must indicate the same when selecting for a certain type of record.

6. Turn the control knob in the right hand end of the motorboard to "reject" and release.
   The mechanism will play one side of each record in the stack automatically. It will continue to repeat the last record of the stack until the pickup is raised from the record and placed on the rest.
7. To reject a record being played, turn the control knob to reject and release.
8. To remove records, place pickup arm on the rest, turn control knob to "off," raise stabilizing clamp and lift the entire stack.

NOTE: The pickup arm should only be handled when the control is in the manual position or before the pickup has played approximately ⅓ the distance in, if playing automatically. The pickup arm can also be handled when the mechanism is stopped if it feels free to move.

MANUAL OPERATION

1. Raise both the stabilizing clamps and the ten-inch support shelf.
2. Place either a ten or twelve inch record on turntable.
3. Select the proper speed and stylus.
4. Turn control knob to manual.
5. Place pickup on start of the record.
6. When selection is completed, lift pickup arm and place it on the rest.
7. Turn control knob to "off".
8. Lift record straight up to remove.

HELPFUL SUGGESTIONS

Before servicing the mechanism, inspect the assembly to determine whether all levers, springs and parts are in place and not jammed or bent.

1. Never use force to start or stop the turntable or any part of the mechanism.
2. (a) If for any reason the mechanism becomes jammed, it may be released by pulling both the spiral engagement stud and the cycling carriage return stud downward. Then move the cycling carriage in a clockwise direction (viewed from the bottom).
   (b) If the two studs cannot be pulled down try to remove the turntable by lifting straight up.
3. Cracked or badly chipped records may damage the stylus.
4. Do not leave records on the mechanism for an extended period of time as a guard against warpage.

LUBRICATION

The motor bearings and all pivot bearings excepting the pickup arm pivot use Singer sewing machine oil or a good grade of #10 machine oil.

The pickup arm and the trip lever bearings are riding on ball bearings which should be packed sparingly with light grease, preferably STA-PUT #512. Use STA-PUT #512 or equivalent grease on the edges of all cams and pivots or sliding contacts including the spiral track and engagement stud.

NOTE: Do not oil friction clutch or trip arm 65C, spring steel wedge on end of cycling carriage 69 or friction brake 88.

NOTE: Keep oil and grease from all rubber parts of the mechanism.

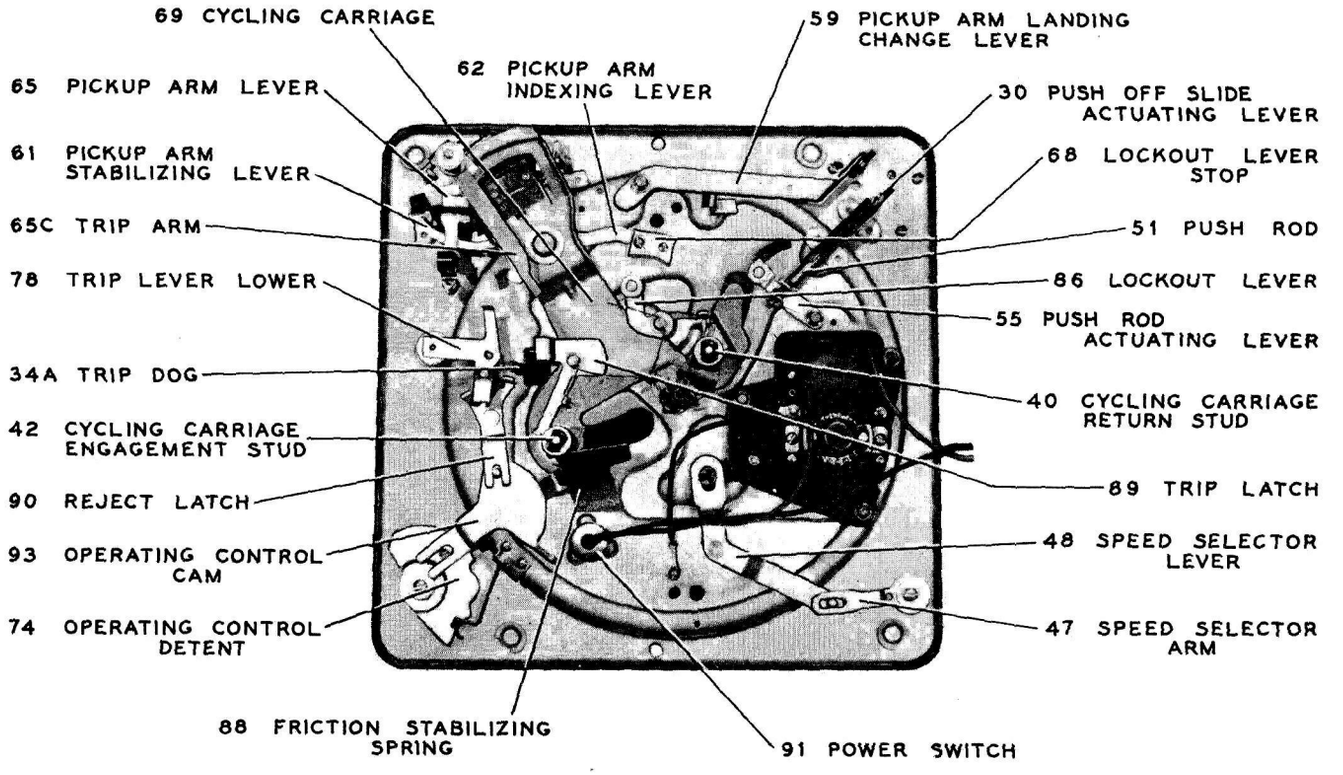

FUNCTIONS OF PRINCIPAL LEVERS

Push-off slide actuating lever 30

The actuating lever located inside the support post extends through the motorboard. The function is to transfer the movement of the push rod 51 to the 10 and 12 inch push-off slides.

Push-off slides 5, 10

The function of the slide is to push the records off the step in the center post.

Cycling Carriage 69

The cycling carriage forms the main tie link between the various levers. When the mechanism is tripped the cycling carriage engagement stud 42 raises and engages the cycling spiral channel located on the underside of the turntable. This engagement causes the cycling carriage to rotate about its pivot in a counterclockwise direction (Viewed from the bottom). The movement of the carriage continues in the same direction until the inclined portion of the spiral channel pushes the stud down to engage the latch (89). The next instant the cycling carriage return stud (40) becomes unlatched after which it raises and engages the spiral channel which returns the cycling carriage to the normal out of cycle position.

Cycling Carriage engagement Stud 42

The engagement stud forms a link between the cycling carriage and the cycling spiral on the under side of the turntable. This stud causes the cycling carriage to rotate in a counterclockwise direction (viewed from the bottom of the motorboard).

Cycling Carriage Return Stud 40

The return stud forms a link between the cycling carriage and the cycling spiral. This causes the cycling carriage to return to the normal out of cycle position.

Push Rod 51

The push rod forms a link between the push rod actuating lever (55) and the push off slide actuating lever (30).

Elevating Rod 19

The elevating rod functions as a lift for the pickup arm.

Push rod actuating lever 55

Push rod actuating lever is a tie link between the push rod (51) and the cycling carriage (69). It also is provided with an adjustment to govern the travel of the push-off slides 5 and 10.

Friction stabilizing spring 88

This spring forms a wedge which holds the cycling carriage (69) from drifting when the mechanism is in the playing position. In its braking action it provides a means of slowing the movement of the pickup to provide a gentle landing.

Trip lever (upper) 34

As the pickup arm travels towards the center of the record, the trip lever is carried along by the inter-connecting levers. A small offset located on the turntable shaft rotating with the turntable contacts the end of the trip lever once with each revolution. On each contact the trip lever is pushed back slightly. This slight backward movement continues as long as the pickup is moving at a constant rate of speed. When the pickup enters the eccentric groove of the record, the movement is accelerated and thus allows the trip dog (34A) to drop off the edge of the trip latch (89) before the turntable has made a revolution, therefore, the small offset on the turntable strikes the trip lever and in so doing, moves trip latch (89) and starts change cycle.

Trip Lever (lower) 78

The lower trip lever mechanically linked to the upper trip lever (34) transfers the action from the underside of the motorboard to the top of the motorboard.

Pickup Arm Landing Change Lever 59

The pickup arm landing change lever functions as a stop for the pickup indexing lever (62). The change lever position is altered depending upon the position of the 10 inch record support 4.

Pickup Arm Indexing Lever 62

The pickup arm lever engages one of the notches in the indexing lever and in so doing determines the landing position of the pickup.

Pickup arm lever 65

The pickup arm lever is connected to the pickup arm through the pickup arm pivot (20). The inward motion of the pickup arm causes the tripping action as a result of the contact between the pickup arm lever and the lower trip lever.

Pickup Arm Stabilizing Lever 61

The pickup arm stabilizing lever is actuated by a small tab on the cycling carriage during the change cycle. The forward movement of this stabilizing lever permits contact with the stud (65A) on the pickup arm lever, thereby stabilizing the pickup arm during the change cycle of the mechanism.

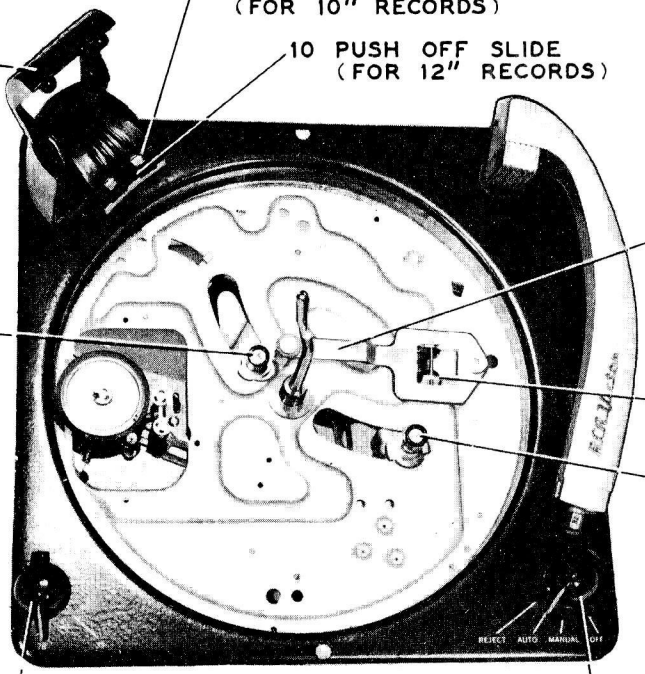
5 PUSH OFF SLIDE (FOR 10" RECORDS)
2 STABILIZING CLAMP
10 PUSH OFF SLIDE (FOR 12" RECORDS)
34 TRIP LEVER UPPER
40 CYCLING CARRIAGE RETURN STUD
34A TRIP DOG
42 CYCLING CARRIAGE ENGAGEMENT STUD
SPEED CONTROL
OPERATING CONTROL

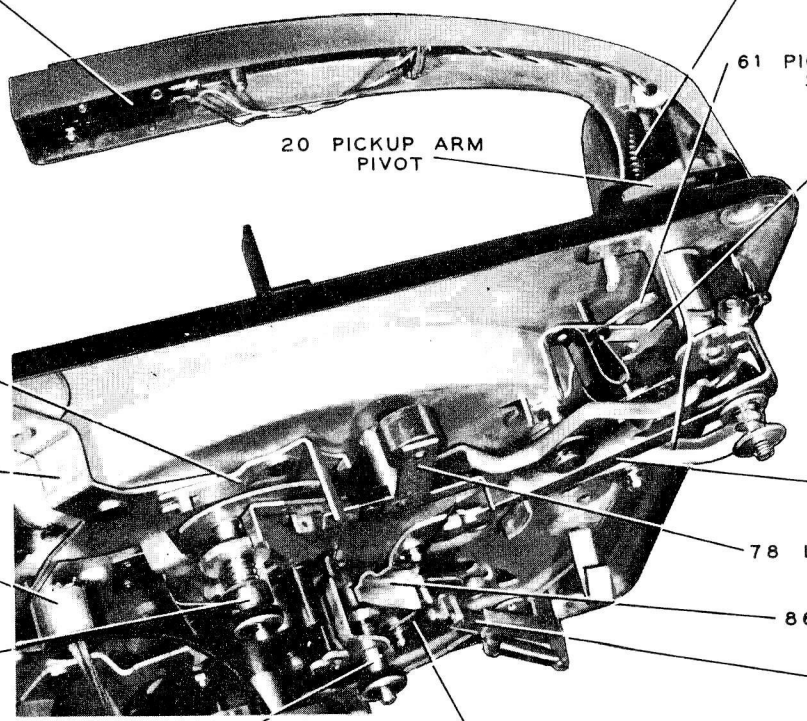
23 PICKUP CARTRIDGE
18 COUNTER BALANCE SPRING
61 PICKUP ARM STABILIZING LEVER
20 PICKUP ARM PIVOT
65 PICKUP ARM LEVER
90 REJECT LATCH
93 OPERATING CONTROL CAM
65C TRIP ARM
91 POWER SWITCH
78 LOWER TRIP LEVER
86 LOCK OUT LEVER
42' CYCLING CARRIAGE ENGAGEMENT STUD
51 PUSH ROD
40 CYCLING CARRIAGE RETURN STUD
55 PUSH ROD ACTUATING LEVER

CYCLE OF OPERATION

Function	Description
Place a stack of 10 or 12 inch records over the center post. Lower the record stabilizing clamp.	1. The records are supported by notch or step in center post. 2. The edge of the records rest on the separator shelf. 10 inch records on the 10 inch shelf (4) 12 inch records on the 12 inch shelf (9) 3. The position of the 10 inch support shelf (4) (up or down) determines the landing position of the pickup due to the action on the landing change (59) and index (62) levers.
Turn speed selector knob to 78 or 33⅓ rpm position (depending on type of record).	1. The motor has a turned down shaft providing a means of changing speed by raising or lowering the idler on the dual diameter shaft.
Rotate stylus knob.	1. The rotation of the stylus knob selects the proper stylus depending on the type of record to be played.
Push Control knob to reject position and release.	1. The Operating Control detent (74) mechanically connected to control knob engages and actuates the power switch (91) starting the turntable rotating. 2. Further rotation of the control knob moves the lower trip lever (78) sufficiently to allow the trip dog (34A) to slide off the end of the trip latch (89).

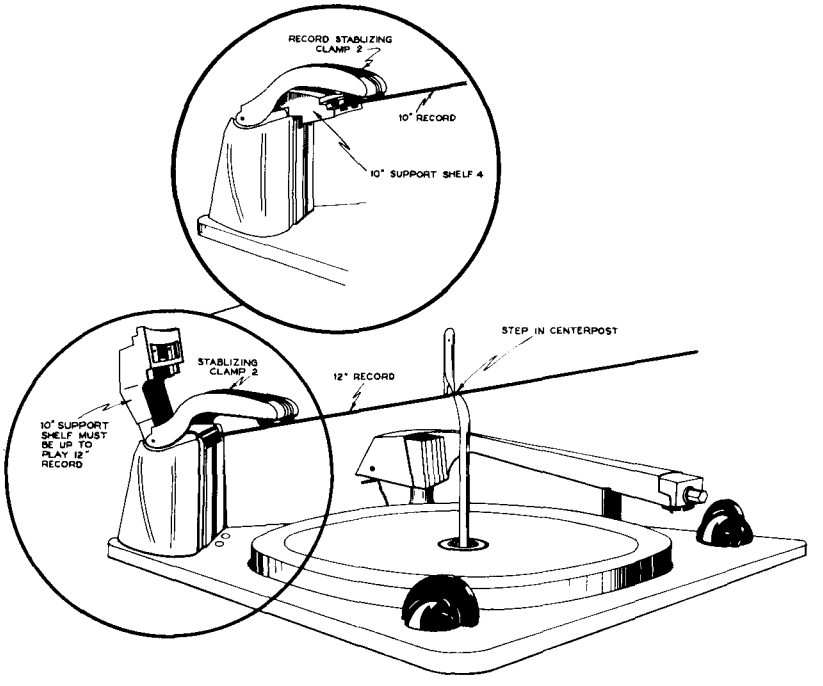

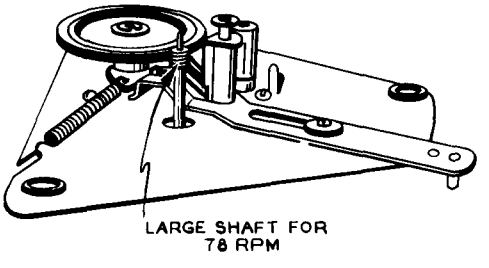

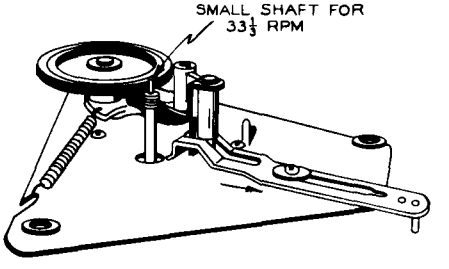

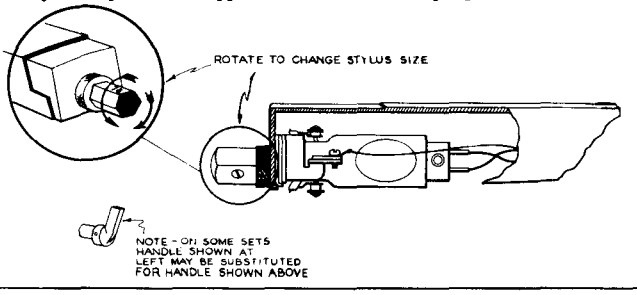

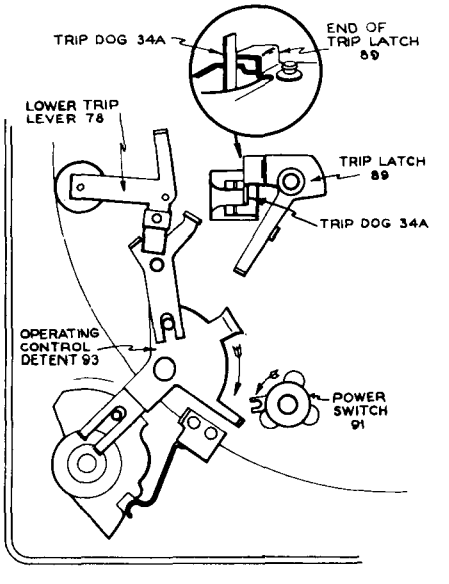

3. As the trip dog slides off the trip latch, the trip lever (34) has moved in sufficiently for the offset on the turntable shaft to contact the end of the trip lever and push it back.
4. The backward movement of the trip lever (34) unlatches cycling engagement stud (42) allowing it to raise and engage the cycling spiral.

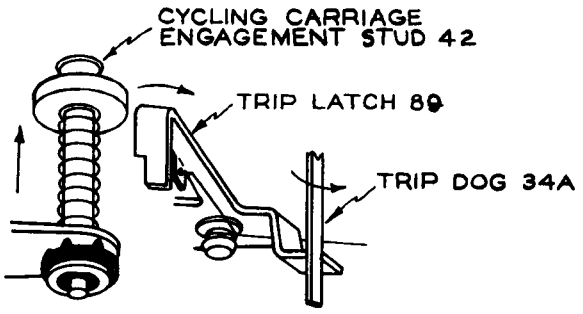

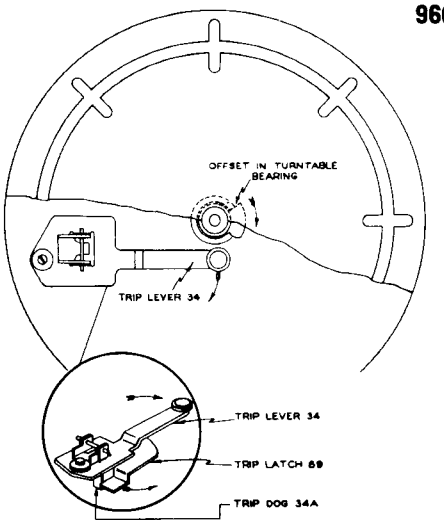

Cycling starts.

1. As the cycling carriage engagement stud (42) engages the spiral on the under side of the turntable, the carriage begins to move counterclockwise (viewed from the bottom of the motorboard) about its pivot.

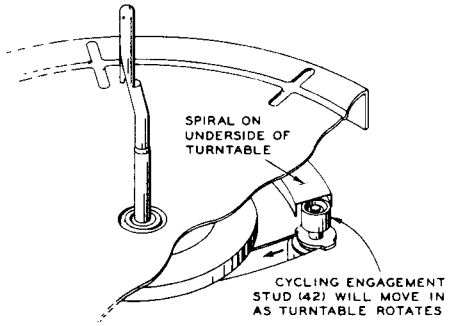

2. The inclined end of the carriage located beneath the pick-up arm pivot raises the elevating rod (19) lifting the pick-up arm.
3. The same end of the cycling carriage has two spring steel blades forming a frictional connection between the cycling carriage and the pickup arm lever (65) by wedging the disc portion of the pickup arm lever between the two blades. This moves the pickup arm outward.

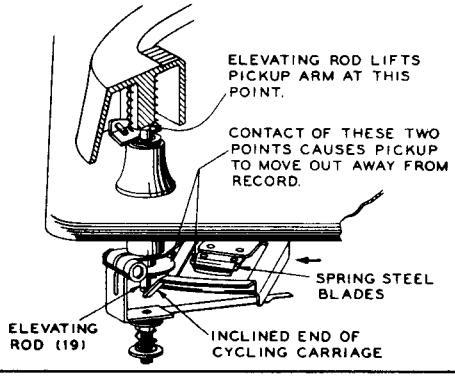

4. A small tab on the cycling carriage contacts and moves the pickup arm stabilizing lever (61) against the stud (65A) mounted on the tension spring incorporated in the pickup arm lever (65). This contact stabilizes the pickup arm in its movement during change cycle.

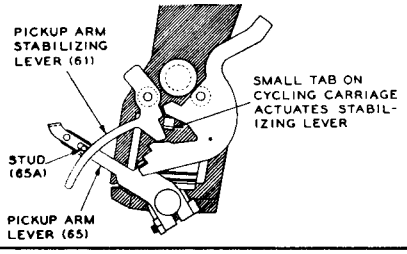

Record drops to the turntable.

1. As the cycling carriage continues to rotate, the end nearest the support post contacts push rod actuating lever (55), starting the action necessary to push the record off the center post.
2. The movement of the push rod actuating lever (55) through the linkage of push rod (51) push-off slide actuating lever (30) and push-off slide (5 or 10) pushes the record off the center post.
3. Record drops to turntable.

Note: The mechanism incorporates two push-off slides; one for ten inch (5) and one for twelve inch records (10).

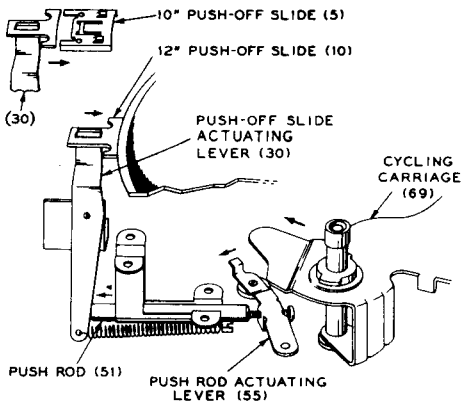

Pickup moves in for landing.

1. Up to this time the cycling carriage (69) is moving in a counterclockwise direction (viewed from the bottom). After the record is pushed off the center post the lock out lever (86) mounted on cycling carriage contacts the stop and in so doing unlatches the cycling carriage return stud (40).
2. As the cycling carriage return stud (40) raises to engage the spiral on the underside of the turntable, the cycling engagement stud (42) is pushed down and latched by the action of the incline in the spiral tract, thereby disengaging it from the spiral.
3. The cycling carriage is now moving clockwise (viewed from the bottom of the motorboard).

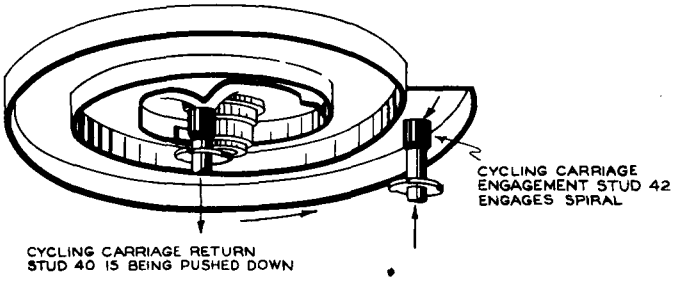

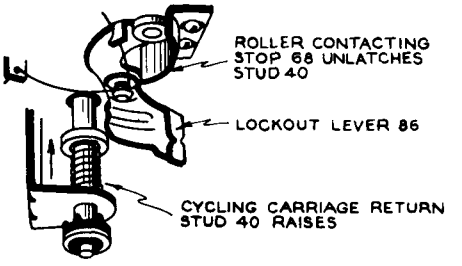

4. The end of the cycling carriage beneath the pickup arm pivot again makes the frictional contact with the disc on the pickup arm lever (65). This contact moves the pickup arm in for landing.
5. The pickup arm on its inward movement continues to be stabilized by the pickup arm stabilizing lever (61). This stabilizing continues until the tab on the pickup arm lever is against the ten or twelve inch landing notch in the indexing lever. At this point the pickup should be directly over the point of landing on the record.
6. An instant later the small tab on the cycling carriage contacts the side of the pickup arm stabilizing lever, unlatching the indexing lever (62) and permitting free motion of the pickup arm.
7. The elevating rod sliding down the small incline on the cycling carriage permits the pickup to land on the start of the record.

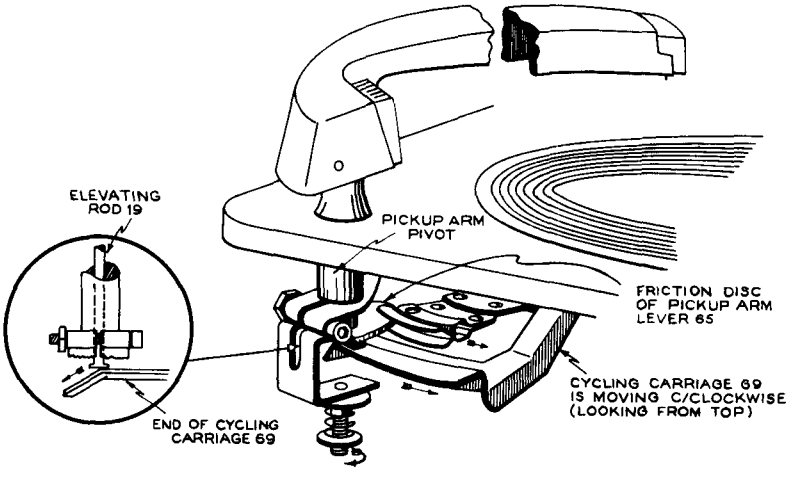

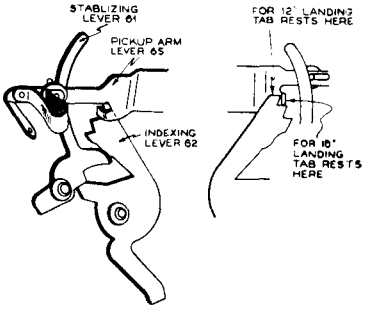

Note: It should be understood that the function of the indexing lever (62) is to determine the landing position of the pickup, both on ten and twelve inch records.

This is done by the pickup arm change lever (59) functioning as a stop for the indexing lever (62). The position of the pickup arm change lever in turn is governed by the position of the ten inch support shelf (4) (up or down).

8. As the pickup is landing the cycling carriage has reached its starting position and the cycling carriage return stud (40) is pushed down by the incline in the cycling spiral and locked in position.

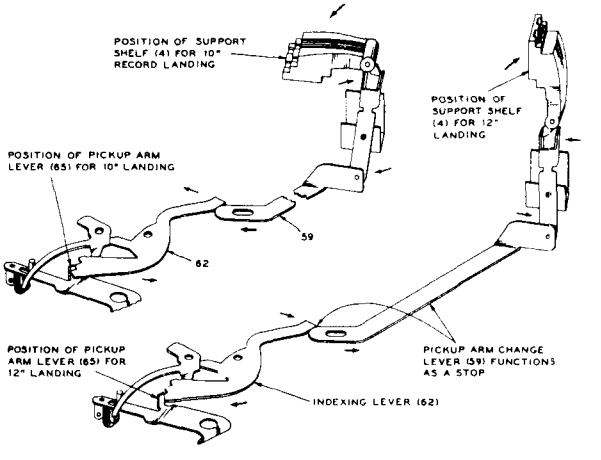

Cycling is completed and record plays.

1. While the record plays, the end of the trip lever (34) is slowly moving toward the center post due to the force produced by the pickup arm down through the linkage of the pickup arm lever (65) trip arm (65C) and the lower trip lever (78).
2. As the trip lever slowly (34) approaches the offset on the inner shaft of the turntable it is pushed back slightly with each revolution of the turntable.
3. The trip lever continues to be pushed back against the friction clutch of the trip arm (65C) as long as the pickup arm moves in at a constant rate of speed.
4. When the pickup reaches the end of the selection the pickup moves into the eccentric groove quite rapidly. This rapid movement permits the trip dog (34A) to slide off the edge of the trip latch (89) before the offset on the turntable shaft has made one revolution. As the offset contacts the trip lever (34), it unlatches the trip latch (89) permitting the cycling carriage engagement stud (42) to raise and engage the cycling spiral starting a new cycle.

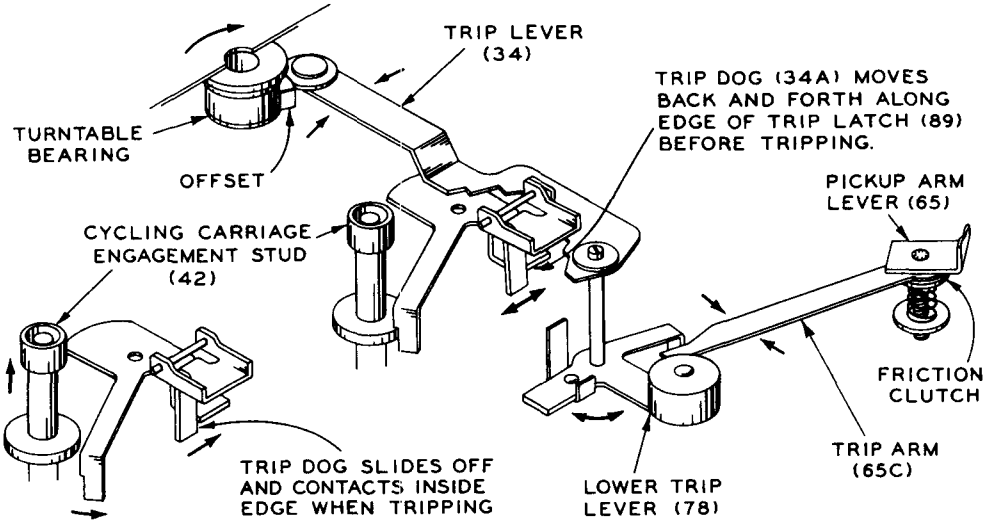

Pickup raises and moves out.

1. After the mechanism has been tripped the pickup arm moves out and rises by action of the cycling carriage (69) on the pickup arm lever (65) and the elevating rod (19).
2. The mechanism again follows the preceding sequence of dropping and playing records until the last record of this stack has been played. The mechanism is not provided with an automatic stop so the last selection is repeated until the pickup arm is placed on the rest and the power removed from the drive motor.

Note: The pickup arm can be raised and moved to the rest position any time after the mechanism has completed the change cycle, providing the pickup has not played more than approximately ⅓ of the selection. If the pickup arm is moved after this time, the mechanism will go into change cycle and the pickup arm should not be retarded in its movement.

The pickup arm can also be handled when the mechanism is not in operation, providing the pickup arm has freedom of motion.

Turn function control knob to manual.

1. The control detent (74) which is mechanically connected to the control knob, actuates the power switch through the control cam (93). This action starts the turntable rotating.
2. One end of the control cam also slides under the collar (79) on the cycling carriage engagement stud (42). This prevents the stud from raising if the trip lever is disturbed.
3. The control cam also holds the manual lock out lever (90) in such a position that it locks the lower trip lever (78) to prevent tripping. In this position, the trip lever (34) is held away preventing contact with off-set on turntable shaft.

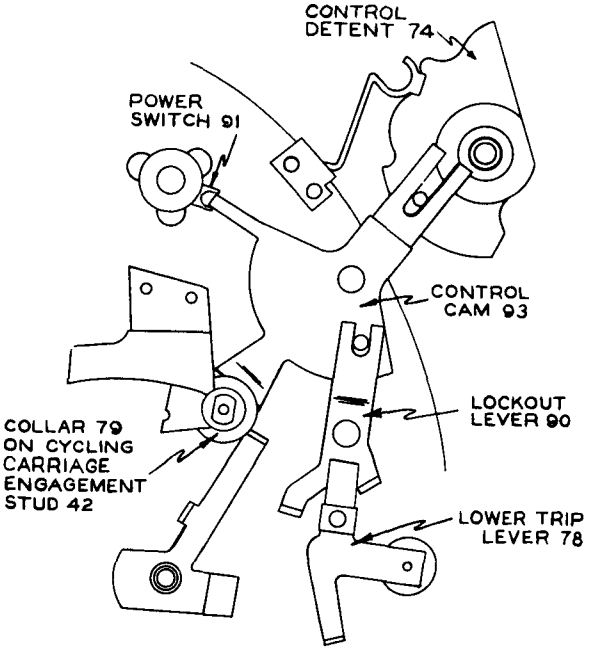

ADJUSTMENTS

POSITION OF SUPPORT POST

1. Loosen three mounting screws at the base of the support post.
2. Slide support post to a position as indicated in accompanying drawing. The curvature of the shelf should conform with a 12" record.
3. After push-off slides have been adjusted, try a stack of both 10 and 12 inch records to determine the ease of separation. A compromise from the setting may be necessary due to differences in length of the 10 inch support shelf (4).

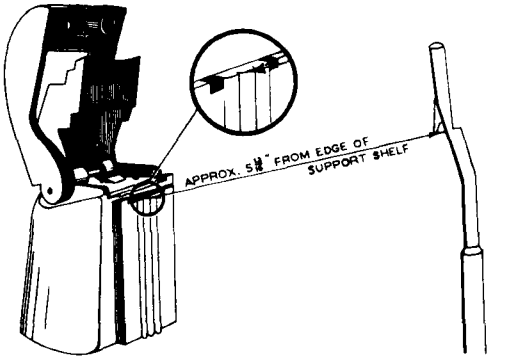

Adjustment of Push-Off Slides

1. Trip the mechanism and turn the turntable by hand until the cycling carriage has rotated counterclockwise, (Viewed from the bottom) to its limit.
2. Adjust screw 57 on push rod actuating lever until the 12 inch push-off slide is extending approximately 1/16" over the edge of the shelf.
3. Turn lock nut to hold screw and try a stack of 10 and 12 inch records for ease in separation.

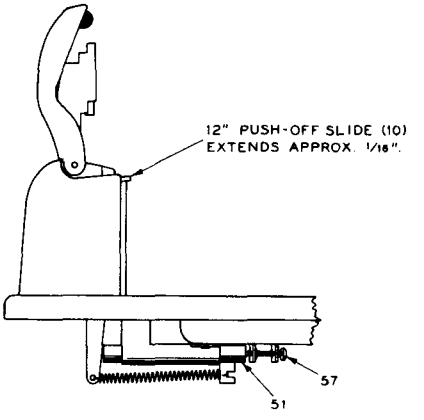

Adjust lock out lever stop (68)

The lock out lever stop (68) should be so adjusted that the cycling carriage return stud (40) raises an instant before the spiral engagement stud (42) is pushed down. If this timing is not properly made the mechanism will jam.

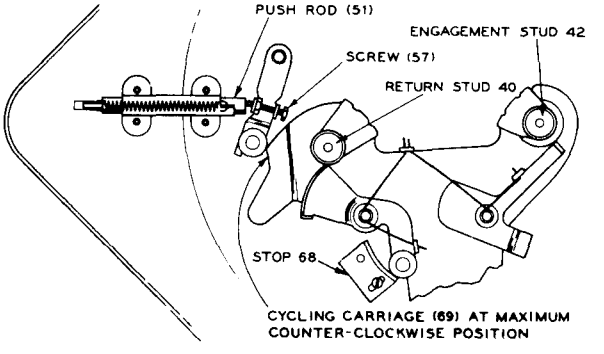

Adjustment of friction clutch on trip arm

1. Turn the threaded washer on the pickup arm lever to produce sufficient friction for trip arm so the mechanism will have positive tripping. Care must be exercised against excessive friction as it would cause premature wear on the side walls of the record or in many cases, actually jump the grooves.

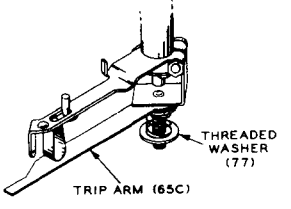

Pickup Landing Adjustment

1. Disconnect power from mechanism.
2. Place a 10" record on turntable.
3. Turn the operating control to reject and release.
4. Rotate the turntable by hand until the tab on the pickup arm lever (65) is about ready to move away from the indexing lever. (The pickup will be a few inches above the record at this moment).
5. Loosen adjustment screw and hold the pickup arm lever in this position while moving the pickup arm directly above the point of landing. (Landing should be about half way between the edge of the record and the start of the recorded section. Approximately 4-11/16" from the side of the center post for a 10" record).
6. Tighten adjustment screw, apply power and check the pickup landing on both 10 and 12 inch records.
   If mechanism fails to land properly on 12" records the tab may be bent. In that case bend slightly.

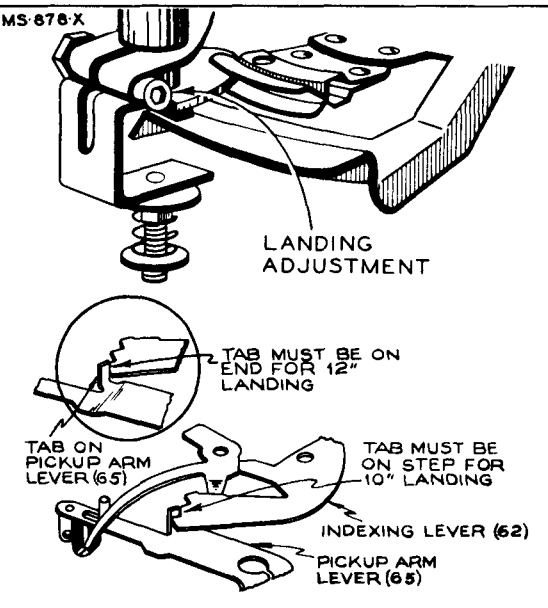

SERVICE HINTS

Fails To Separate Records Properly

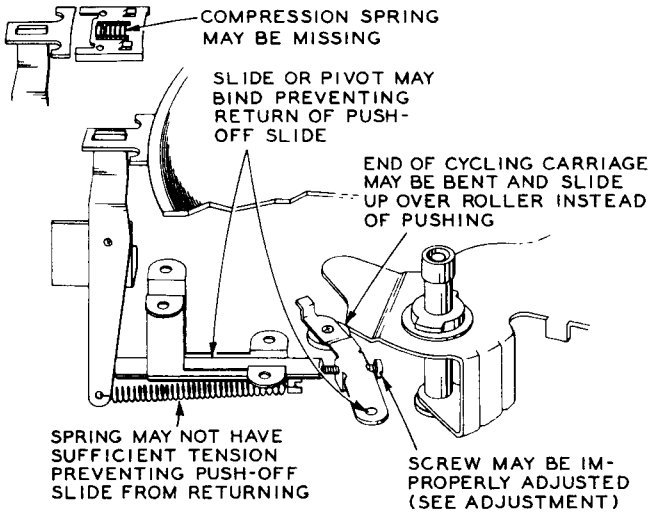

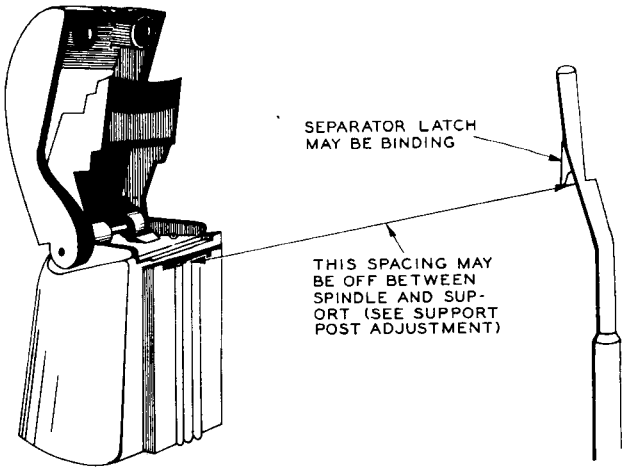

Fails To Complete Cycle

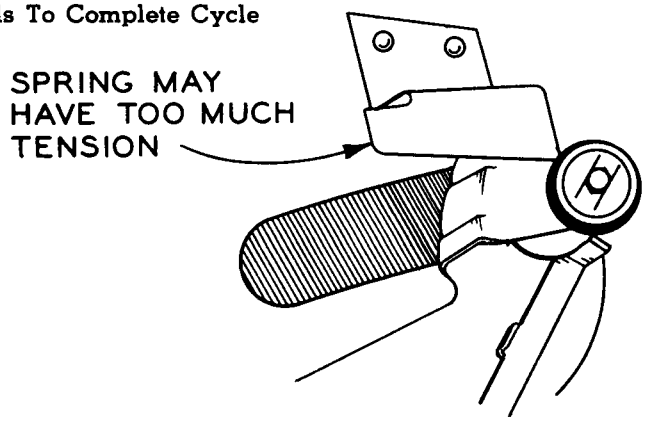

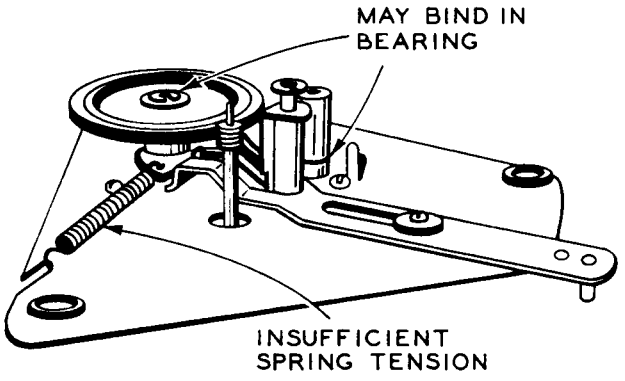

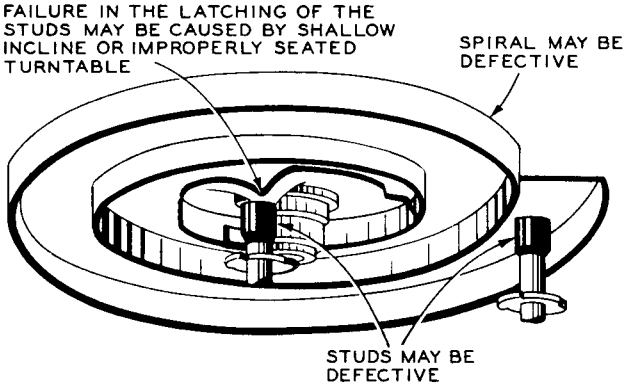

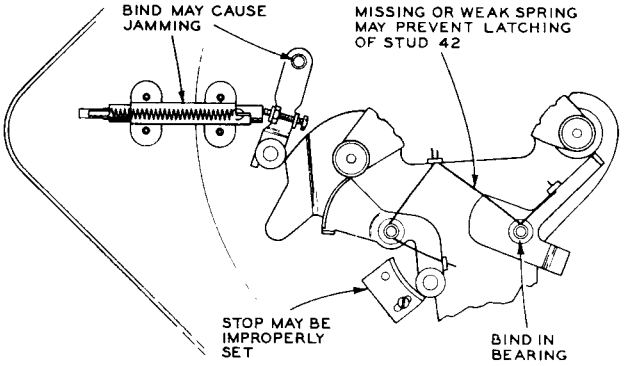

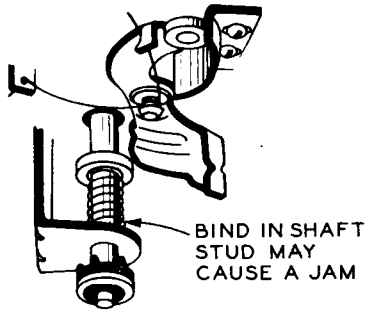

Weak—Distorted or No Output

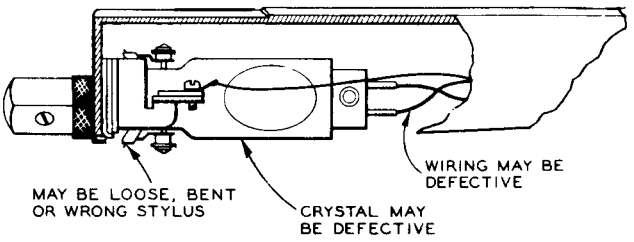

Fails to Trip

SERVICE HINTS (Continued)

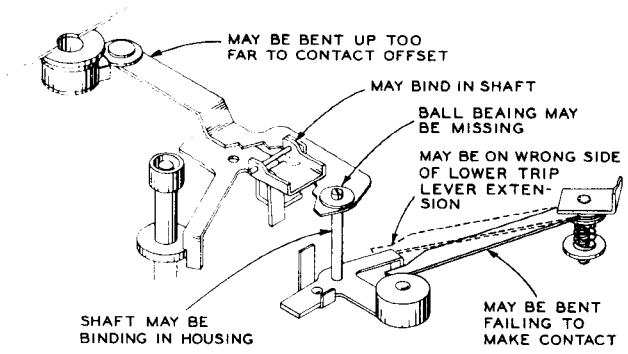

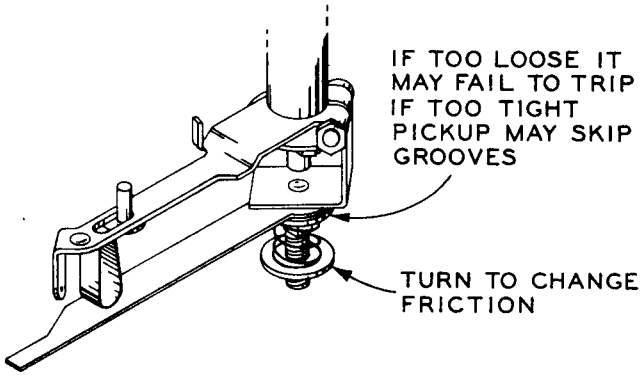

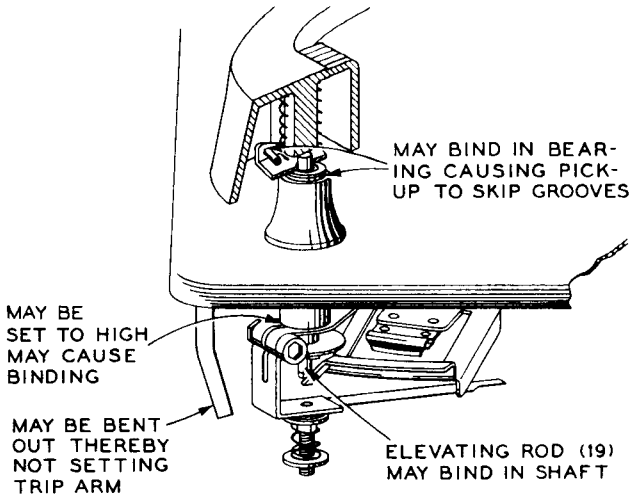

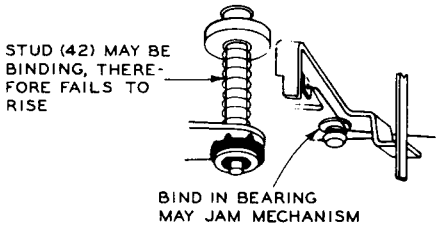

Pickup Skips Grooves

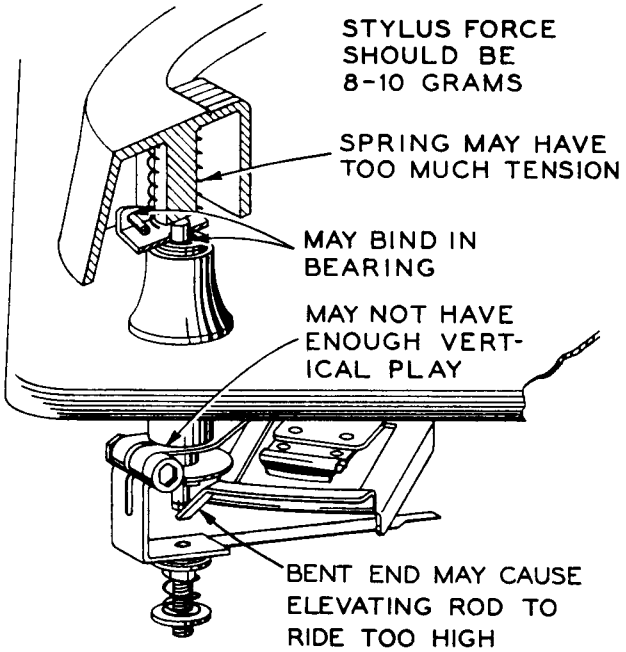

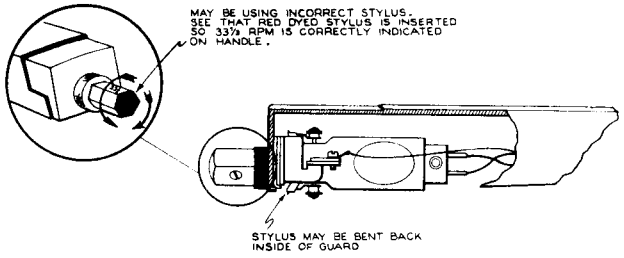

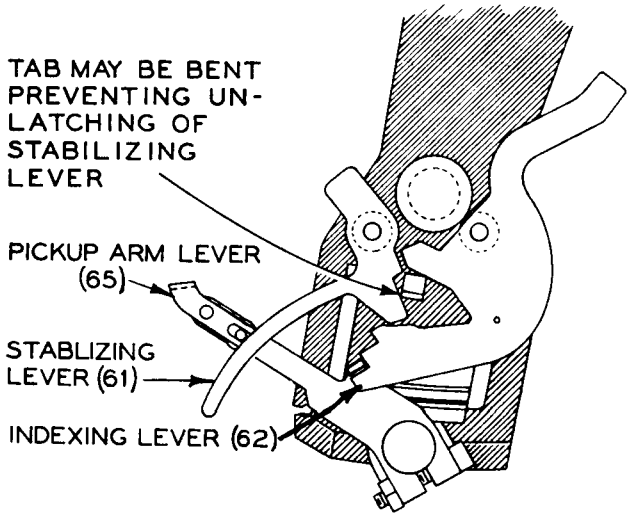

Turntable Fails To Change Speed or "Wow"

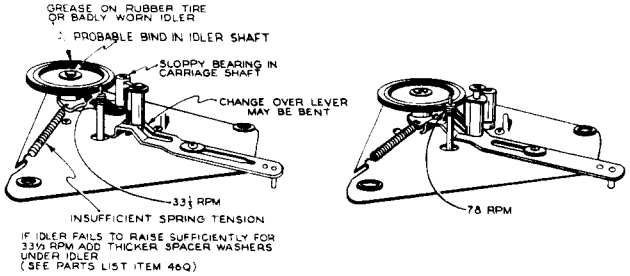

Fails To Land Properly

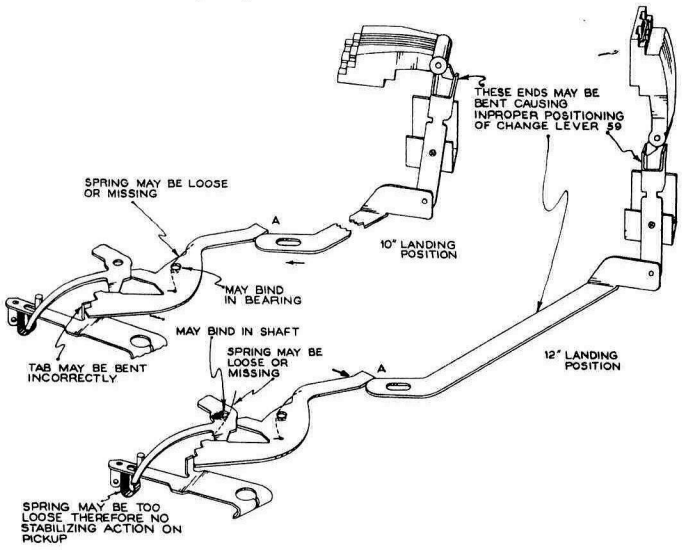

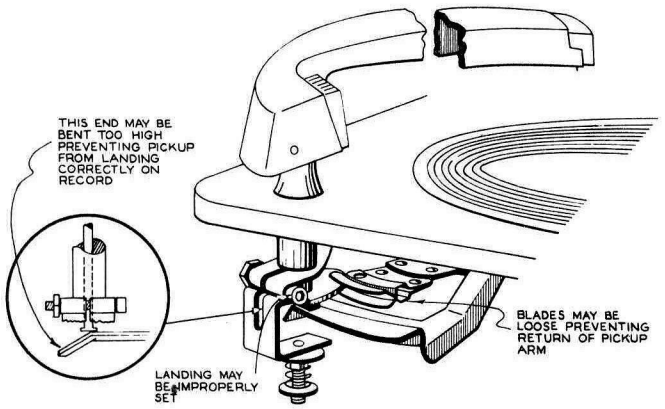

Turntable Fails To Rotate

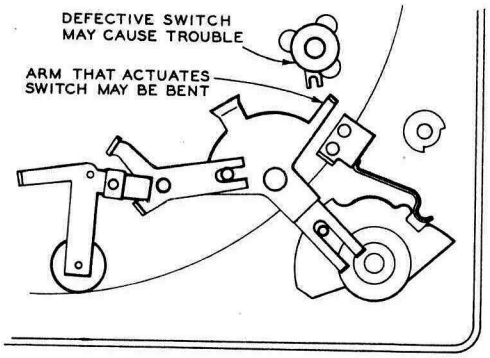

INCLINE IN SPIRAL MAY BE TOO SHALLOW THEREBY FAILING TO PUSH STUDS DOWN FAR ENOUGH CAUSING A JAM.
(BEND INCLINE AWAY FROM TURNTABLE SLIGHTLY)

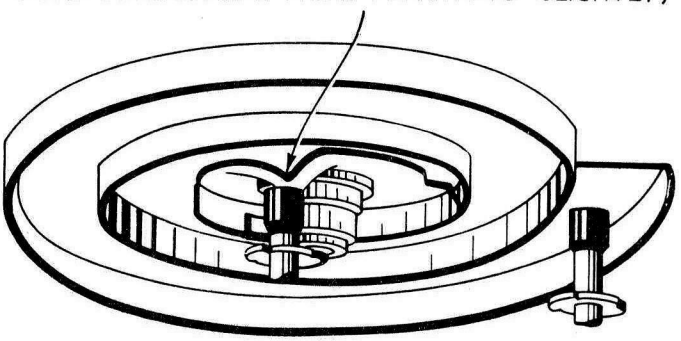

DO YOU KNOW?

(Jam)

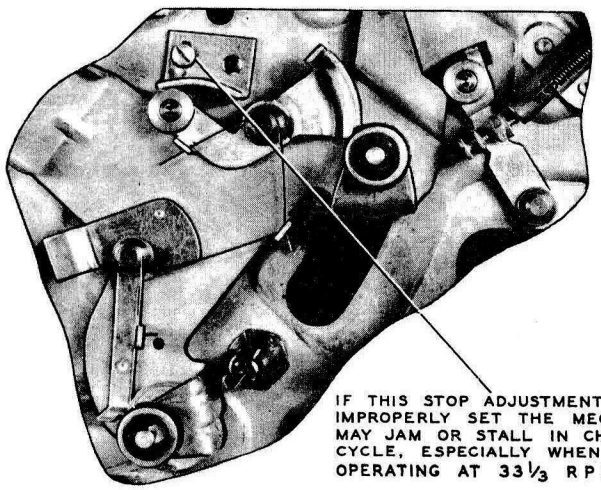

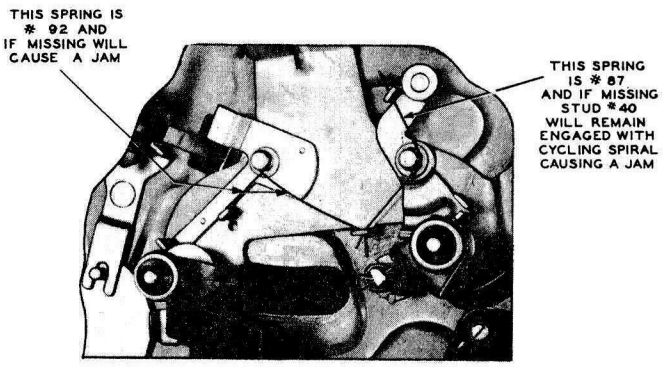

DO YOU KNOW?

(Tripping)

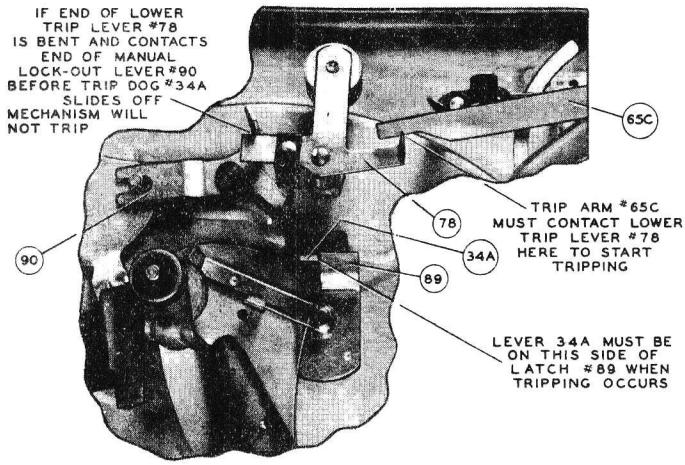

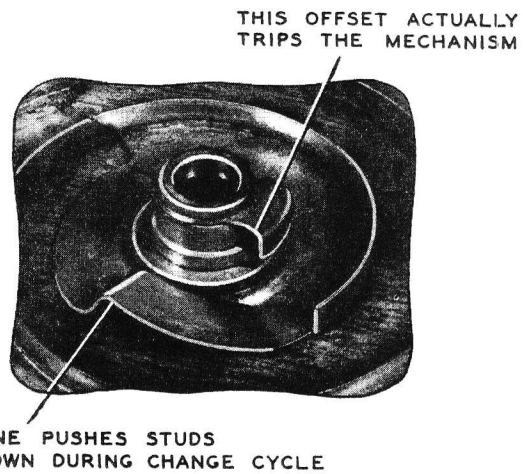

(Jumping grooves)

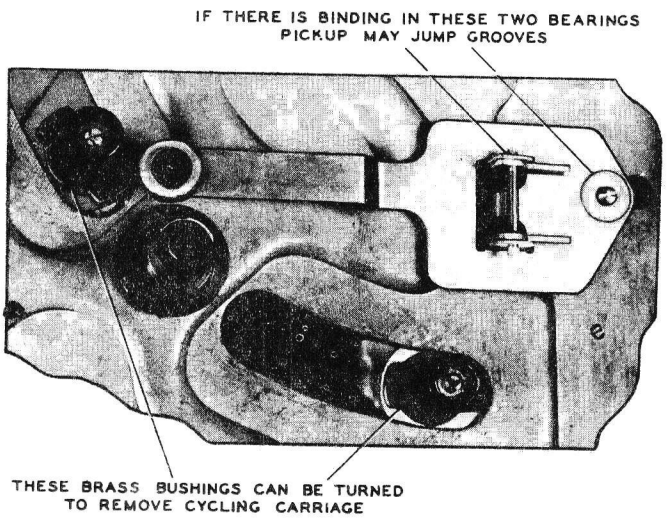

(Record separation)

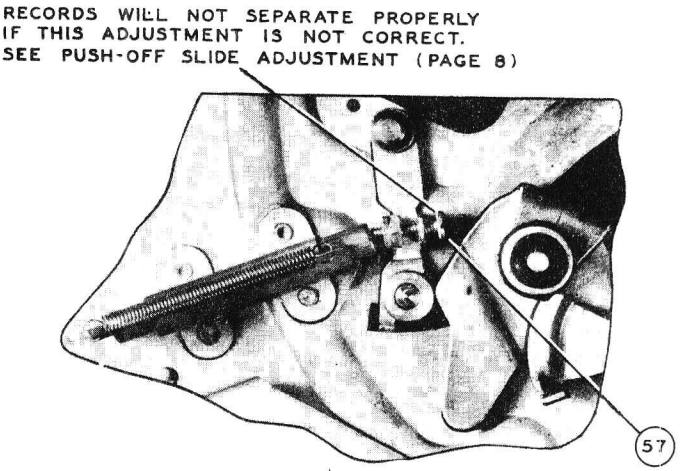

(Pickup landing)

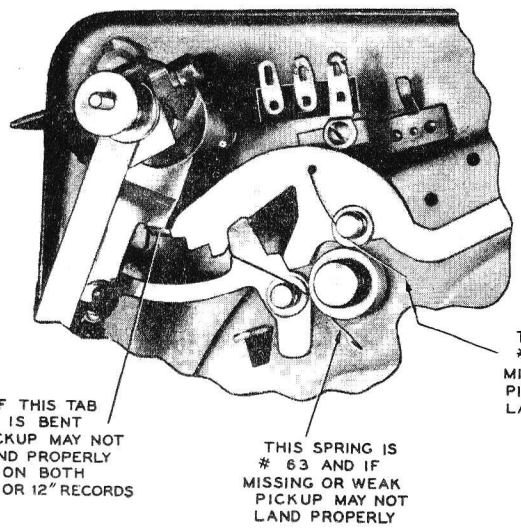

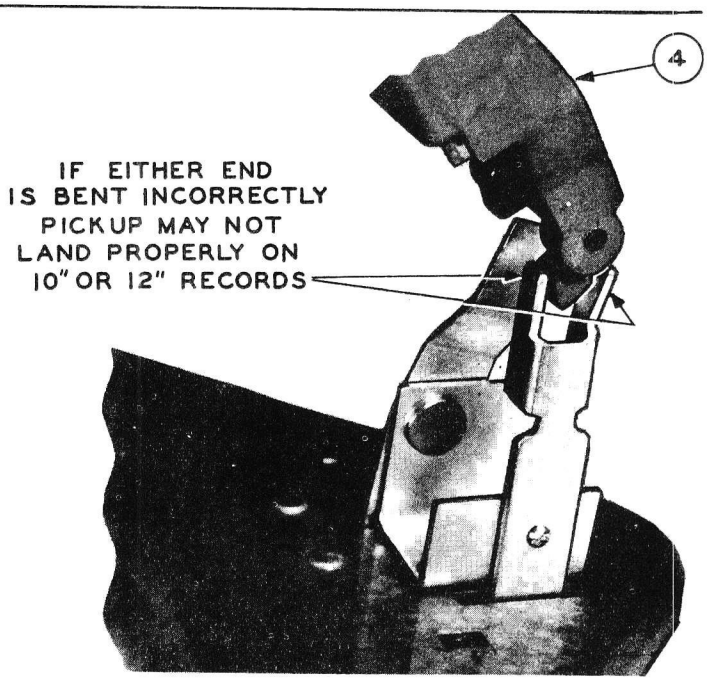

(Pickup landing)

DO YOU KNOW?

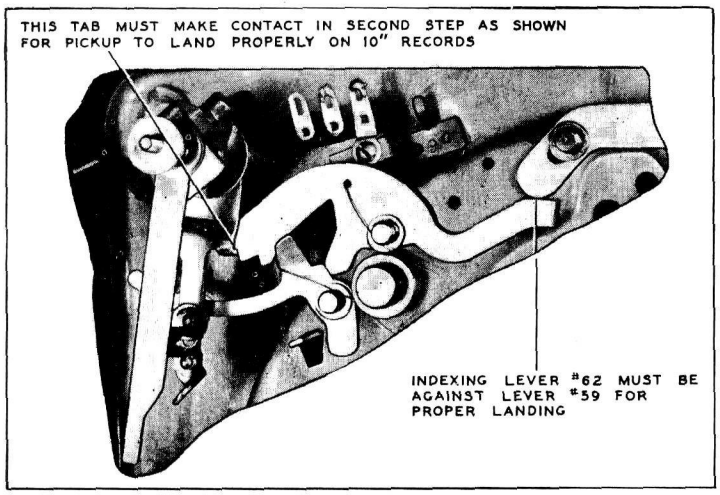

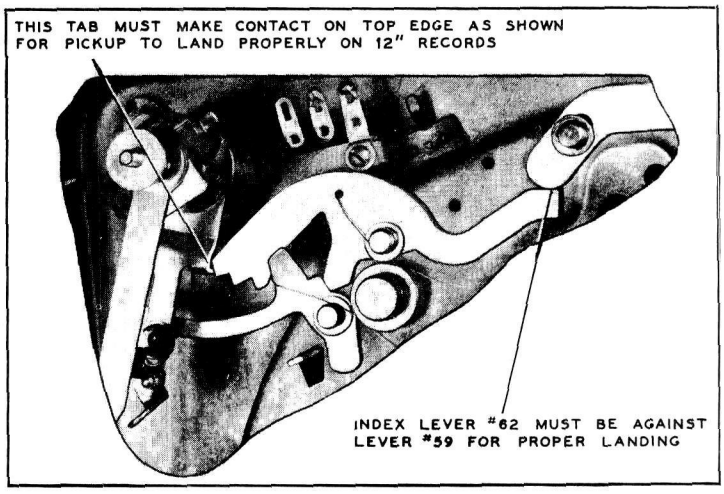

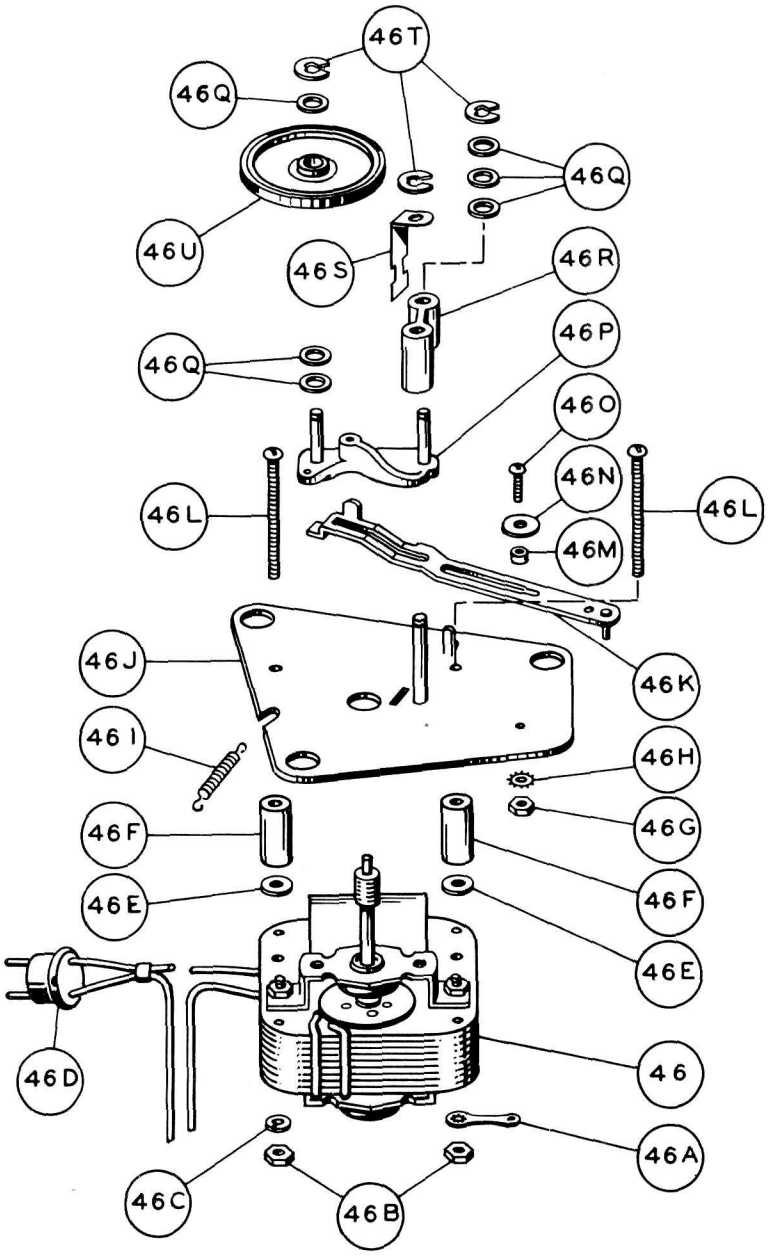

Exploded view of 60 cycle motor for RP-200 (960282-1)

ILL. No.	STOCK No.	DESCRIPTION
1	75254	Pin—Push-off box hinge pin
2	75255	Clamp—Stabilizing clamp assembly (includes rubber bumpers)
3	75256	Bumper—Rubber bumper for stabilizing clamp (2 req'd) (2 included)
4	75257	Support—10" record support
5	75258	Slide—10" record push-off slide
6	75259	Spring—Return spring for 10" push-off slide (.250" O.D. x 9/16"—5 turns)
7	——	Screw—#4-40 x 3/8" round head steel machine screw
8	75260	Cover—12" record push-off slide cover
9	75261	Support—Main support (casting) for push-off mechanism
10	75262	Slide—12" record push-off slide
11	75263	Spindle—Turntable spindle or centerpost (includes ILL.11A)
11B	75303	Ring—Turntable retainer ring
12	75264	Knob—Cartridge control knob complete with set screw
12A	——	Screw—Screw for handle type stylus selector knob (included with ILL.12)
14	75265	Collar—Threaded collar for crystal mounting assembly
15	75266	Arm—Pickup arm shell complete with fibre guide
16	75267	Pin—Pivot arm pin
17	75268	Spring—Retaining spring (hair-pin) for pivot arm pin
18	75269	Spring—Counterbalance spring (17/32" O.D. x 2-13/16" long—25 turns)
19	75270	Rod—Elevating rod
20	75271	Arm—Pivot arm and shaft
21	75272	Cable—Three wire pickup cable (12") complete with connectors
22	——	Screw—Mounting screw for crystal cartridge (2 req'd) (4140 x 1/8" fillister head screw)
23	75044	Crystal—Replacement crystal complete with styluses
—	——	SEE PAGE 17 FOR EXPORT PICKUP CARTRIDGE
23A	75045	Stylus—Stylus (red) only for 33-1/3 RPM section
23B	75046	Stylus—Stylus (plain) only for 78 RPM section
23C	75274	Nut—Mounting nut (knurled) for stylus
24	75273	Mount—Crystal cartridge mount assembly (2 piece assembly)
25	75275	Turntable—10" dia.
26	75276	Washer—Spacing washer (2 req'd) (.008 x 13/32" I.D. x 9/16" I.D.—Phosphor Bronze)
27	75277	Spring—Pressure spring for 10" record support
28	——	Nut—4-40 hex nut
29	75278	Spring—Tension spring for stabilizing clamp (.216" O.D. x 1 7/8"—20 turns)
30	75279	Lever—Push-off slide actuating lever assembly
31	3658	Ball—Steel ball (3/32" dia.)
32	——	Screw—#4-40 x 1/4" fillister head screw
33	75280	Washer—Steel washer (.031" x .125" x 1/2")
34	75281	Lever—Trip lever assembly including trip dog. ILL. 34A
35	28360	Screw—Screw to mount main support (3 req'd) (#6-32 x 3/8" thread cutting)
36	75040	Spring—Conical spring to mount record changer (4 req'd)
37	75282	Grommet—Rubber grommet for pickup cable exit
38	——	Board—Motorboard complete with all riveted, staked and welded parts
39	75283	Knob—Control knob
40	75284	Stud—Cycling carriage return stud including shaft, washer and cambric roller
41	75285	Washer—Friction spring washer for turntable and motor mounting. (.250" x .281" I.D. x .450" O.D.)
42	75284	Stud—Cycling carriage engagement stud including shaft, washer and cambric roller
43	75286	Grommet—Rubber grommet to mount motor (3 req'd)
44	75287	Washer—"C" washer to mount motor (3 req'd)
45	——	Lug—Terminal lug
46	75288	Motor—117 volt, 60 cycle
46	S-5812	Motor 117 volt, 25 cycle
46A	——	Lug—Terminal lug
46B	——	Nut—#6-32 hex nut to mount top plate (2 req'd)
46C	——	Lockwasher—#6 lockwasher (split) to mount top plate
46D	30870	Connector—2 contact male connector for motor leads
46E	——	Washer—Flat washer for under metal spacer (2 req'd)
46F	75290	Spacer—Metal spacer for motor mounting (2 req'd)
46G	——	Nut—#4 hex nut to mount idler riser slide
46H	——	Lockwasher—#4 (external) lockwasher to mount idler riser slide
46I	75291	Spring—Tension spring for idler carriage
46J	75292	Plate—Motor top plate including stud for idler pivot link
46K	75293	Slide—Idler riser slide
46L	——	Screw—#6-32 x 1 3/4" round head brass machine screw to mount top plate (2 req'd)
46M	75294	Spacer—Metal spacer to mount idler riser slide
46N	——	Washer—Flat washer to mount idler riser slide
46O	——	Screw—Screw to mount idler riser slide (#4-40 x 3/8" round head steel machine screw)
46P	75295	Carriage—Idler carriage
46Q	75296	Washer—Fibre dampening washer .010 thick
	75436	Washer—Fibre dampening washer .020 thick
46R	75297	Link—Idler pivot link
46S	75298	Guide—Idler riser slide guide
46T	75287	Washer—"C" washer to mount idler carriage and idler wheel
46U	75300	Wheel—Idler wheel
47	75301	Arm—Speed selector arm
48	75302	Lever—Speed selector lever complete with mounting pivot stud and washer
—	——	SEE PAGE 17 FOR LEVER USED ON EXPORT INSTRUMENTS
49	75282	Grommet—Rubber grommet used in speed change assembly
50	75304	Washer—Spacer washer (small) for speed selector arm (.059" x .190" I.D. x 5/8" O.D.)
51	75305	Rod—Push rod
52	75306	Screw—Mounting screw complete with lockwasher for control knobs (10-32 x 3/8" fillister head-special)
53	75307	Housing—Push rod housing complete with four (4) rivets
54	75308	Spring—Tension spring for push rod
55	75309	Lever—Push rod actuating lever complete with mounting pivot stud and washer (includes Ill. 56 and 57)
56	——	Nut—#6 hex nut for push rod travel adjusting screw (includes 75309, Ill. 55)
57	——	Screw—Adjusting screw for push rod travel (#6-32 x 5/8" fillister head screw) (included in 75309, Ill. 55)
58	75310	Pin—Cotter pin for turntable spindle or centerpost
59	75311	Lever—Pickup arm landing change lever complete with mounting pivot stud and washer
60	——	Board—Terminal board (3 contact)
61	75312	Lever—Pickup arm stabilizing lever complete with mounting pivot stud and washer
62	75313	Lever—Pickup arm indexing lever complete with mounting pivot stud and washer
63	75314	Spring—Tension spring for stabilizing lever
64	75315	Screw—Screw to mount pickup arm lever (10-32" x 1" socket head cap screw)
65	75316	Lever—Pickup arm lever including trip arm, engagement stud and tension spring
66	——	Nut—#10 hex nut for pickup arm lever mounting screw
67	75317	Spring—Tension spring for indexing lever (2 turns)
68	75318	Stop—Lockout lever stop complete with mounting rivet
69	75319	Carriage—Cycling carriage
70	75320	Washer—Mounting washer (thin) for cycling carriage
71	75321	Washer—Mounting washer (thick) for cycling carriage
72	75322	Washer—Mounting washer (split) for cycling carriage
73	75323	Spring—Lock spring for detent complete with (2) rivets
74	75324	Detent—Operating control detent
75	75325	Washer—Friction washer (square-hole) for trip arm (.060" x .189" square I.D. x 5/8" O.D.)
76	75326	Spring—Friction adjustment spring for trip arm (.360" O.D. x 33/64"—5 1/2 turns)
77	75327	Washer—Threaded washer for adjusting trip arm friction (.0673 x .159" I.D. x 5/8" O.D.—.159" I.D. hole tapped #10-32)
78	75328	Lever—Lower trip lever
79	75329	Washer—Shouldered washer for cycling carriage engagement stud for Ill. 42
80	75330	Spacer—Metal spacer for cycling carriage studs
81	75331	Spring—Tension spring for cam roller (.379" O.D. x 1-1/32"—7 turns)
82	75332	Grommet—Rubber grommet for cycling carriage studs
83	75304	Washer—Stop washer for cam studs (.059" x .190" I.D. x 5/8" I.D.)
84	75334	Nut—Speed nut for cycling carriage studs
85	75335	Washer—Engagement washer for cycling carriage return stud
86	75336	Lever—Lockout lever complete with mounting pivot stud and washer
87	75337	Spring—Tension spring for lockout lever (2 turns)
88	75338	Spring—Friction stabilizing spring for cycling carriage complete with two (2) rivets
89	75339	Latch—Trip latch complete with mounting pivot stud and washer
90	75340	Lever—Manual lockout lever complete with mounting pivot stud and washer
91	75341	Switch—Power switch complete with cover
92	75342	Spring—Trip latch tension spring—2 turns
93	75343	Cam—Operating control cam complete with mounting pivot stud and washer

REFER TO REPLACEMENT PARTS PRICE LIST FOR PRICES

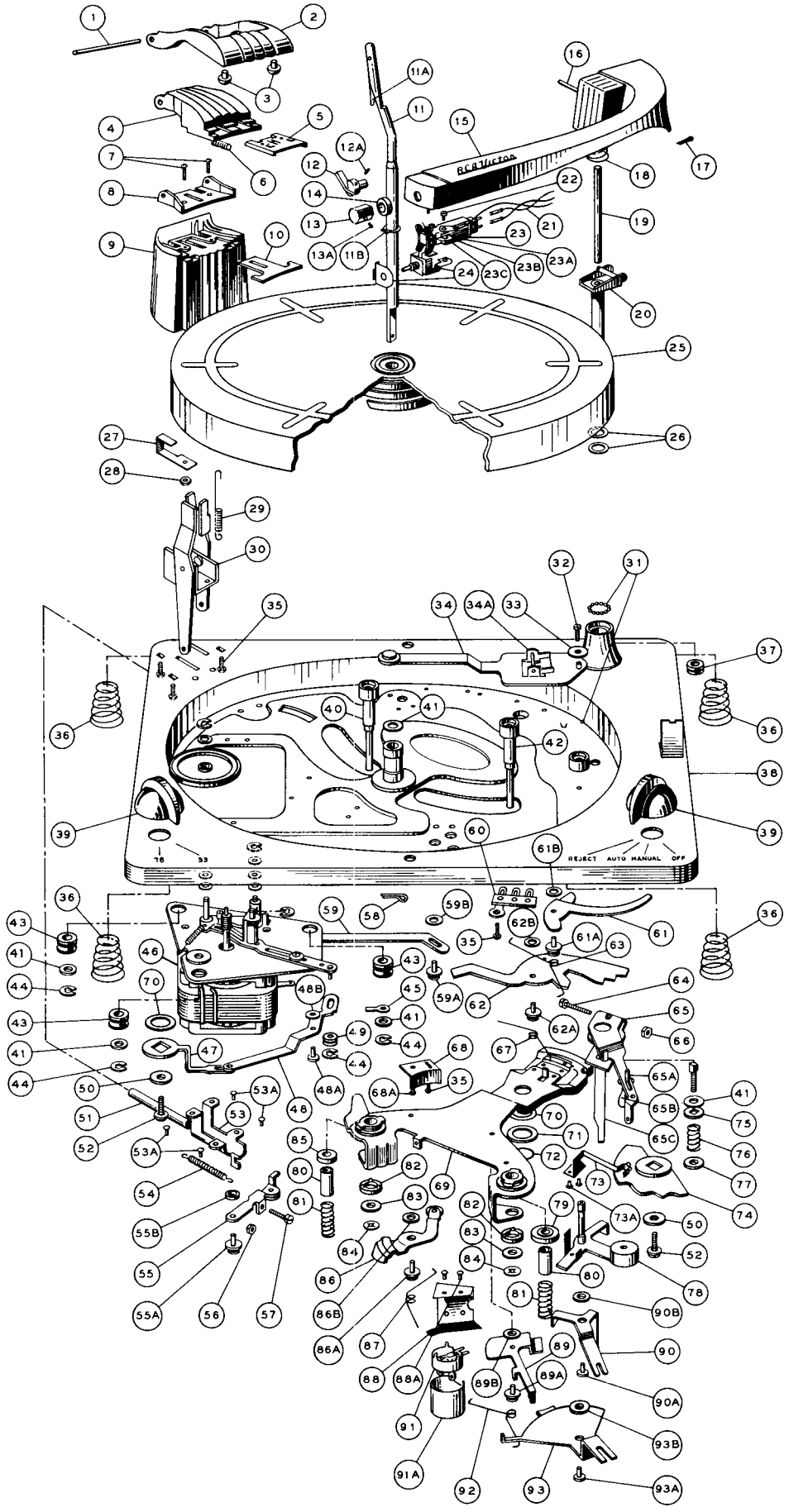

Exploded view of RP-200 (960282-1)

PICKUP INFORMATION

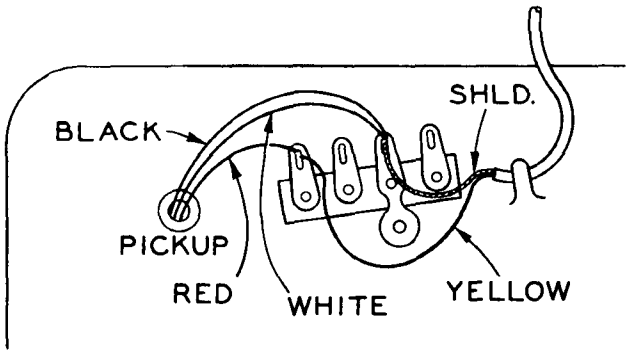

Pickup lead connections to motor board terminal strip.

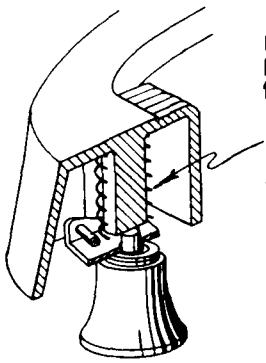

PICKUP FORCE SHOULD BE APPROXIMATELY 8-10 GRAMS. STRETCHING SPRING WILL DECREASE FORCE. COMPRESSING SPRING WILL INCREASE PICKUP FORCE.

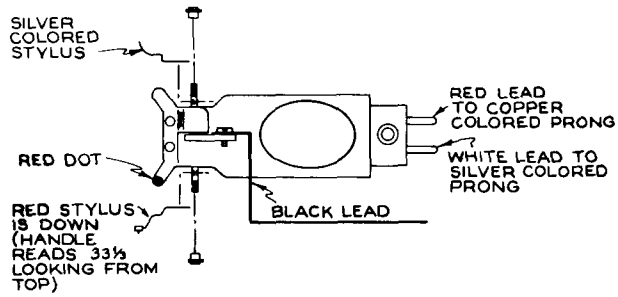

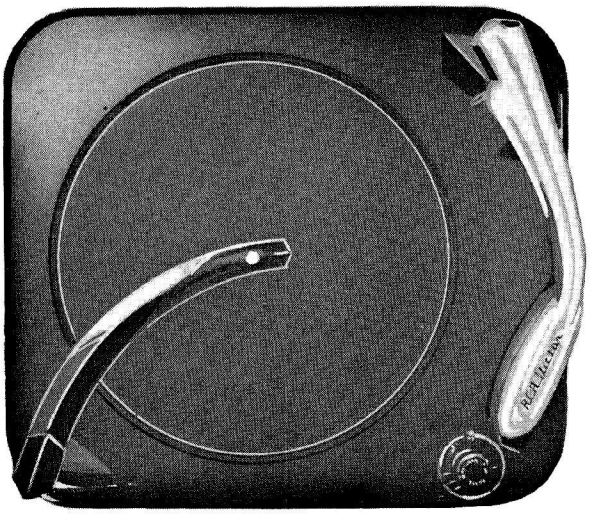

RCA VICTOR

RECORD CHANGER

MODEL RP-201

(960284-1-2)

SERVICE DATA

—1950 No. 17—

GENERAL SERVICE DIVISION
RCA VICTOR COMPANY LIMITED
MONTREAL, QUE.

SPECIFICATIONS

Turntable speed	78-33⅓ rpm
Record used	10" or 12" (intermixed)
Record capacity	Ten twelve-inch
	Twelve ten-inch
	Ten intermixed
Pickup force	Eight to 10 grams
Stylus radius	.001 inch for 33⅓ rpm
	.003 inch for 78 rpm
Type pickup	Crystal
Power supply	105-125 volts, 60 cycles A-C

INDEX

	Page
Features	1
Operation	1
Function of Principal Levers	2 & 3
Cycle of Operation	4-5-6-7-8
Service Hints	8-9-10
Removing Stylus	10
Adjustments	11
Do You Know? (Service Hints)	11-12
Exploded View of Motor	13
Exploded View of Mechanism	14
Parts List	15
Lubrication	16

FEATURES

1. This record changer is a center support intermix mechanism designed to play automatically a series of records up to ten 12-inch, twelve 10-inch, or ten intermixed records of the standard 78 RPM type. It will also play a series of the long playing 33-1/3 RPM type of similar diameter.
2. The mechanism is equipped with a light weight dual stylus pickup cartridge. The proper stylus can be selected by turning a knob in the end of the pickup arm.

After the last selection of the stack has been played, the pickup arm will go to the rest position and the mechanism will stop automatically.

4. The automatic tripping device is of the acceleration type.
5. The speed change is accomplished by a single control mounted on the motorboard.

AUTOMATIC OPERATION

1. Lift and rotate the record support to one side.
2. Place a stack of records over the center post.
3. Rotate the record support to a position so the center post will extend through the hole in the end of the support.
4. Turn the speed control to select the proper speed.
5. Rotate the knob in the end of the pickup arm to the proper numeral corresponding to the turntable speed.
6. Turn the function control knob to reject and release. The mechanism will play one side of each record of the stack until the last selection has been played at which time it will stop automatically.
7. To reject a record being played, turn the function control knob to reject and release.
8. To remove records, lift and turn the record support to one side.
9. Lift the stack of records straight up.

MANUAL OPERATION

1. Lift and rotate the record support to one side.
2. Place the record to be played on the turntable (tilt slightly to slide over the step in the centerpost).
3. Set the speed and pickup cartridge controls properly.
4. Turn function control to reject and release.
5. After the pickup sits on the record, place the record support over the centerpost, permitting it to rest on the step in the centerpost.
6. The mechanism will play the record after which it will stop automatically.

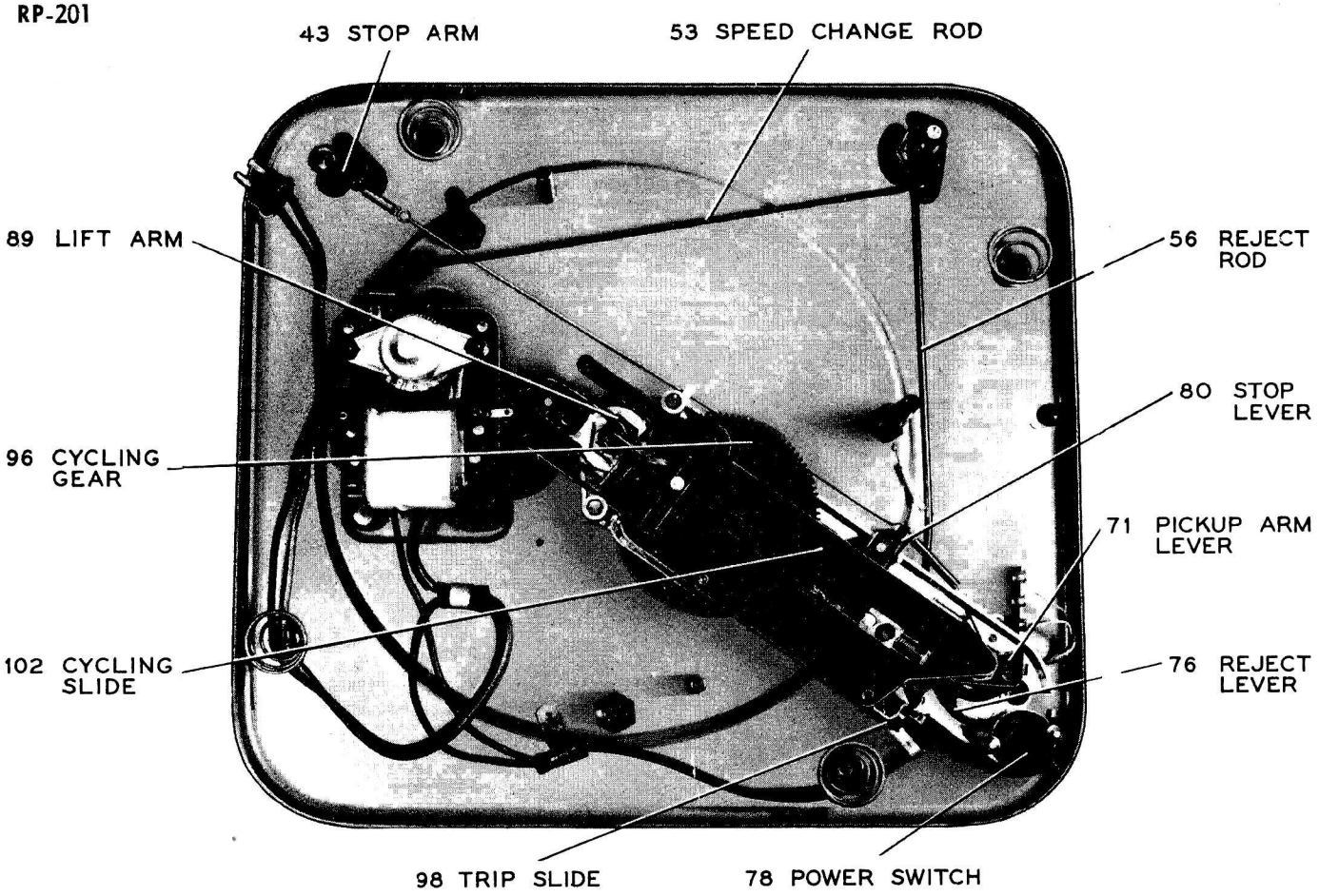

Fig. 1

FUNCTION OF PRINCIPAL LEVERS

See Fig. 1

Reject rod (56)

The function of the reject rod is to transfer the action from the control knob to the reject lever.

Trip slide (98)

The function of the trip slide is to transfer the movement of the pickup arm lever to the lower trip pawl. This action starts the change cycle.

Cycling gear (96)

The function of the cycling gears is to transfer the rotating motion of the turntable to the cycling mechanism.

Stop arm (43)

When the last record of the stack drops to the turntable, the record support arm drops. The lower end of the record support arm pivot actuates the stop lever thereby transferring the action for automatic stopping.

Lift arm (89)

The function of the lift arm is to transfer the movement of the cycling slide to the separator mechanism inside the centerpost.

Stop lever (80)

The function of the stop lever is to raise the trip slide and form a stop for pickup arm return lever. This results in the mechanism stopping automatically.

Cycling slide (102)

The function of the cycling slide is to transfer the action from the cycling gear to the other levers.

See Figs. 1 and 4

Pickup arm lever (71)

The function of the pickup arm lever is to transfer movement of the pickup arm to levers located beneath the motorboard. Other levers beneath the motorboard also counter react through the pickup arm lever thereby directing the movement of the pickup arm.

Reject lever (76)

The function of the reject lever is to actuate the power switch and trip slide.

See Fig. 2

Twelve-inch indexing lever (61)

After the completion of each change cycle of the mechanism, the pickup arm automatically is indexed for ten-inch records unless a twelve-inch record has dropped to the turntable. As a twelve-inch record drops to the turntable, it moves the twelve-inch indexing lever thereby directing the position of the selector lever.

See Fig. 3

Trip pawl (upper) (94)

The upper trip pawl functions as an actuating device for the cycling engagement pawl.

Cycling engagement pawl (96A)

The function of the cycling engagement pawl is to engage the off-set in the turntable shaft thereby starting change cycle.

See Fig. 4

Pickup arm return lever (68)

The function of the pickup arm return lever is to provide the force necessary to move the pickup into landing position.

Selector lever (83)

The function of the selector lever is to form a stop for the pickup arm return lever. The position of selector lever (up or down) determines whether the pickup lands on ten- or twelve-inch records.

Trip pawl (lower) (97)

The lower trip pawl transfers the action of the trip slide from the lower to the upper side of the cycling gear.

(See Exploded View—Fig. 6)

Record support (overarm) (1)

The function of the record support is to stabilize and hold the records in a horizontal plane which is parallel to the motorboard. After the last record of the stack drops to the turntable, the pivot of the record support drops down and actuates the automatic stopping device.

Center post (34)

The function of the center post is to support the stack of records. It also houses the separating mechanism.

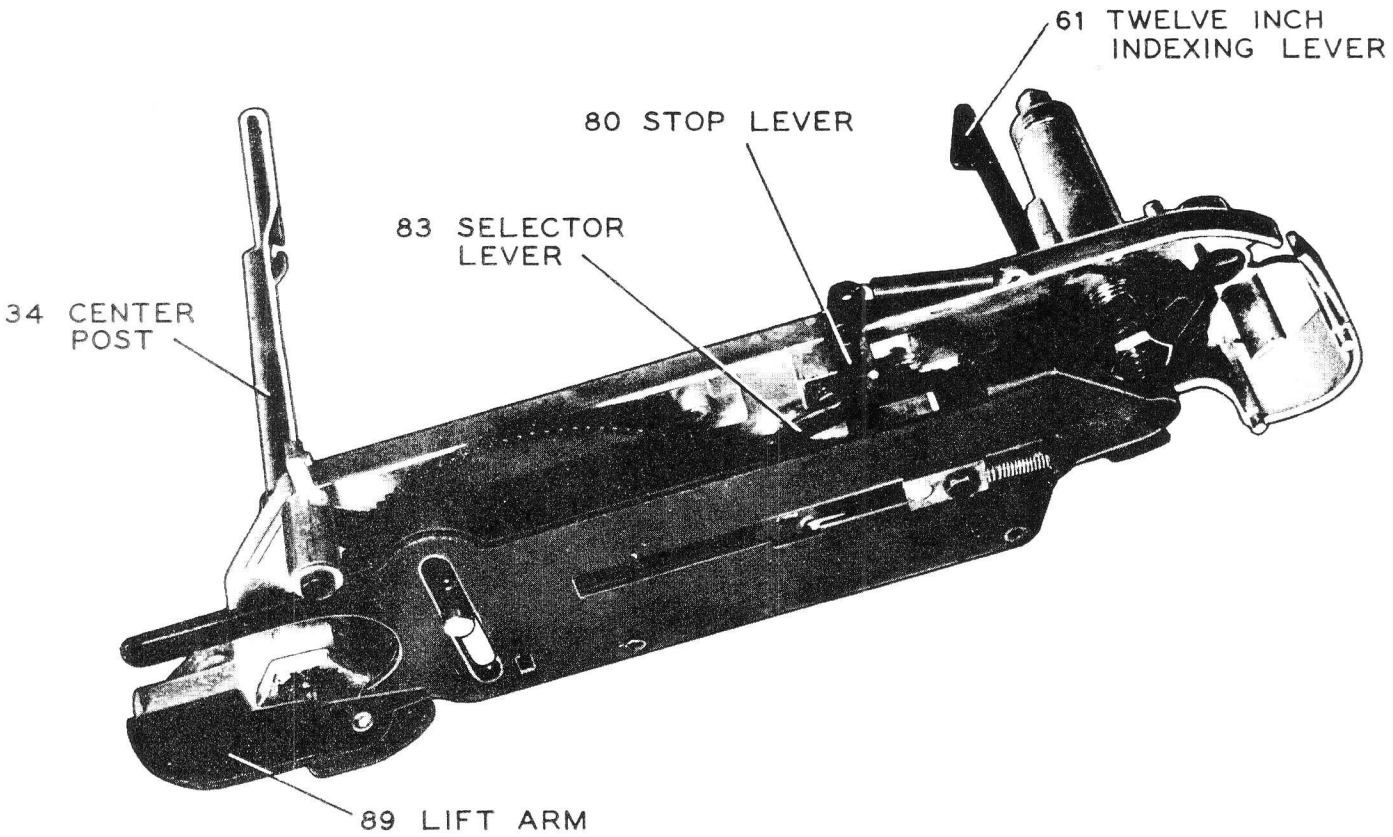

Fig. 2

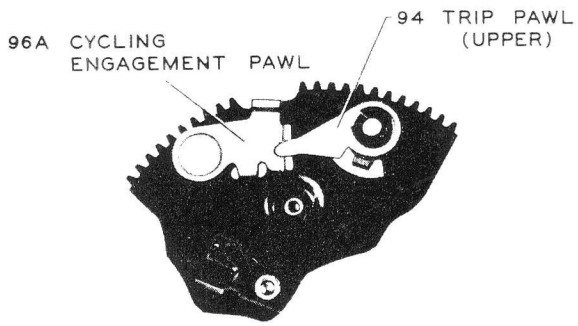

Fig. 3

Fig. 4

CYCLE OF OPERATION

NOTE: In the cycle of operation it is assumed the mechanism has stopped automatically (out of cycle) with the pickup arm on the rest.

Function	Description
Place a stack of records over the center post (intermixed if so desired). Place the record support over the center post.	1. The stack of records rests on the step in the centerpost (34). 2. The hole in the end of the record support (1) permits the end of the support to slide over the center post and rest on the stack of records.
Turn the speed selector knob to 78 or 33-1/3 rpm position.	1. The speed change is accomplished by shifting to either of two shafts on the motor assembly which are rotating at different speeds. The additional shaft is connected by a small rubber belt.
Rotate the knobs to select the proper stylus.	1. The rotation of the stylus knob (3) selects the proper stylus depending on the type of record to be played.
Rotate function control knob to reject position and release.	1. The function control knob, through the linkage of the function control arm (55), reject rod (56), and reject lever (76) actuates the power switch and the trip slide (98).

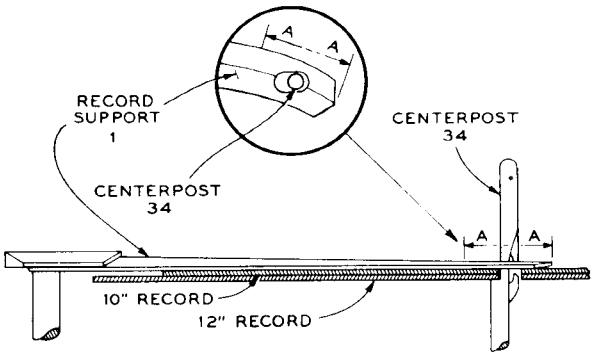

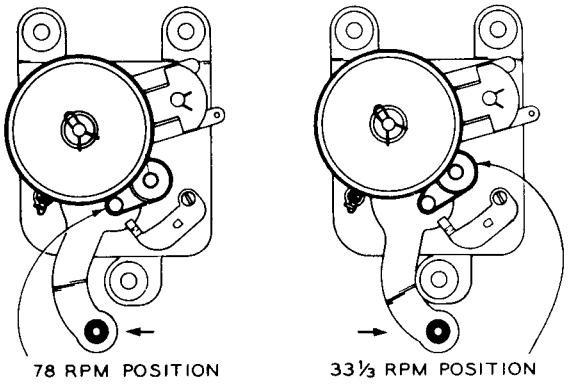

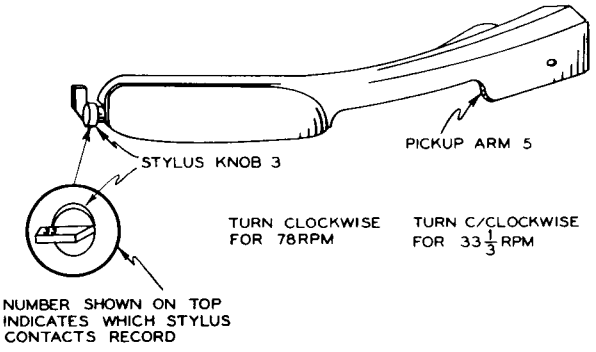

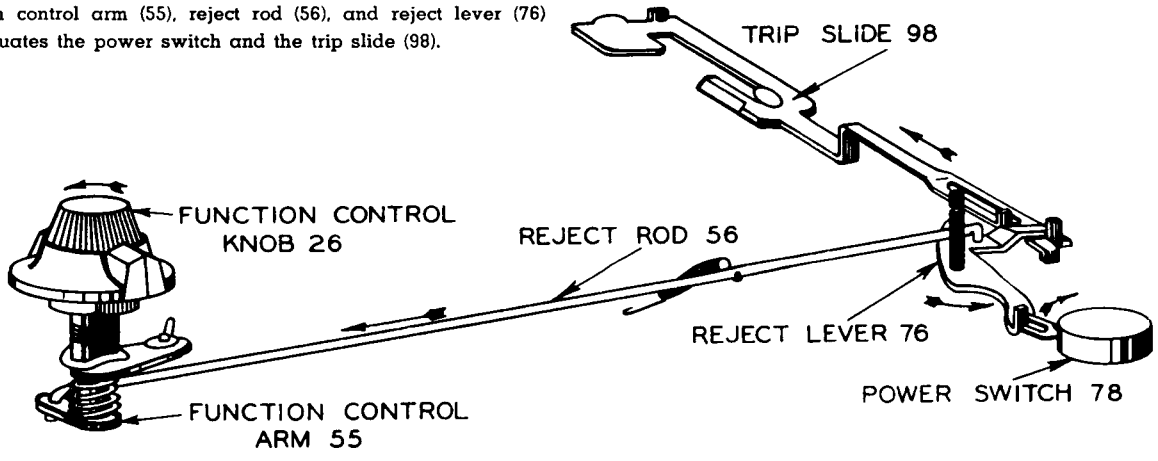

Cycling starts.

1. The closing of the power switch starts the turntable rotating.
2. The trip slide (98) in its movement contacts the lower trip pawl (97) and moves both the lower and the upper trip pawls which are tied together. The movement of the upper trip pawl (94) actuates the cycling engagement pawl (96A) sufficiently to cause engagement with the off-set on the rotating turntable shaft.
3. The contact between the cycling engagement pawl (96A) and the off-set on the turntable shaft gives the necessary push for the teeth in the cycling gear (96) to engage the teeth in the shaft of the turntable thereby starting change cycle.

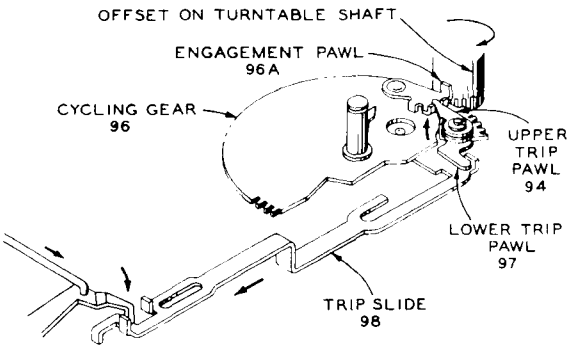

Pickup rises and remains outside turntable area.

1. As the cycling gear rotates, the stud (96B) mounted on the underside of the gear, rides inside a slot cut in the cycling slide (102).
2. The rotation of the cycling gear pushes the cycling slide back and forth.
3. As the slide moves away from the center post, an incline formed on the end of the slide causes the elevating rod (24) to raise and lift the pickup arm.
4. At the same time the elevating rod is pushed upward, the pickup arm lever (71) is also carried along from the force transferred through the spring (73). The raising of the pickup arm lever causes the two dimples formed in the pickup arm lever to engage the two holes in the pickup arm return lever (68) and couple them together. This stabilizes and directs the movement of the pickup arm during change cycle.
5. The cycling slide continues to move away from the center post until the formed end of the slide pushes against the pickup arm return lever. This relieves the force of pickup arm return lever against stop lever (80). This permits the stop lever return spring (85) to expand and return the stop lever to normal position.
6. The end (80A) of stop lever (80) pushes trip slide back ready for the next change cycle.

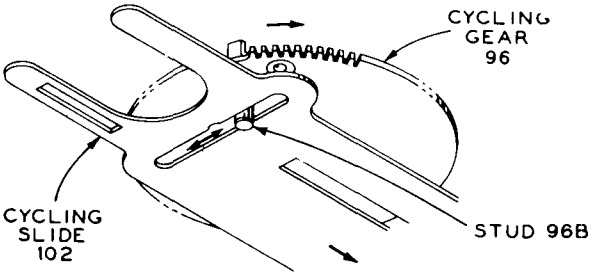

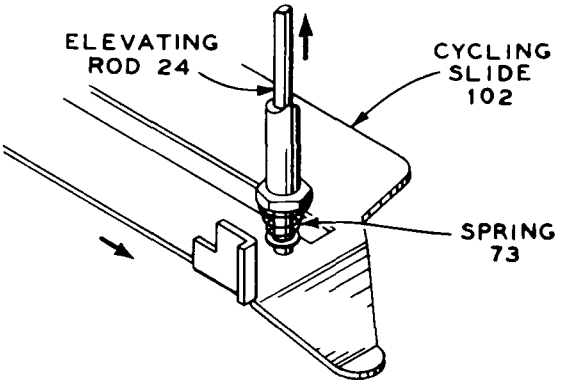

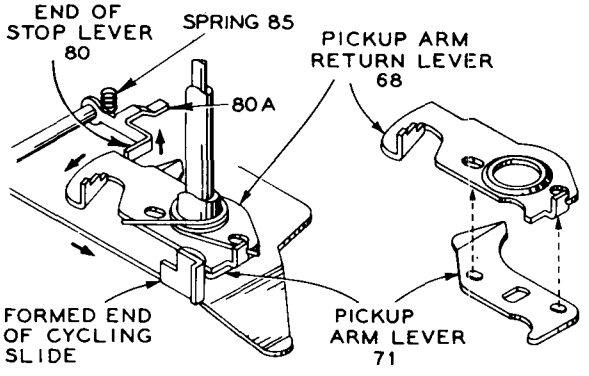

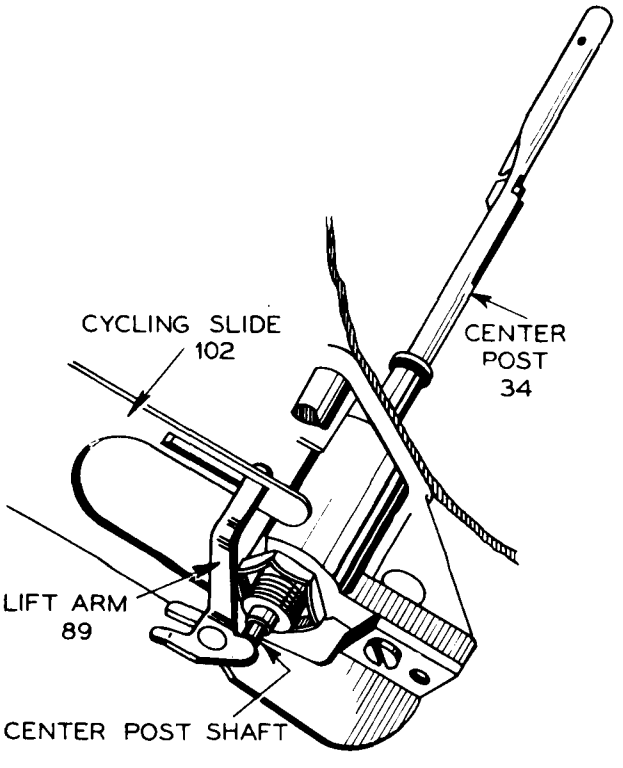

Record drops to turntable.

1. Further movement of the cycling slide causes the slot in the end of the cycling slide to actuate the lift arm (89).
2. The lift arm pushes up on the shaft extending from the bottom end of the center post. This shaft actuates the push off mechanism inside the center post, and the record drops to the turntable.

3. At this time the tab (96C) on cycling gear pushes down on one end of the selector lever (83) (which is pivoted in the center) thereby raising the other end causing it to latch on the edge (61A) of the twelve-inch indexing lever (61).

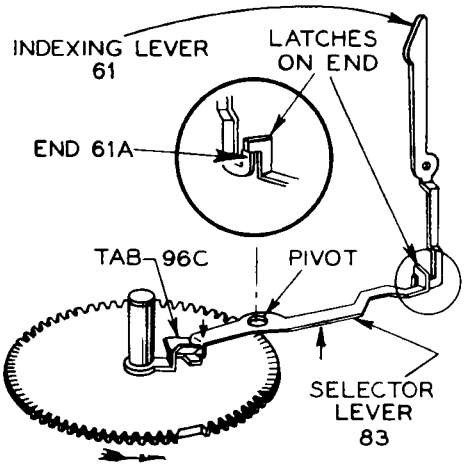

The pickup moves in for landing.

1. As the cycling slide returns, the formed edge (102A) on the slide moves back permitting the pickup arm return lever spring (66) to expand. This causes the pickup arm return lever (68) to move the pickup inward until the pickup arm return lever comes against the selector lever (83). The pickup is now directly above the point of landing.

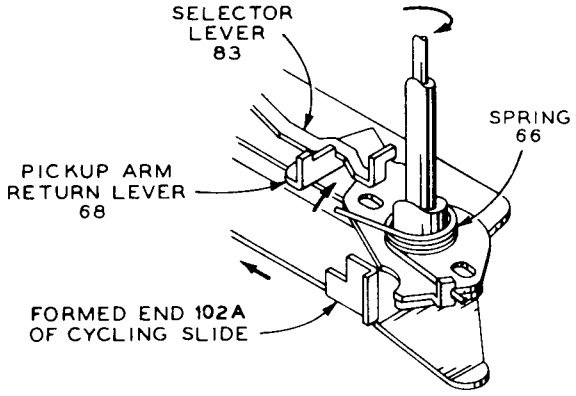

Pickup sits on record.

1. The elevating rod (24) slides down the incline on the slide permitting the pickup to sit on the start of the record.

NOTE:—12" indexing.

The mechanism automatically is indexed for the pickup to land on a ten-inch record, each time the mechanism goes through change cycle, unless a twelve-inch record contacts indexing lever (61) as its drops to the turntable. On each revolution of the cycling gear (complete change cycle) the tab (96C) pushes down on the selector lever (83) and the other end of the selector lever latches on the top edge (61A) of the twelve-inch indexing lever. Under these conditions the pickup will land correctly on a ten-inch record. On the other hand if a twelve-inch record drops to the turntable, it strikes the indexing lever on the way down. This permits the end of the selector lever (83) to drop down futther into the recess (61B). The lower step of the pickup arm return lever makes contact with the selector lever and the pickup will land correctly on a twelve-inch record.

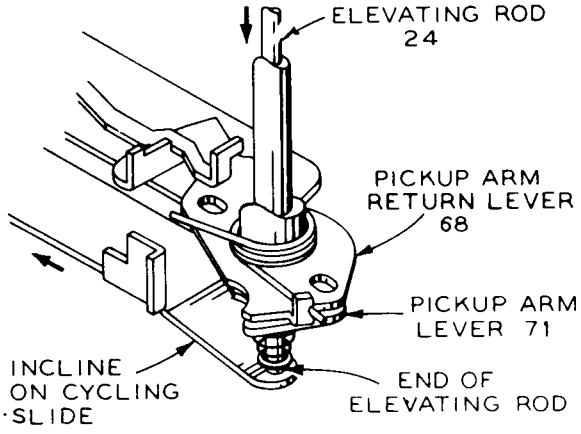

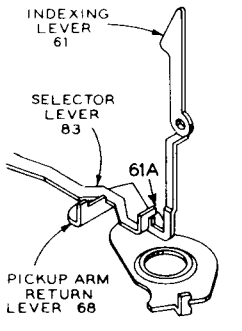

10" RECORD POSITION

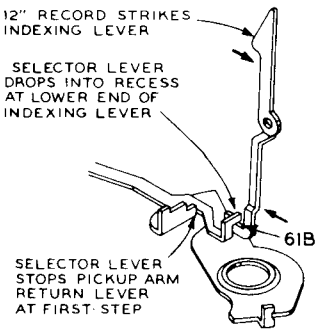

12" RECORD POSITION

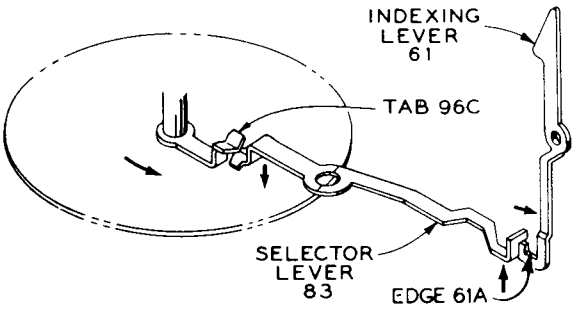

Mechanism completes cycle.

1. Just before the cycling gear completes cycle, a small tab (102D) on cycling slide makes contact with lower trip pawl (97) thereby moving upper trip pawl (94) and cycling engagement pawl (96A) back. This prevents the re-engagement with the off-set on the turntable shaft which would start a new change cycle.
2. The cycling gear comes to rest as the stud sliding in the cycling slide drops into a small indentation (102B) in the slide. The cut away section of the gear is in position so the gear on the turntable shaft is free to rotate.

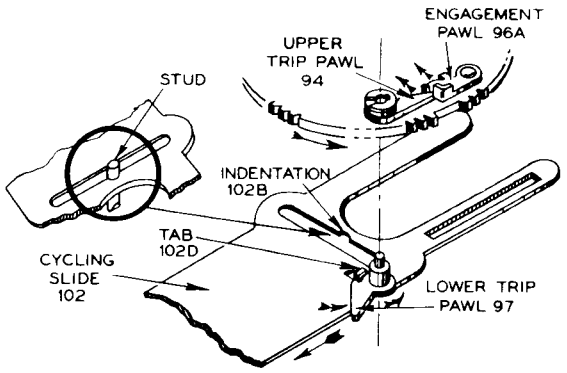

Record plays.

1. As the record plays, the pickup moves in toward the center of the record carrying the trip slide along. This is due to the contact made with the pickup arm lever which is rotating with the pickup arm pivot.
2. The trip slide contacts the lower trip pawl and both the lower and upper trip pawls and the cycling engagement pawls move slightly with each revolution of the record. This slight movement of the pawls is reversed each time the off-set on the turntable shaft comes in contact with the cycling engagement pawl. The back movement is taken up in the friction connection between the upper and lower trip pawls.
3. This action continues as long as the pickup moves in at a constant rate of speed. When the stylus leaves the recorded section of the record, the rapid acceleration results in the rapid movement of the cycling engagement pawl. The cycling engagement pawl assumes such a position that the off-set on the turntable shaft makes a positive contact and the cycling cam is pushed sufficiently for engagement between the teeth of the cycling gear and the teeth in the turntable shaft. This starts change cycle.

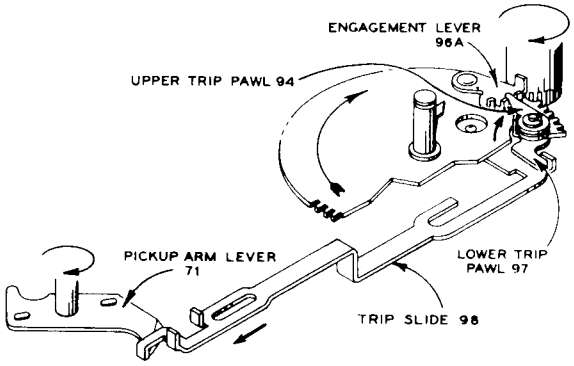

Pickup raises and moves out.

1. After the mechanism has been tripped the pickup arm moves out from action of the cycling slide (102) on the pickup arm lever (71).
2. The mechanism again follows the preceding sequence of dropping and playing the records until the last record of the stack has been played.

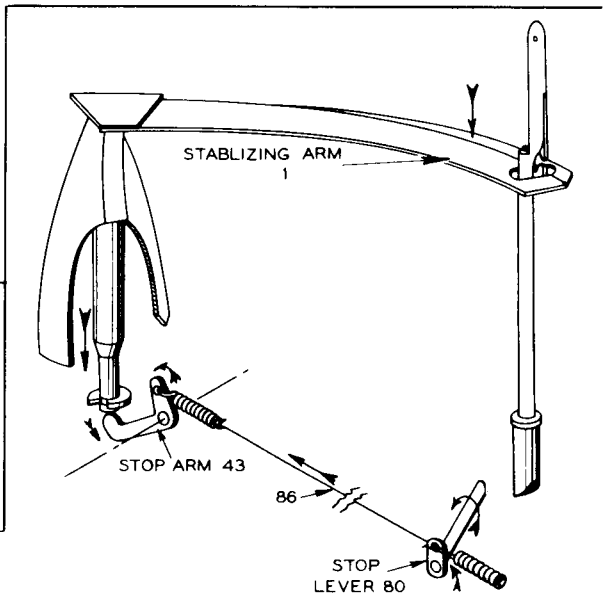

Mechanism stops automatically.

1. After the last selection has been played and the mechanism again goes into change cycle, the record support drops and actuates stop arm (43).
2. The stop arm movement is transferred through a connecting wire (86) to stop lever (80) causing it to raise.
3. As the stop lever raises the end (80A) lifts one end of trip slide. The other end (80C) of stop lever rises and forms a stop for pickup arm return lever preventing the pickup from moving in for landing.
4. The cycling slide has moved away from the center post permitting the lower end (80B) of stop lever to drop down through a small square cut in the cycling slide. After the end of the stop lever drops through the square opening, it slides along a channel cut in the slide which prevents it from raising until the slide returns.

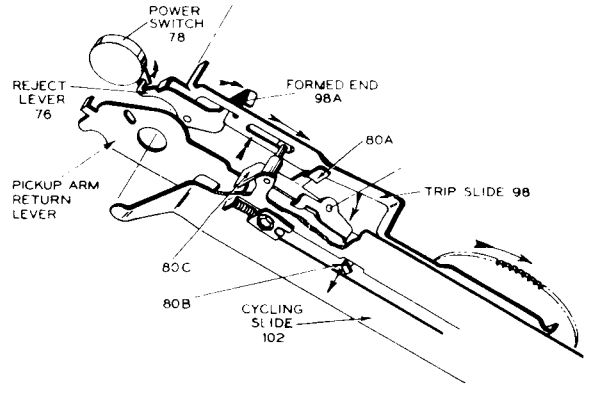

5. As the cycling slide moves back, it carries the raised trip slide along until finally the formed end (98A) of the trip slide (98) pushes reject lever which in turn actuates the power switch (78). This removes the power from the drive motor and mechanism stops.
6. The elevating rod (24) lowers the pickup arm to the rest.
7. As the cycling gear comes to rest, a small tab (102C) on cycling slide contacts and moves lower and upper trip pawls and cycling engagement pawl back to prevent engagement with off-set on turntable shaft. This prevents starting a change cycle if power would be applied to drive motor.

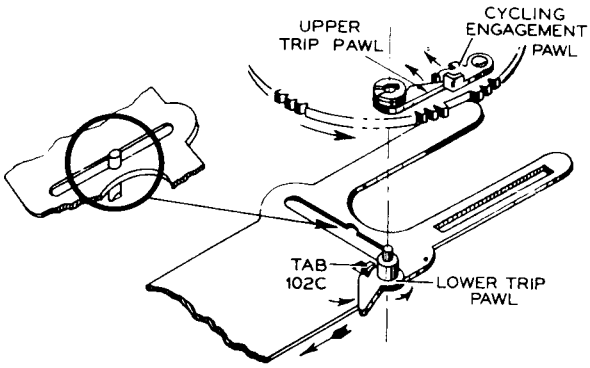

SERVICE HINTS

Pickup Arm Strikes Record on Center Post

PICKUP HEIGHT ADJUSTMENT SET TOO HIGH

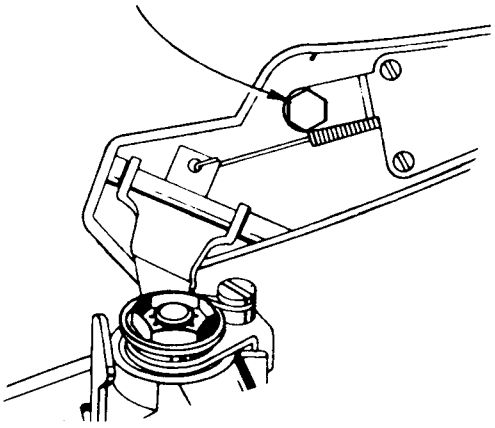

Speed Change Control Fails to Function

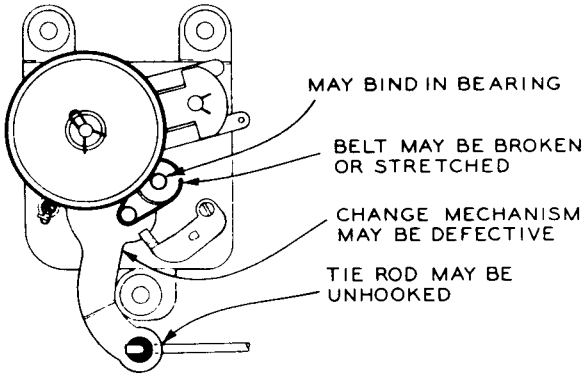

Pickup Skips Grooves

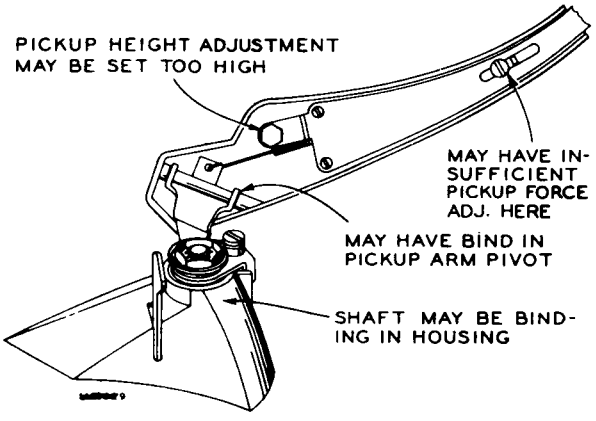

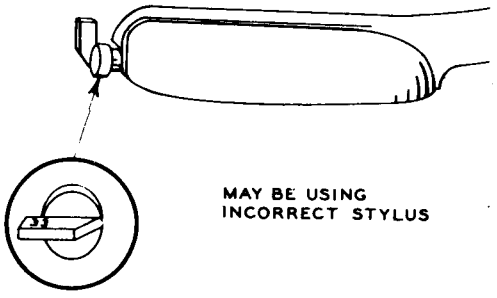

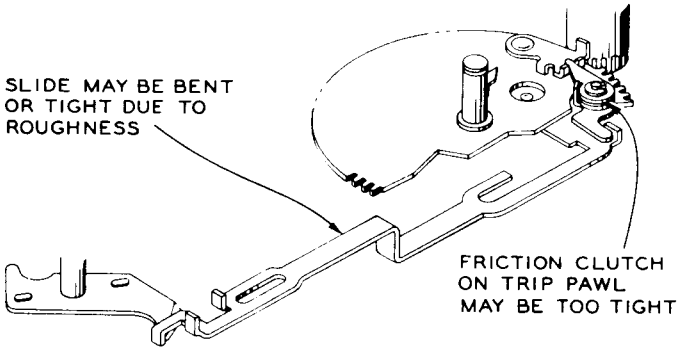

"Wow" or Speed Variation

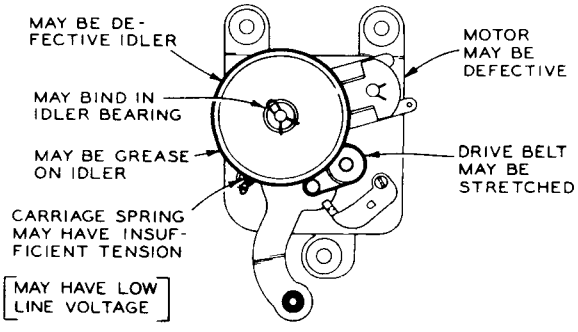

SERVICE HINTS (Continued)

Mechanism Fails to Trip

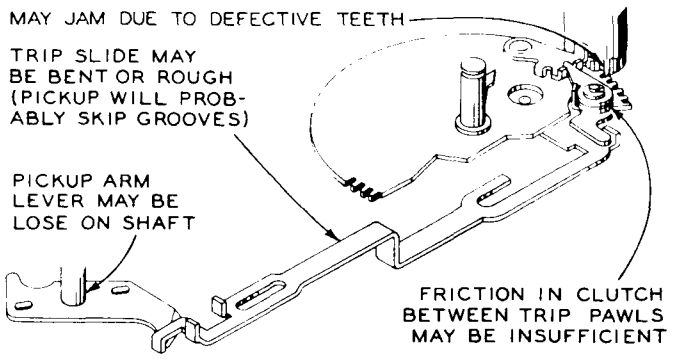

Premature Tripping

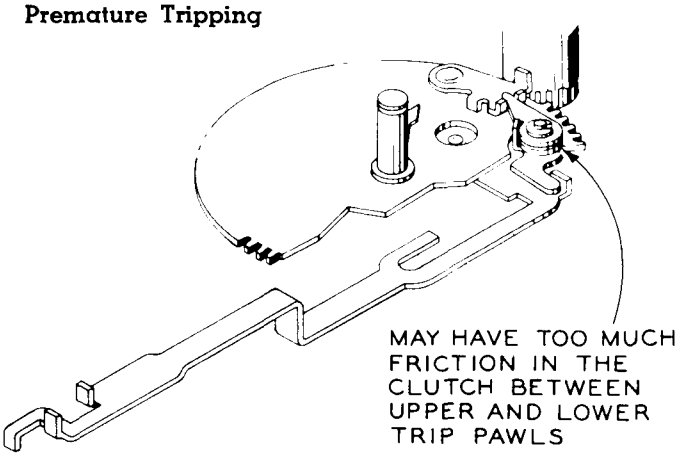

Pickup Sets Down on Rest Instead of Record

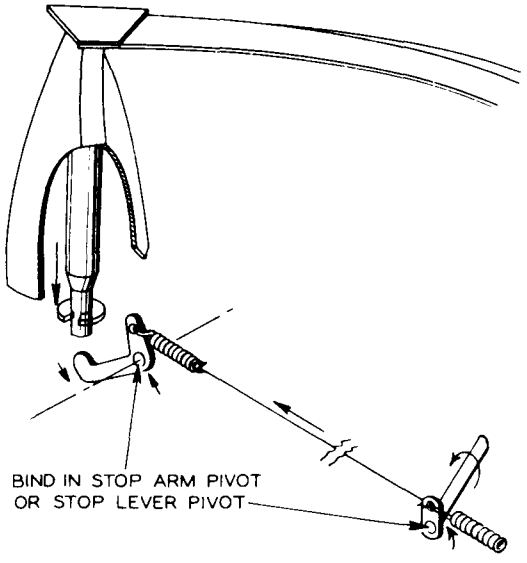

Mechanism Fails to Stop Automatically

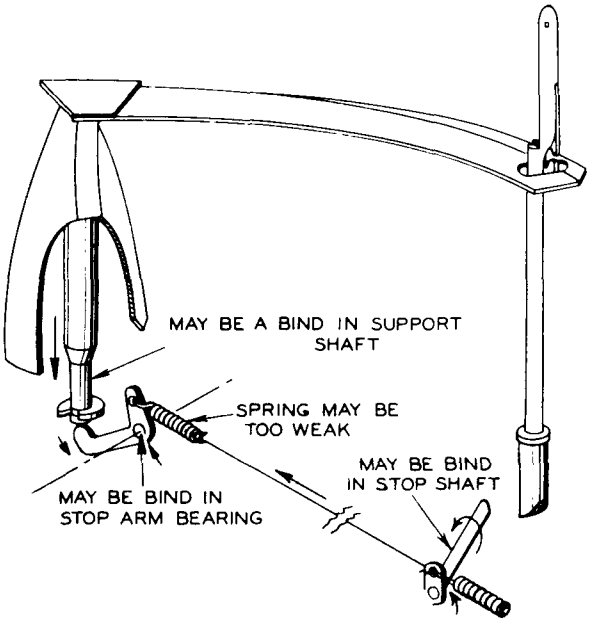

Mechanism Trips Continuously

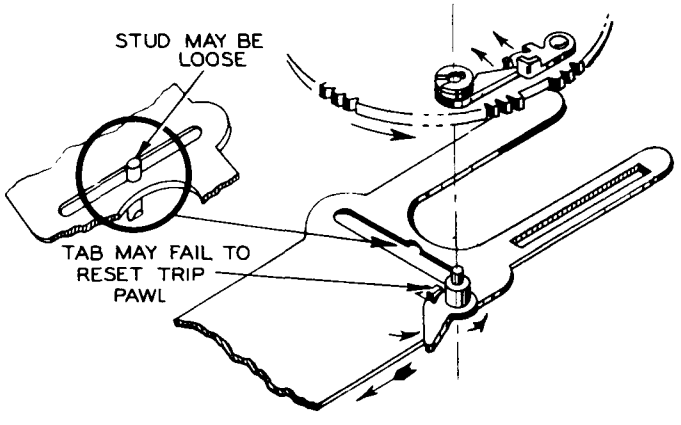

Failure to Separate Records Properly

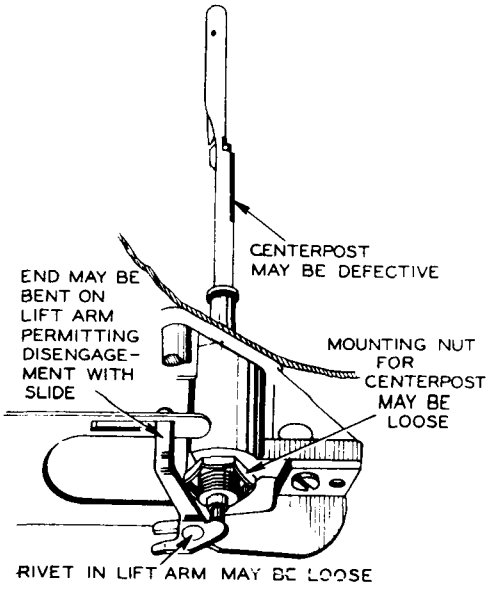

SERVICE HINTS (Continued)

Reject Control Fails to Function

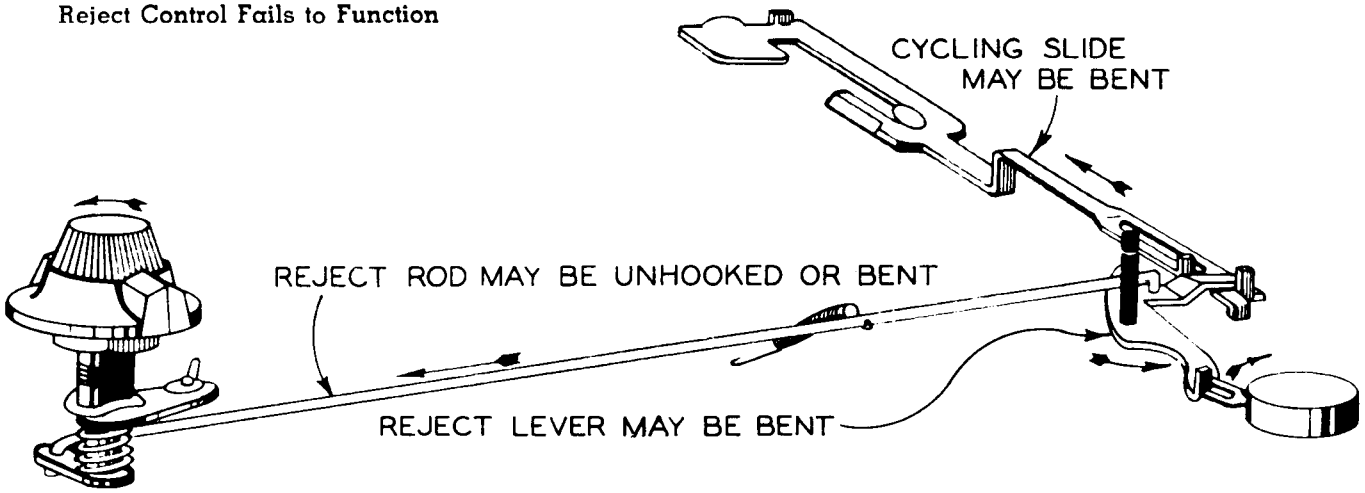

Pickup Fails to Land Properly

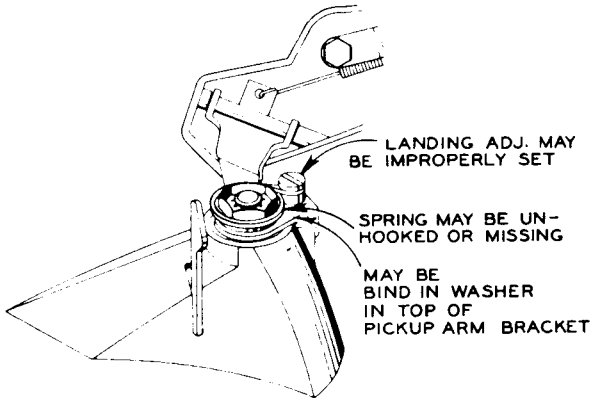

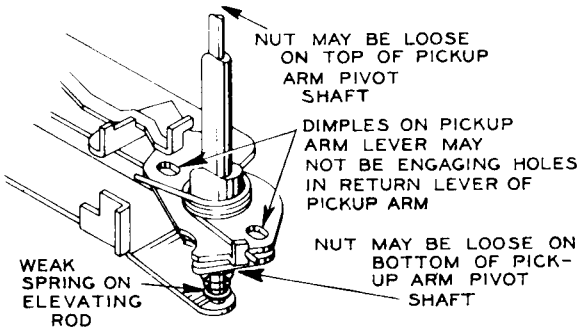

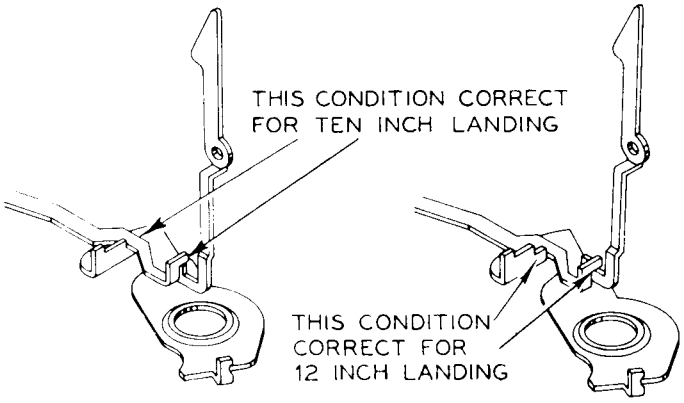

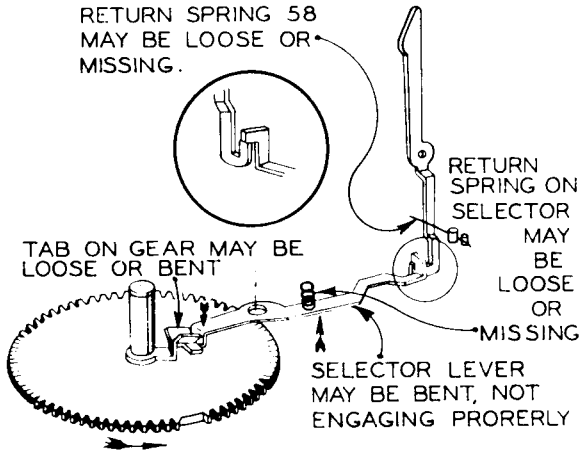

Distorted or No Output

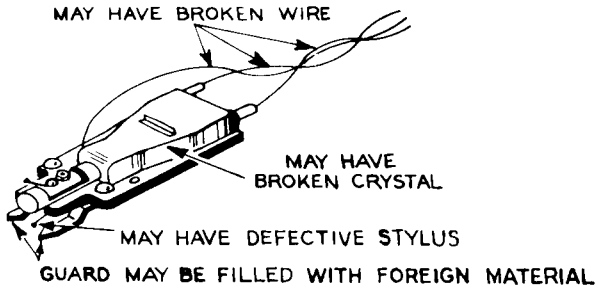

Removing Stylus

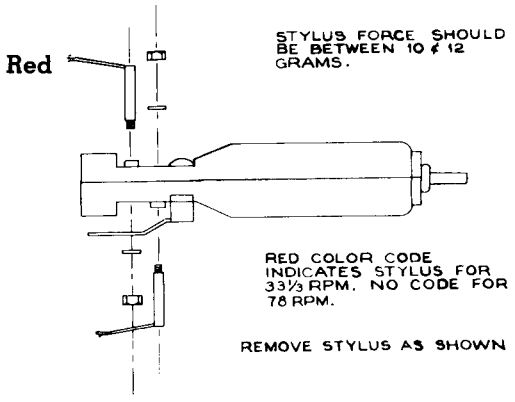

ADJUSTMENTS

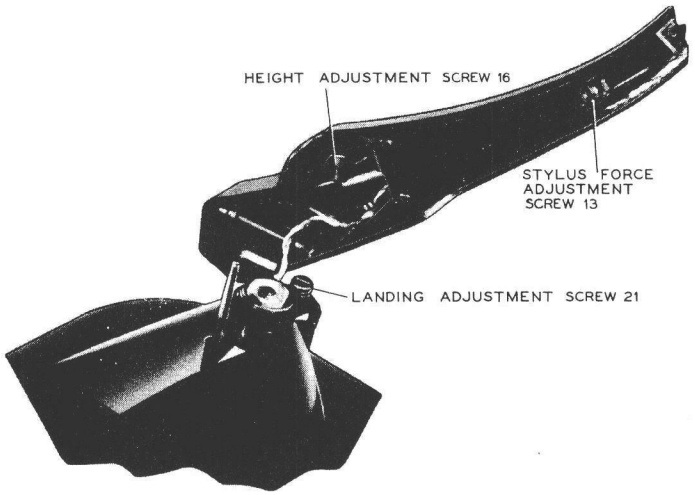

Landing Position—The landing position of the stylus is adjusted by means of the landing adjustment screw (21) mounted on the pickup arm support bracket assembly. Turn the screw for correct landing on 10" records and the 12" adjustment should automatically be correct.

Pickup Arm Height—The pickup arm height is adjusted by screw (16) located inside the pickup arm. To raise pickup arm turn screw counterclockwise to lower arm turn screw clockwise. The pickup arm height should be adjusted so that with a 1⅛" stack of records the pickup arm lifts ¼" straight up as the change cycle starts.

Stylus Force—Stylus force should be ten to twelve grams. Loosen screw (13) and move slide back and forth until the correct stylus force is obtained.

DO YOU KNOW?

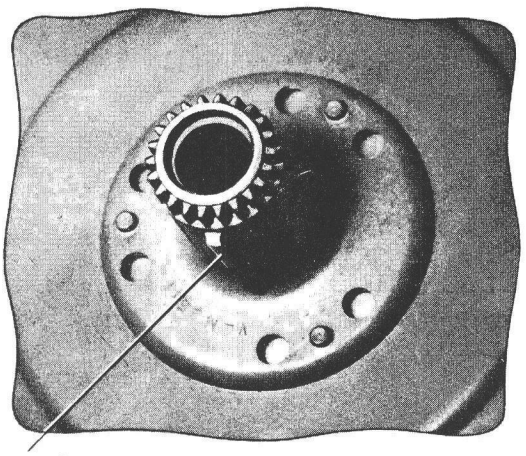

THE "OFFSET" CONTACTS ENGAGEMENT PAWL #96A CAUSING THE GEARS OF THE TURNTABLE SHAFT AND CYCLING CAM TO ENGAGE AND CARRY THE MECHANISM THROUGH CYCLE

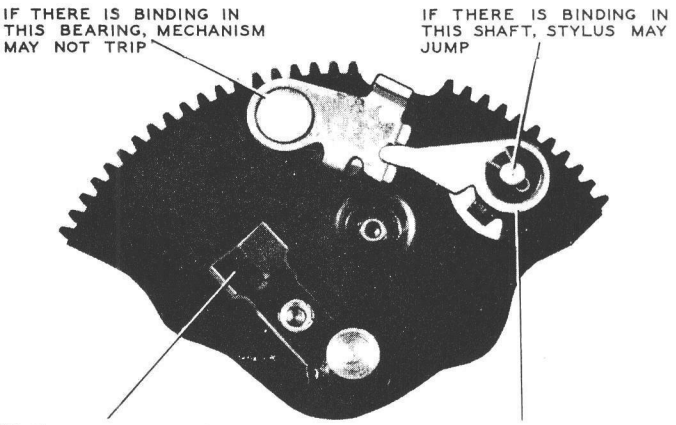

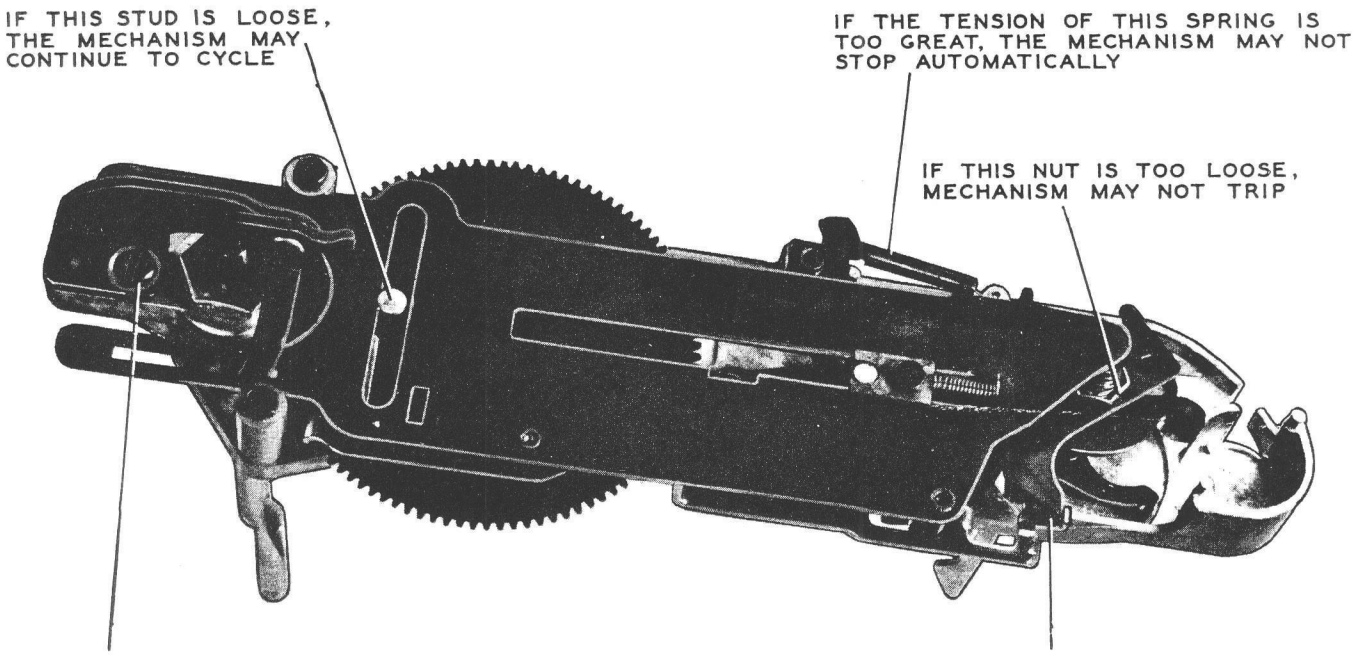

DO YOU KNOW?

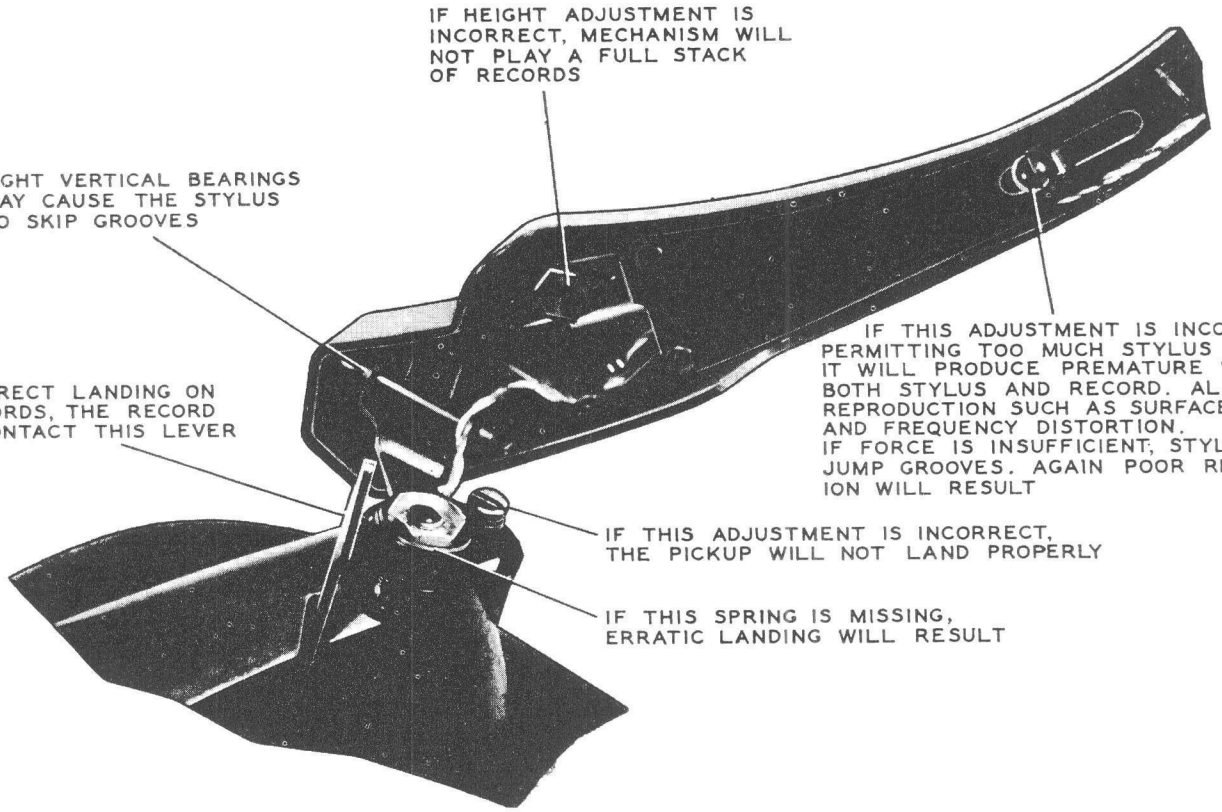
IF HEIGHT ADJUSTMENT IS INCORRECT, MECHANISM WILL NOT PLAY A FULL STACK OF RECORDS
TIGHT VERTICAL BEARINGS MAY CAUSE THE STYLUS TO SKIP GROOVES
IF THIS ADJUSTMENT IS INCORRECT, PERMITTING TOO MUCH STYLUS FORCE IT WILL PRODUCE PREMATURE WEAR ON BOTH STYLUS AND RECORD. ALSO POOR REPRODUCTION SUCH AS SURFACE NOISE AND FREQUENCY DISTORTION. IF FORCE IS INSUFFICIENT, STYLUS MAY JUMP GROOVES. AGAIN POOR REPRODUCTION WILL RESULT
FOR CORRECT LANDING ON 12" RECORDS, THE RECORD MUST CONTACT THIS LEVER
IF THIS ADJUSTMENT IS INCORRECT, THE PICKUP WILL NOT LAND PROPERLY
IF THIS SPRING IS MISSING, ERRATIC LANDING WILL RESULT

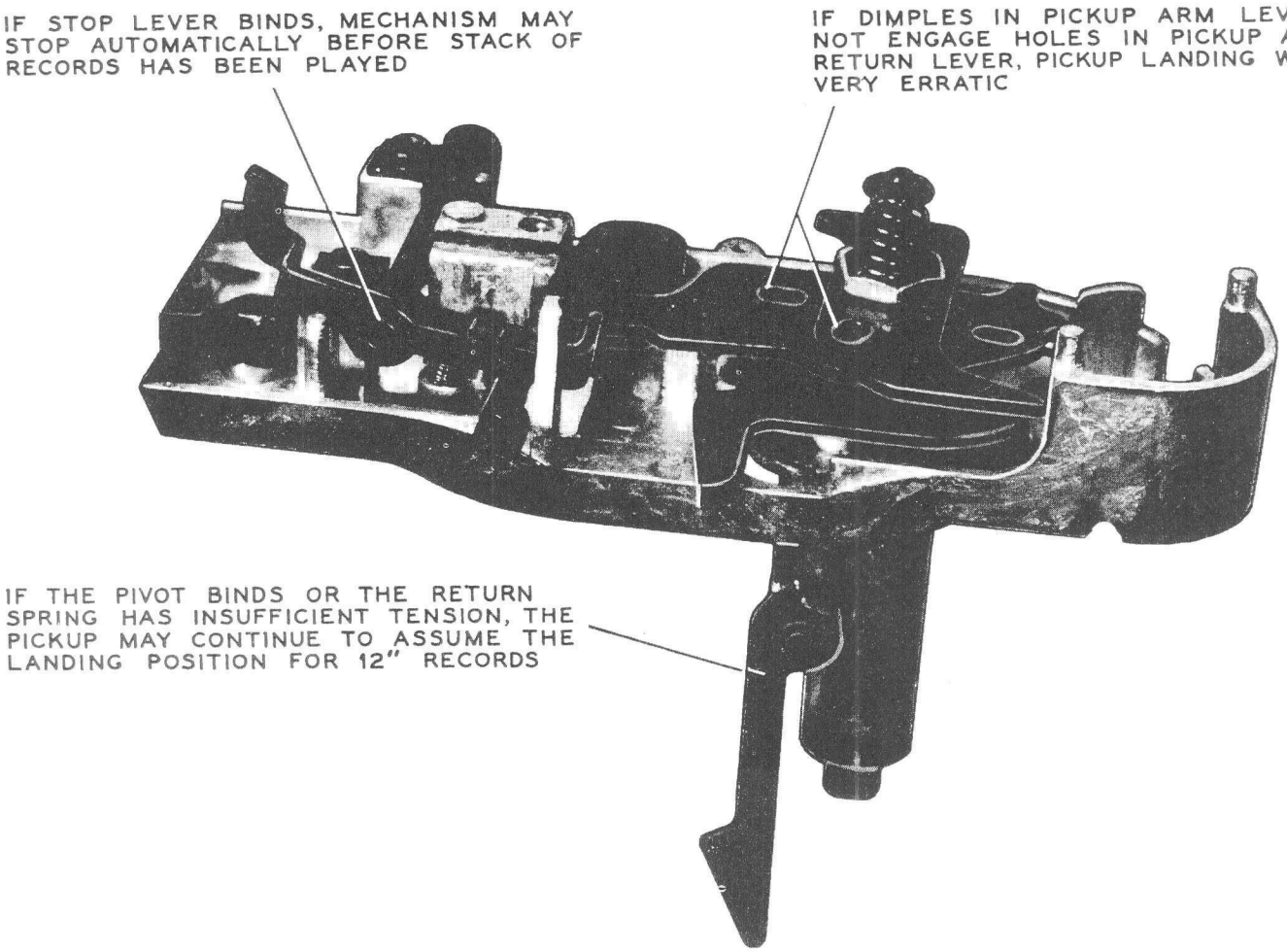
IF STOP LEVER BINDS, MECHANISM MAY STOP AUTOMATICALLY BEFORE STACK OF RECORDS HAS BEEN PLAYED
IF DIMPLES IN PICKUP ARM LEVER DO NOT ENGAGE HOLES IN PICKUP ARM RETURN LEVER, PICKUP LANDING WILL BE VERY ERRATIC
IF THE PIVOT BINDS OR THE RETURN SPRING HAS INSUFFICIENT TENSION, THE PICKUP MAY CONTINUE TO ASSUME THE LANDING POSITION FOR 12" RECORDS

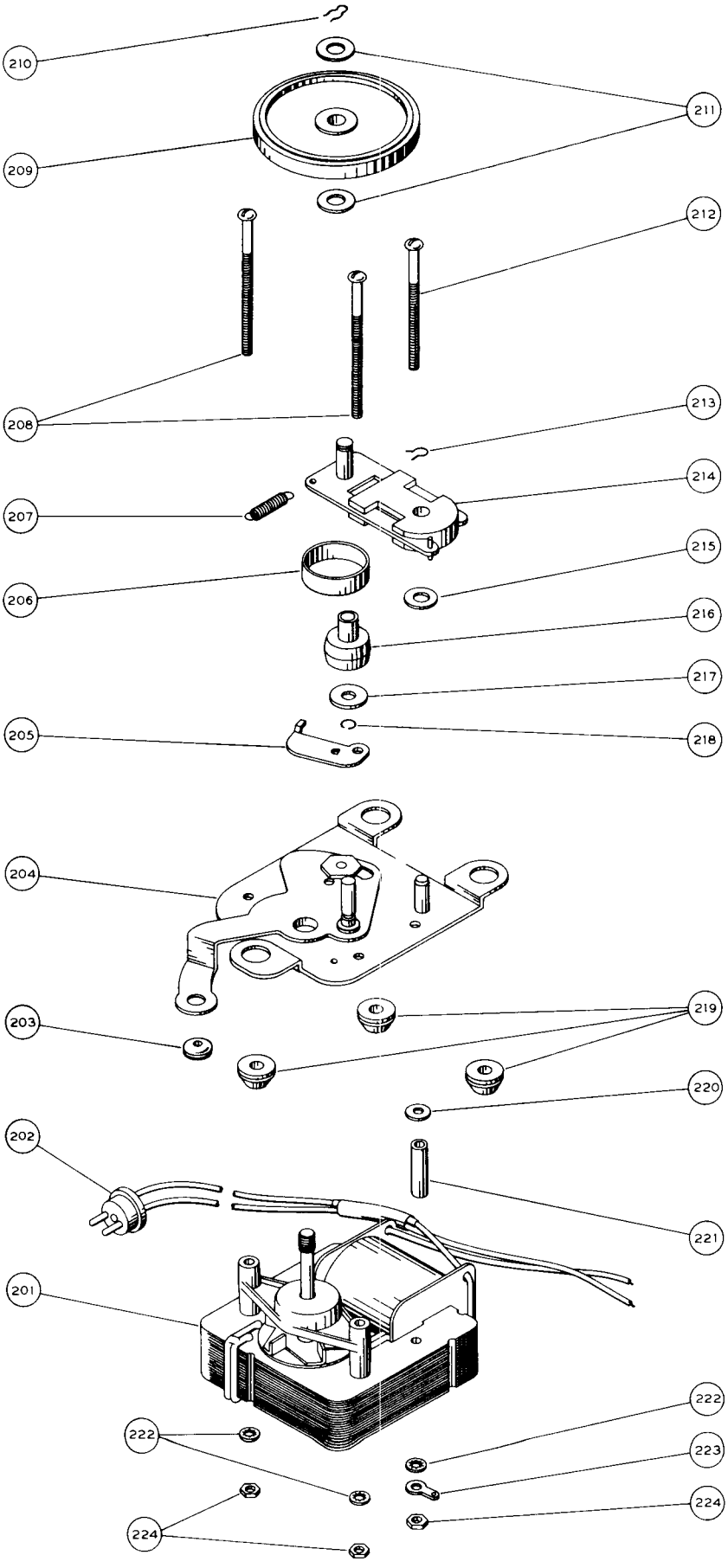

Exploded View of Motor (60 cycles)—Fig. 5

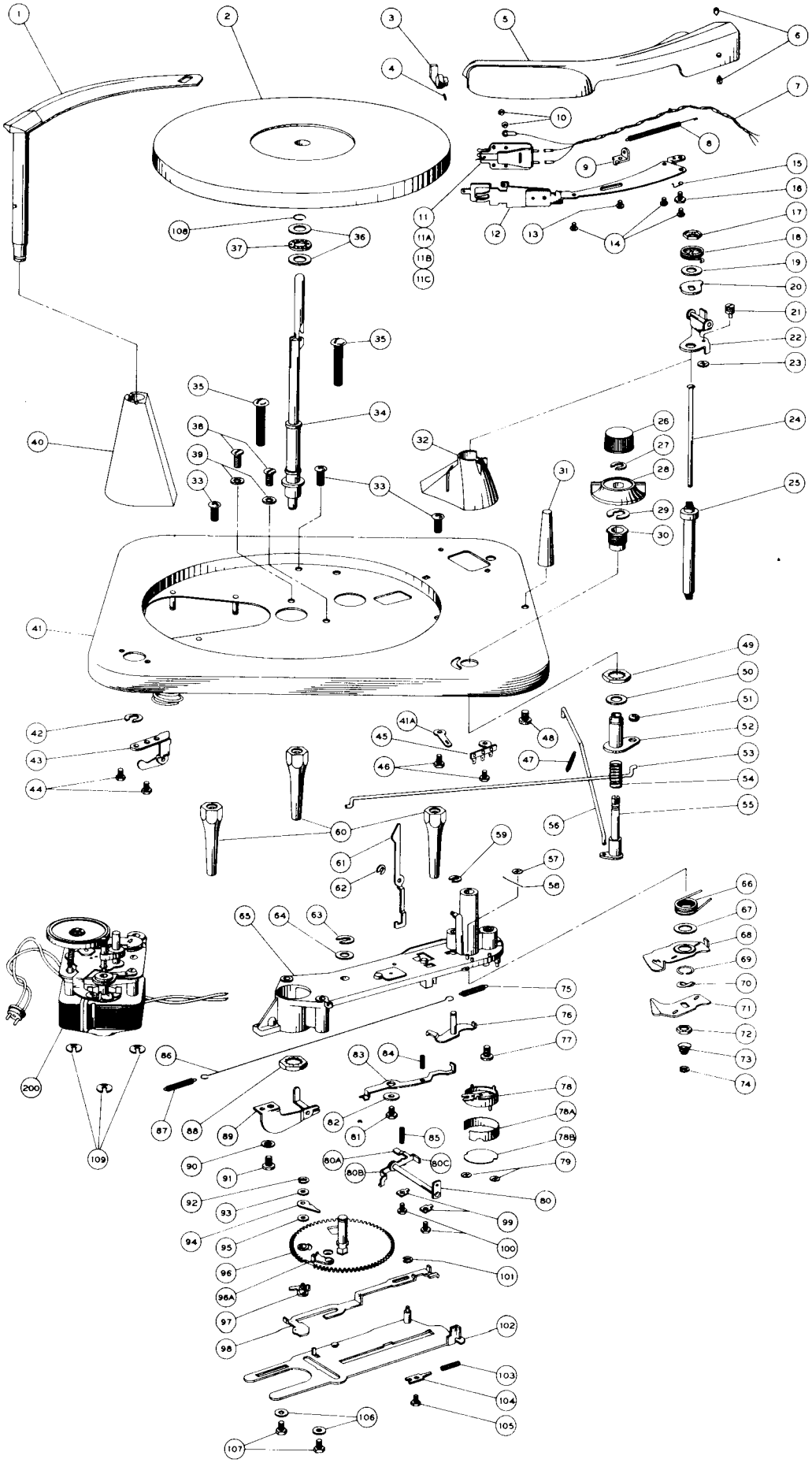

Exploded View of Entire Mechanism—Fig. 6

REPLACEMENT PARTS

ILL. NO.	STOCK NO.	DESCRIPTION
1	75802	Support—Record support complete with plastic cap (maroon) and pin for 960284-1
1	75803	Support—Record support complete with plastic cap (tan) and pin for 960284-2
1A	75804	Cap—Plastic cap (maroon) for record support assembly for 960284-1
1A	75805	Cap—Plastic cap (tan) for record support assembly for 960284-2
2	75806	Turntable—Turntable and hub assembly
3	75264	Knob—Stylus selector knob complete with screw Ill. #4
4	——	Screw—Screw for stylus selector knob (included in 75264, Ill. #3)
5	75807	Arm—Pickup arm shell only complete with "RCA Victor" emblem
6	75357	Pivot—Pickup arm pivot (2 required)
7	75808	Cable—Three (3) wire pickup cable complete with connectors
8	75809	Spring—Pickup arm counterbalance spring (coil type)
9	75810	Bracket—Adjustment bracket for counterbalance spring
10	——	Screw—Mounting screw for crystal
11	75475	Crystal—Two-way (33⅓/78 RPM crystal complete with styluses
11A	75497	Stylus—Osmium tip stylus for 78 RPM section (not coded)
11B	75496	Stylus—Osmium tip stylus for 33⅓ RPM section (coded "red")
11C	74230	Nut—#00-112 nut and washer to mount stylus
12	75811	Mount—Crystal mount and swivel assembly
13	——	Screw—#6-32 x ⅛" round head machine screw to mount counterbalance spring adjustment bracket
14	71097	Screw—#4 x ¼" self tapping screw for crystal mount and swivel assembly
15	75812	Spring—Lock spring (coil type) for height adjustment screw
16	75813	Screw—Height adjustment screw (hex head)
17	——	Nut—Pal nut for mounting pickup arm bracket
18	75814	Spring—Tension spring (coil type) for landing adjustment stud
19	——	Washer—Metal (steel) washer for pickup arm pivot shaft (1/16" x ¼" I.D. x ½" O.D.)
20	75815	Cam—Landing adjustment cam
21	75816	Stud—Landing adjustment stud (eccentric)
22	75817	Bracket—Pickup arm mounting bracket complete with pin
23	75818	Nut—Speed nut for landing adjustment stud
24	75819	Rod—Elevating rod
25	75820	Shaft—Pickup arm pivot shaft and sleeve
26	75821	Knob—Function control knob (maroon) for 960284-1
26	75822	Knob—Function control knob (tan) for 960284-2
27	75399	Washer—"C" washer to mount function control arm and shaft assembly
28	75823	Knob—Motor speed control knob (maroon) for 960284-1
28	75824	Knob—Motor speed control knob (tan) for 960284-2
29	75825	Washer—"C" washer to mount motor control arm and shaft assembly
30	75826	Bushing—Threaded bushing for control shaft
31	75827	Rest—Pickup arm rest (maroon) for 960284-1
31	75828	Rest—Pickup arm rest (tan) for 960284-2
32	75829	Housing—Pickup arm pivot shaft housing (plum hammertone) (die-cast) for 960284-1
32	75873	Housing—Pickup arm pivot shaft housing (light brown) (die-cast) for 960284-2
33	75830	Screw—#10 x ½ self-tapping cross-recessed head screw to mount plastic legs
34	75831	Spindle—Turntable spindle assembly
35	75377	Screw—Motorboard mounting screw (¼-20 x 1⅜" round head—special)
36	75354	Washer—Thrust washer for turntable bearing (2 required)
37	75355	Bearing—Thrust bearing
38	——	Screw—#10-24 x 5/16" pan head machine screw to mount die-cast sub-assembly
39	——	Lockwasher—#10 internal tooth lockwasher to mount die-cast sub-assembly
40	75832	Housing—Record support housing (plum hammertone) (die-cast) for 960284-1
40	75874	Housing—Record support housing (light brown) (die-cast) for 960284-2
41	——	Board—Motorboard (plum hammertone) complete with mounting springs, cable clamps and motor mounting studs for 960284-1
41	——	Board—Motorboard (light brown) complete with mounting springs, cable clamps and motor mounting studs for 960284-2
41A	——	Lug—Terminal lug
42	75385	Washer—"C" washer for record support shaft
43	75834	Arm—Stop arm assembly
44	——	Screw—#6 x 5/16" hex head self-tapping screw to mount record support housing and stop arm
45	——	Board—Terminal board (3 contact)
46	——	Screw—#6-32 x ¼" hex head self-tapping screw to mount terminal board and pick-up arm pivot housing
47	75401	Spring—Reject rod return spring (coil type)
48	75830	Screw—#10 x ½" self-tapping cross-recessed head screw to mount arm rest
49	——	Nut—Pal nut to mount threaded bushing Ill. #30
50	75835	Washer—Bronze washer for control shaft
51	75403	Grommet—Rubber grommet for motor speed control rod
52	75836	Arm—Motor speed control arm and shaft assembly
53	75837	Rod—Motor speed control rod
54	75838	Spring—Compression spring for control lever shaft (coil type)
55	75839	Arm—Function control arm and shaft assembly
56	75840	Rod—Reject rod
57	75841	Nut—Speed nut for 12" indexing lever return spring
58	75842	Spring—12" indexing lever return spring (formed)
59	75392	Washer—"C" washer for mounting reject lever
60	75843	Leg—Plastic leg
61	75844	Lever—12" indexing lever
62	75397	Washer—"C" washer for mounting 12" indexing lever
63	75373	Washer—"C" washer for mounting cycling gear
64	75845	Washer—Fibre washer for mounting cycling gear
65	75846	Casting—Main casting
66	75847	Spring—Pickup arm return lever spring (coil type)
67	75848	Washer—Fiber washer for pickup arm pivot shaft
68	75849	Lever—Pickup arm return lever
69	75850	Retainer—Retainer ring for pickup arm return lever
70	75851	Washer—Spring washer for pickup arm pivot shaft
71	75852	Lever—Pickup arm lever
72	——	Nut—Pal nut to fasten pickup arm lever
73	75854	Spring—Thrust spring (coil type) for elevating rod
74	75397	Washer—"C" washer for elevating rod
75	75855	Spring—Return spring (coil type) for stop lever
76	75856	Lever—Reject lever
77	——	Screw—#10-24 x 5/16" round head machine screw and lockwasher
78	75857	Switch—"On-Off" switch complete with insulating strip and cover
79	75841	Nut—Speed nut for fastening switch cover

REPLACEMENT PARTS—Cont.

ILL. NO.	STOCK NO.	DESCRIPTION
80	75858	Lever—Stop lever assembly (including 80A, B, C)
81	——	Screw—#6-32 x ¼" hex head screw for selector lever
82	——	Washer—Flat washer (steel) for mounting selector lever
83	75859	Lever—Selector lever
84	75860	Spring—Return spring (coil type) for selector lever
85	75861	Spring—Return spring (coil type) for stop lever
86	75862	Link—Control link
87	75863	Spring—Return spring (coil type) for stop arm
88	——	Nut—Pal nut for spindle
89	75864	Arm—Lift arm
90	——	Lockwasher—Internal teeth lockwasher (#10) for lift arm mounting screw
91	——	Screw—#10-24 x 5/16" round head machine screw for lift arm
92	75397	Washer—"C" washer for mounting trip pawl
93	75396	Washer—Fibre washer for trip pawl shaft
94	75865	Pawl—Trip pawl—upper
95	75395	Washer—Spring washer for trip pawl shaft
96	75866	Gear—Cycling gear complete with shaft and engagement lever
96A	——	Lever—Engagement lever—part of Ill. 96
97	75867	Pawl—Trip pawl—lower
98	75868	Slide—Trip slide
99	75869	Strip—Bearing strip for stop lever shaft
100	——	Screw—#4-40 x ¼" hex head screw for mounting stop lever shaft bearing strips
101	75397	Washer—"C" washer for mounting trip slide
102	75870	Slide—Cycling slide and cam assembly
103	75871	Spring—Stabilizing spring (coil type) for cycling slide
104	75872	Plate—Bearing plate for cycling slide
105	——	Screw—#6-32 x ½" hex head machine screw for mounting cycling slide bearing plate
106	——	Washer—Brass washer for cycling slide
107	——	Screw—#6-32 x ½" hex head machine screw for mounting cycling slide
108	75353	Retainer—Turntable spindle thrust bearing assembly retainer
109	75876	Washer—"C" washer for mounting motor
200	75333	Motor—117 volt, 60 cycle, complete with top plate, idler wheel and drive belt
	S-5917	25 Cycle Motor
202	30870	Connector—2 contact male connector for motor leads
203	75403	Grommet—Rubber grommet for motor speed change tie rod (2 req'd)
204	75426	Plate—Motor top plate including speed change carriage, 3 mounting grommets and 1 speed change lever grommet
205	75431	Plate—Friction guide plate
206	75376	Belt—Rubber belt for motor drive shaft
207	75383	Spring—Tension spring for idler wheel
208	——	Screw—#6-32 x 2" round head machine screw to mount top plate to motor
209	75382	Wheel—Idler wheel
210	75380	Spring—Hairpin spring for idler wheel
211	75433	Washer—Dampening washer for idler wheel (2 req'd)
212	——	Screw—#6-32 x 2⅛" round head machine screw to mount top plate to motor
213	75432	Spring—Hairpin spring to mount idler carriage
214	75430	Carriage—Idler carriage
215	75433	Washer—Fibre washer
216	75429	Pulley—Drive pulley and shaft assembly for 33⅓ RPM
217	75428	Washer—Felt washer
218	75427	Retainer—Retainer ring for drive pulley and shaft
219	75386	Grommet—Rubber grommet to mount motor (3 req'd)
220	——	Washer—Flat metal washer
221	——	Spacer—Metal spacer to mount top plate to motor
222	——	Lockwasher—#6 internal teeth
223	——	Lug—Terminal lug
224	——	Nut—#6 hex nut

LUBRICATION

The mechanism is properly lubricated when it leaves the factory, so no lubrication should be necessary for a long period of time. If, however, the mechanism has unusual use or high operating temperatures, it may be necessary to add additional lubrication.

It is suggested to use Lubriplate to

1. Pickup arm pivot.
2. Points of sliding contact with cycling slide, including:
   a. elevating rod
   b. lift arm
   c. roller on cycling cam
   d. pickup arm return lever
   e. pickup arm lever
3. End of selector lever contacting tab on cycling gear.
4. Turntable thrust bearing.
5. Sparingly on a trip slide.
6. All points of sliding contact.

Apply a small quantity of light machine oil #10 or Singer Sewing machine oil to:

1. Trip pawl pivot.
2. Cycling engagement pawl pivot.
3. Bearing of record support.
4. Elevating rod.
5. Bearing of lift arm.
6. Bearing of reject lever.
7. Bearing of stop lever.
8. Bearing of cycling gear.
9. Motor bearings.

NOTE: Keep oil or grease away from all rubber parts.

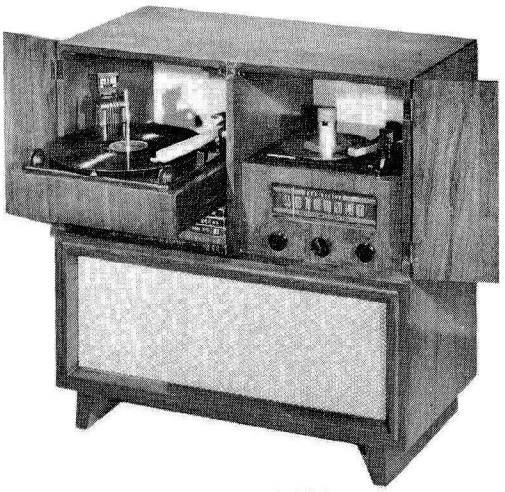

MODEL V-305

RCA VICTOR

"HIS MASTER'S VOICE"

RADIO-PHONOGRAPH COMBINATION

MODEL V305 SERVICE DATA

—1950 No. 15—

GENERAL SERVICE DIVISION
RCA VICTOR COMPANY LIMITED
MONTREAL, QUE.

Electrical and Mechanical Specifications

TUNING RANGE

Standard Broadcast ---------- 540-1600 KC
Intermediate Frequency ---------- 455 KC

TUBE COMPLEMENT

(1) Type 12BE6 ---------- Converter
(2) Type 12SF7 ----------I.F. Amplifier Det. & A.V.C.
(3) Type 12SC7 ----------Audio Phase Inverter
(4) Type 35C5 ---------- Output
(5) Type 35C5 ---------- Output

A Selenium rectifier is used.

Dial Lamps (2) ----------Mazda 47
Tuning Drive Ratio ----------11:1 (5½ turns of knob)

POWER SUPPLY RATING

Rating A-----105-125 Volts, 60 cycles, .40 amps. 46 watts
Rating B-----105-125 Volts, 25 cycles, .40 amps. 46 watts

LOUDSPEAKER

Size and type ----------6x9 in. P.M.
Voice coil impedance ---------- 3.4 ohms at 400 cycles

POWER OUTPUT

Undistorted ----------2.5 watts
Maximum ----------3.5 watts

RECORD CHANGER (RP-168-C)

Turntable speed ----------45 r.p.m.
Record capacity ----------eight 7 in.
Pickup ----------Crystal (Medium output)

CABINET DIMENSIONS

Height ----------29¼ in.
Width ----------29⅛ in.
Depth ----------14½ in.

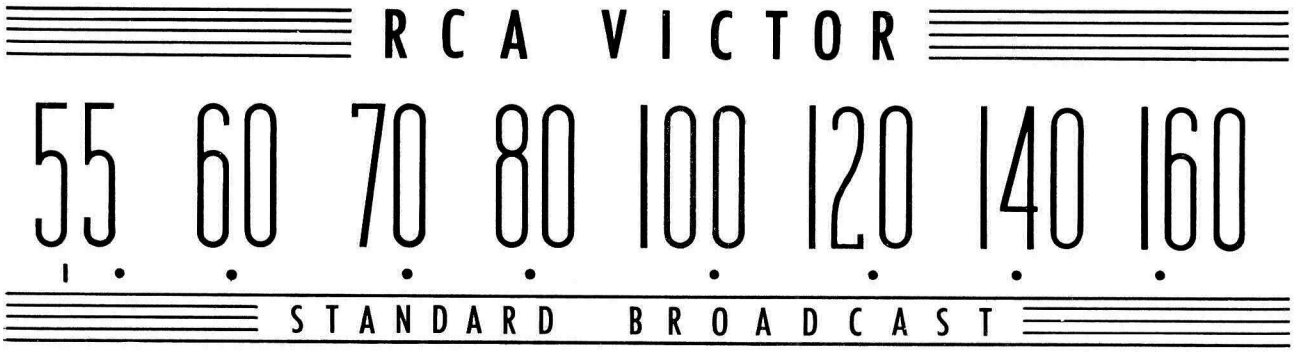

The Dial Scale drawing shown is a full size reproduction. It can be used as a reference in alignment procedure.

Fig. 1—Dial Scale

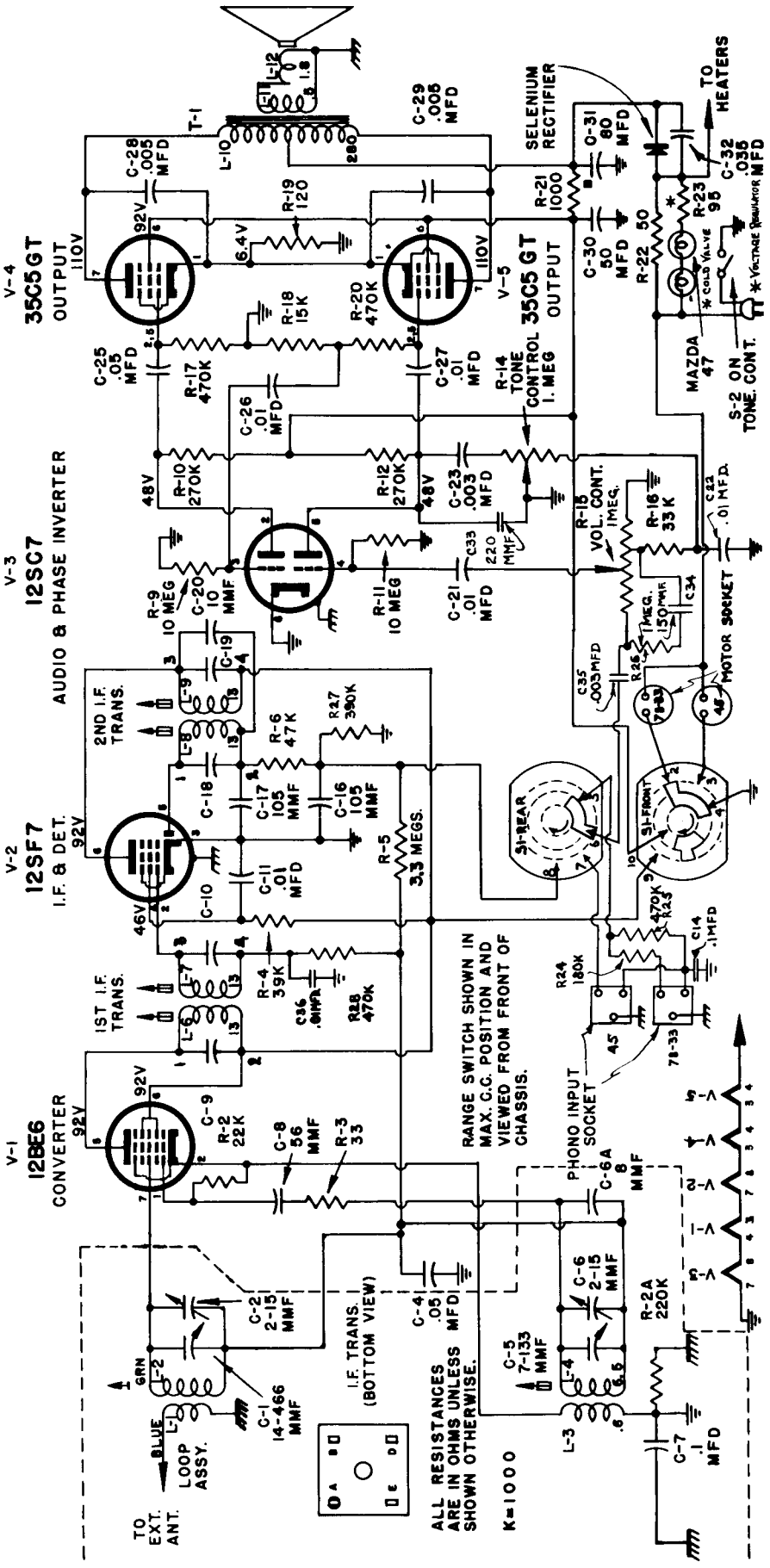

FIG. 2 — SCHEMATIC DIAGRAM

Pickup Landing Adjustment "A"

The pickup point should land half-way between the outer edge of the record and the first music groove.

If the pickup lands inside the starting grooves—turn screw "A" slightly clockwise. If pickup lands outside the starting grooves—turn screw "A" slightly counterclockwise.

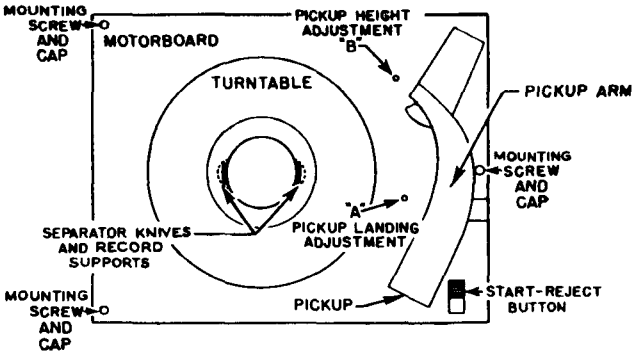

Fig. 3—Top View RP168C Record Changer

ALIGNMENT PROCEDURE

Before aligning the receiver, set the gang condenser for maximum capacity and then set the dial cursor on the calibration point at the extreme left hand end of the dial.

When only a portion of the circuit is to be aligned select the required portion and perform all the remaining steps.

In order to obtain best results, it is advisable to align the 455 KC I.F.'s with the help of a cathode ray oscilloscope. The scope should be connected across the volume control. If this equipment is not available, use the method outlined below in the alignment chart.

Pickup Height Adjustment "B"

During cycle the pickup arm must rise high enough to clear a stack of eight records on the turntable, but not high enough to cause the top of the arm to touch records resting on the record supports.

If pickup does not clear a stack of eight records—turn screw "B" slightly clockwise. If pickup arm touches records on record supports—turn screw "B" slighty counterclockwise.

Care of Sapphire

The record changer sapphire is protected by a permanent metal guard. LINT MAY COLLECT TO CLOG THE OPENING IN THE GUARD AT THE SAPPHIRE POINT AND CAUSE POOR RECORD REPRODUCTION. This may require occasional cleaning of the guard opening—clean by carefully brushing with a small soft brush.

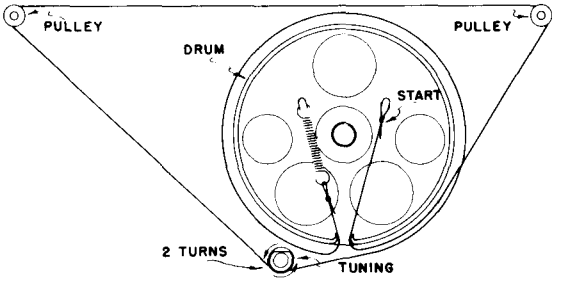

Fig. 5—Dial Cord Stringing

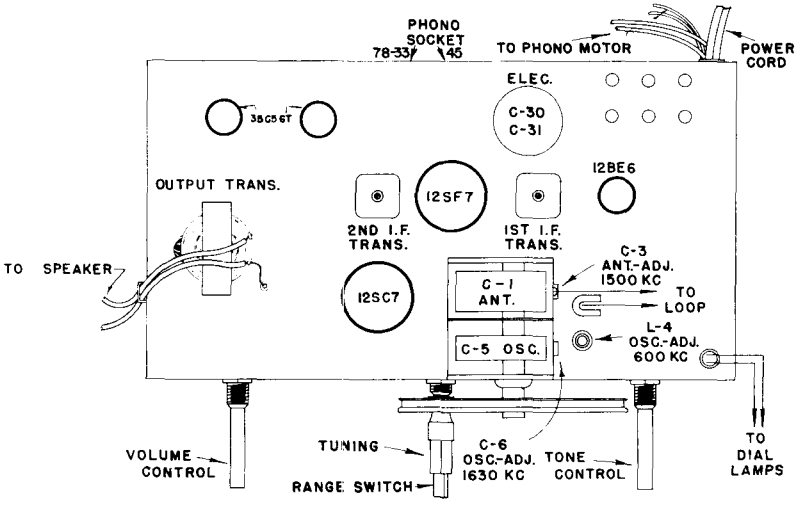

Fig. 4—Chassis Layout & Alignment Adj.

ALIGNMENT CHART

Order of Alignment		TEST OSCILLATOR				RECIEVER				
		Connect "HI" Side To	Connect "LO" Side To	Dummy Antenna	Frequency Setting	Range Selector	Receiver Dial Setting	Circuit To Adjust	Adjustment Symbols	Notes
I.F. Alignment	1	V-2, 12SF7 Pin #2	GND Common	0.1MFD	455KC	Radio	"HI" End	2nd I.F. Trans.	L-8, L-9	Max. Out.
	2	V-1, 12BE6 Pin #7	Same	Same	Same	Same	Same	1st I.F. Trans.	L-6, L-7	Same
	3	Repeat steps 1 and 2.								
S.B. Alignment	4	"Ant" Lead	Chassis GND	220 MMF	600 KC	Radio	600 KC	S.B.-Osc.	L-4 (Rock in to Loop)	Same
	5	Same	Same	Same	1500 KC	Same	1500 KC	S.B.-Osc.	C-6	Same
	6	Same	Same	Same	1500 KC	Same	1500 KC	S.B.-R.F.	C-2	Same
	7	Repeat Steps 4, 5 & 6.								

REPLACEMENT PARTS FOR MODEL V305

Insist on genuine factory tested parts, which are readily identified and may be purchased from authorized dealers.

STOCK NO.	DESCRIPTION
	CHASSIS ASSEMBLY
S-5384	Capacitor-8 MMF. +- 5% (C-6A)
S-5385	" -10 MMF.+-10% (C-20)
S-4523	Capristor-56 MMF,33 ohms (C-8,R-3)
S-4614	" -2-105 MMF,4700 ohms (C-17,R-6)
	Capacitor-150 MMF +- 10% (C-34)
S-4221	" -220 MMF +- 20% (C-33)
	" -.003 Mfd.+-10% 400 V. (C-23)
	" -.003 Mfd. + - 20% 200V. (C-35)
	" -.005 Mfd. + - 10% 600V. (C-28) (C-29)
	" -.01 Mfd. +- 10% 200 V. (C-22)
	" -.01 Mfd. +- 20% 200 V. (C-11, C-21,C-26,C-36)
	" -.01 Mfd. +- 20% 400 V. (C-27)
	" -.035 Mfd. +- 10% 400 V.(C-32)
	" -.05 Mfd. +- 20% 400 V.(C-4,C25)
	" -.1 Mfd. +- 10% 400 V.(C-7,C-14)
S-5703	" -Electrolytic (50 -80 MF) 150 V. (C-30,C-31)
S-5918*	Condenser-Gang condenser (C-1)
S-5919*	Control-Volume control (R-15) 1 meg.
S-5920*	Control-Tone control 1 Meg. (R14)
S-5701	Coil-Oscillator coil (L-4)
S-5459	Resistor-13.5 ohms at 104° 95 ohms at 38° +- 20% (%-23)
	" - 50 ohms +- 20% 3 watt (R22)
	" -120 ohms +- 10% 1 watt (R-19)
	" -1000 ohms +- 10% 1 watt (R-21)
	" -15,000 ohms +-10% 1/2 watt (R-18)
	" -22,000 ohms +-10% 1/2 watt (R-2)
	" -33,000 ohms +-10% 1/2 watt (R-16)
	" -39,000 ohms +-10% 1/2 watt (R-4)
	" -180,000 ohms +-10% 1/2 watt(R-24)
	" -220,000 ohms +-20% 1/2 watt(R-2A)
	" -270,000 ohms +-10% 1/2 watt(R-10, R-12)
	" -390,000 ohms +-10% 1/2 watt(R-27)
	" -470,000 ohms +-10% 1/2 watt(R-20, R-25)
	" -470,000 ohms +-20% 1/2 watt(R-17, R-28)
	* Indicates New Stock Items.

STOCK NO.	DESCRIPTION
	CHASSIS ASSEMBLY (Cont'd)
	Resistor-1 Megohm +-10% 1/2 watt (R-26)
	" -3.3 Megohm +-20% 1/2 watt(R-5)
	" -10 Megohm +-20% 1/2 watt (R-9, R11)
S-5702*	Switch-Radio phono switch (S-1)
S-5382	Selenium-Rectifier
S-4487	Transformer-1st I.F. trans. (L-6,L-7)
S-4662	Transformer-2nd I.F. trans. (L-8 & L-9)
S-5921*	Transformer-Output (T-1)
	SPEAKER ASSEMBLY
S-5922*	Speaker (6 X 9)
S-5923*	Cone-Cone & voice coil assy.
	MISCELLANEOUS ASSEMBLIES
S-5700	Cover-Cabinet cover
S-5924*	Decalcomania
S-4313	Cord-Dial cord (standard)
S-5281	Dial-Dial scale
S-4390	Knob-Walnut (Tuning)
S-5275	Knob-Mahogany "
S-5276	Knob-Blonde "
S-4387	Knob-Walnut (Range)
S-5277	Knob-Mahogany "
S-5278	Knob-Blonde "
S-3870	Knob-Walnut (Vol. & Tone)
S-5279	Knob-Mahogany "
S-5280	Knob-Blonde "
S-5699	Loop-Assembly
S-5272	Pointer-Dial pointer
S-5925*	Trimmer-Loop trimmer
S-5926*	Grille Cloth
S-5927*	Door Pulls
	Skid Assembly
	* Indicates New Stock Items.

All parts subject to change or withdrawal without notice.

Only items listed under stock numbers are available as Replacement Parts.



MODEL V-306

RCA VICTOR

"HIS MASTER'S VOICE"

RADIO & DUAL PHONOGRAPH COMBINATION

MODEL V-306

SERVICE DATA

— 1950 No. 17 —

GENERAL SERVICE DIVISION
RCA VICTOR COMPANY LIMITED
MONTREAL, QUE.

Electrical and Mechanical Specifications

TUNING RANGES

Standard Broadcast	540-1600 K.C.
Short Wave	5.8-18 MC.
Intermediate Frequency	455 K.C.

TUBE COMPLEMENT

(1) RCA 6BE6	Converter
(2) RCA 6BA6	I.F.
(3) RCA 6AV6	Audio
(4) RCA 6C4	Driver
(5) RCA 6K6GT	Output
(6) RCA 6X5GT	Rectifier
Dial Lamps	(2) Mazda 51
Tuning Drive Ratio	12 to 1 (6 turns of knob)

POWER OUTPUT

Undistorted	2.5 watts
Maximum	3.5 watts

LOUDSPEAKER

Type	10 inch P.M.
Voice coil impedance	3.4 ohms at 400 cycles

POWER SUPPLY RATINGS

Rating A—105-125 volts, 60 cycles, .50 Amps., 58 watts
Rating B—105-125 volts, 25 cycles, .50 Amps., 58 watts

CABINET DIMENSIONS

Height	31"
Width	26½"
Depth	16½"

PHONOGRAPH (RP168A-1)

Record capacity	Ten 7 in.
Turntable speed	45 R.P.M.
Pickup	.6 volts at 1000 cycles across 1 Megohm load

PHONOGRAPH (RP-200)

Record capacity	Ten twelve inch or twelve ten inch
Turntable speed	33-1/3 or 78 R.P.M.
Pickup	1.4 volts at 4000 cycles across 500,000 ohm load

Refer to the RP168 and RP200 Service Notes for information on the 45 and 33⅓-78 R.P.M. record changers respectively.

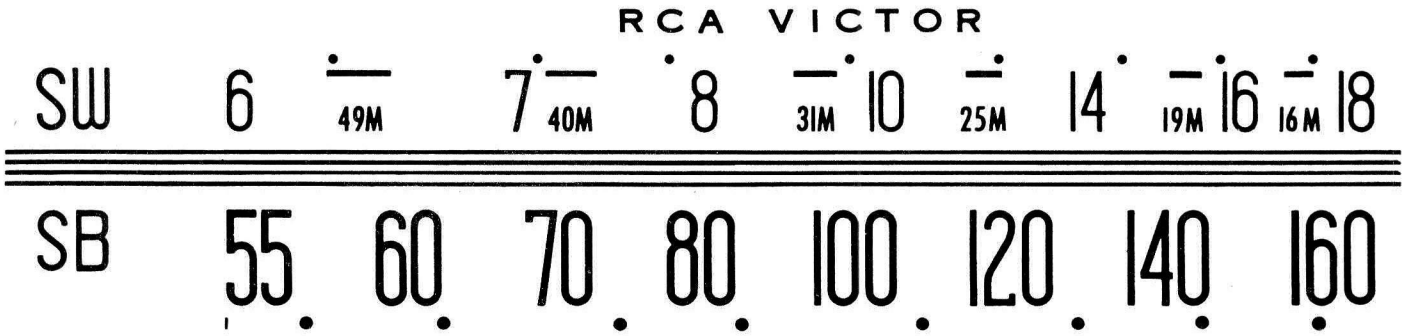

Fig. 1.—The Dial Scale Drawing shown is a full size reproduction. It can be used as a reference in alignment procedure.

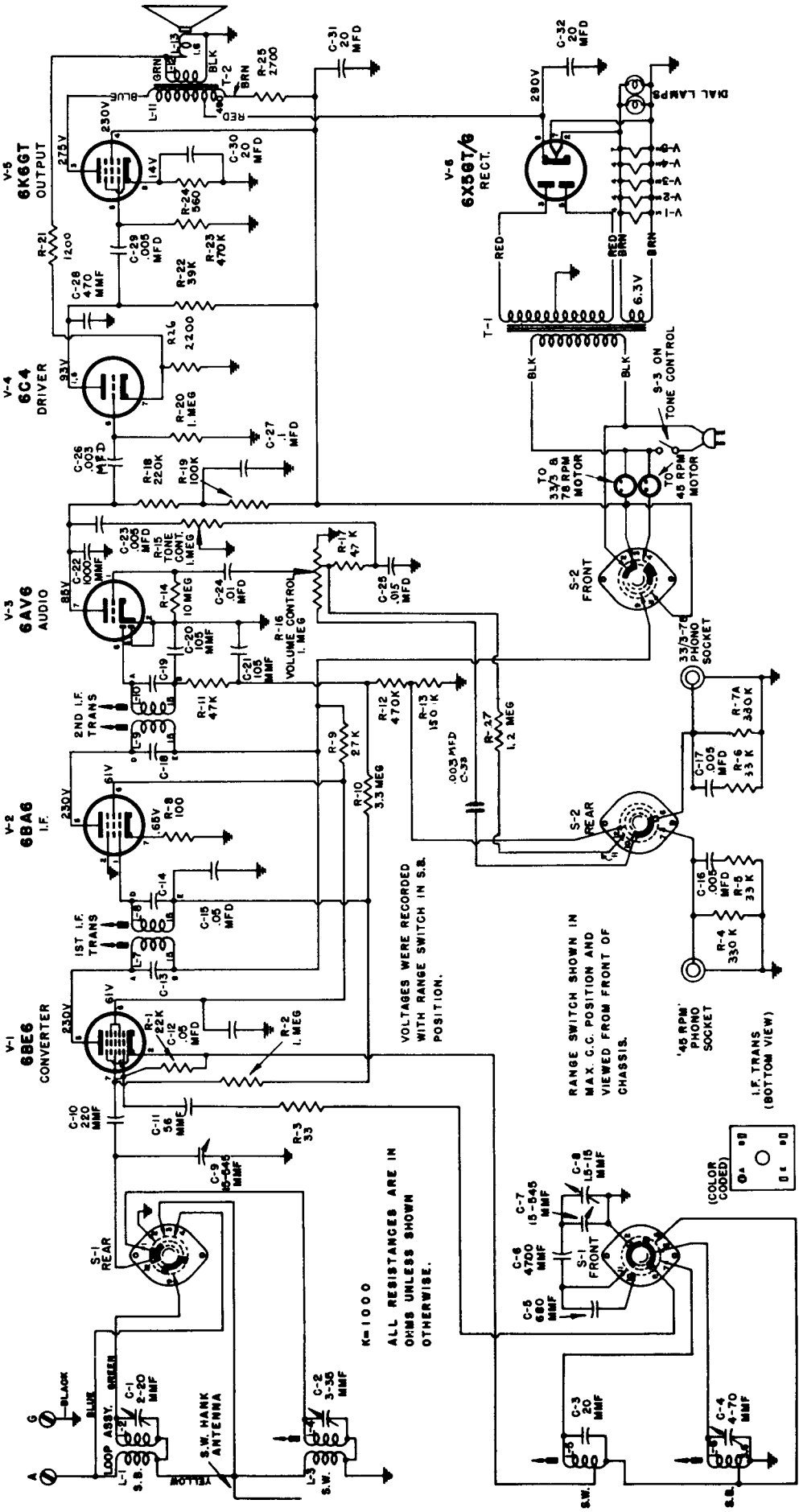

Fig. 2.—Schematic Diagram.

Alignment Procedure

Before aligning the receiver, set the gang condenser for maximum capacity and then set the dial cursor on the calibration point at the extreme left hand end of the dial.

When only a portion of the circuit is to be aligned select the required portion and perform all the remaining steps.

In order to obtain best results, it is advisable to align the 455 KC I.F.'s with the help of a cathode ray oscilloscope. The scope should be connected across the volume control. If this equipment is not available, use the method outlined below in the alignment chart.

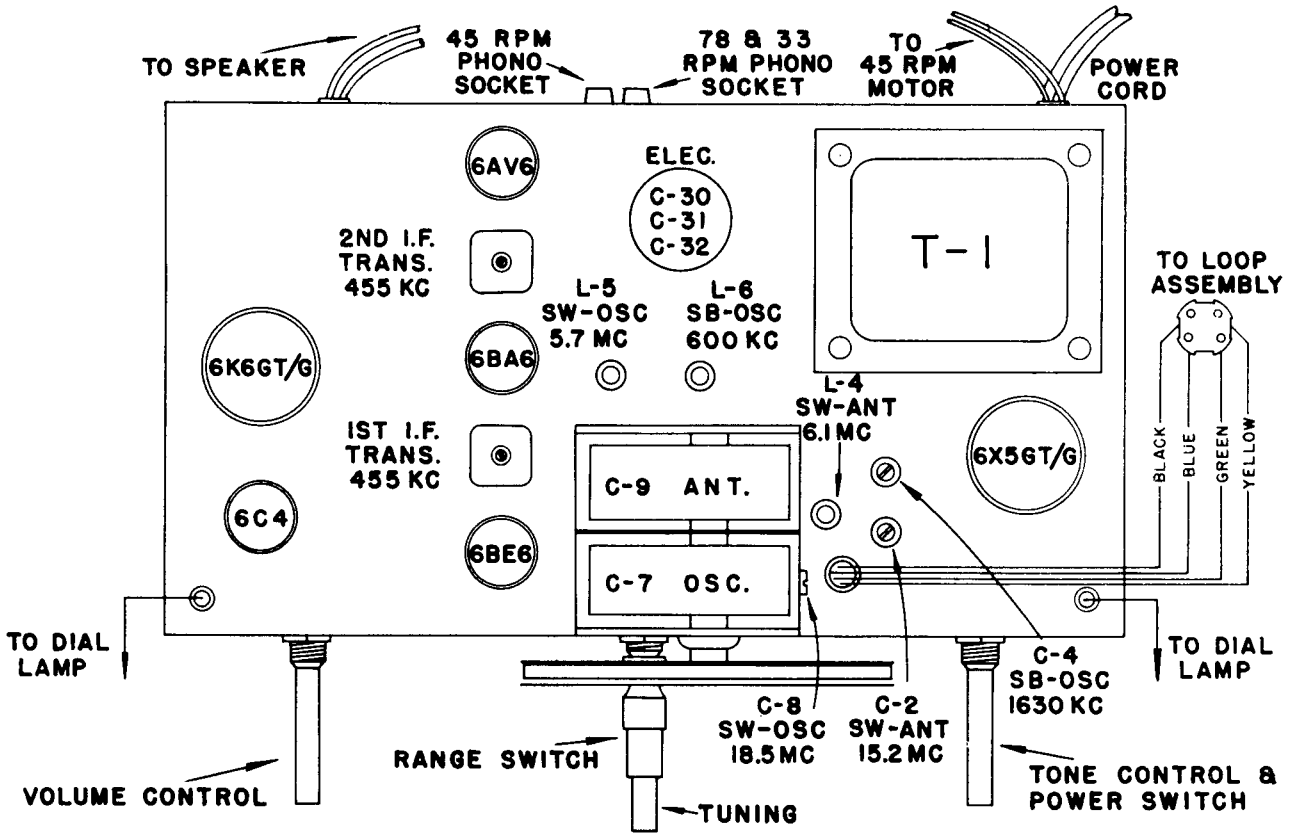

FIG. 3—CHASSIS LAYOUT AND ALIGNMENT ADJUSTMENT

ALIGNMENT CHART

ORDER OF ALIGNMENT		TEST OSCILLATOR				RECEIVER				
		CONNECT "HI" SIDE TO	CONNECT "LO" SIDE TO	DUMMY ANTENNA	FREQUENCY SETTING	RANGE SELECTOR	DIAL SETTING	CIRCUIT TO ADJUST	ADJUSTMENT SYMBOLS	NOTES
I.F. ALIGNMENT	1	Pin #1 6BA6	Gnd.	.1 mfd	455 KC	S.B.	"HI" END	2nd I.F. Trans.	Top & Bottom Slugs	Max. Out.
	2	Pin #7 6BE6	Same	Same	Same	Same	Same	1st I.F. Trans.	Top & Bottom Slugs	Same
	3	Repeat steps 1 & 2.								
S.W. ALIGNMENT	4	Ter. "A" on loop	Gnd.	300 ohms	5.7 Mc	S.W.	"LO" End	Osc.	L-5	Same
	5	Same	Same	Same	18.5 Mc	Same	"HI" End	Osc.	C-8	Same
	6	Same	Same	Same	6.1 Mc	Same	6.1 Mc	Ant.	L-4	Same
	7	Same	Same	Same	15.2 Mc	Same	15.2 Mc	Ant.	C-2	Same
	8	Repeat steps 4 to 7.								
S.B. ALIGNMENT	9	Same	Same	220 mmf	600 Kc	S.B.	600 Kc	Osc.	L-6 Rock In to Loop	Same
	10	Same	Same	Same	1630 Kc	Same	"HI" End	Osc.	C-4	Same
	11	Same	Same	Same	1500 Kc	Same	1500 Kc	Loop Trimmer	C-1*	Same
	12	Repeat steps 9 to 11								

* Align C-1 when receiver & loop assembly are in the cabinet.

REPLACEMENT PARTS FOR MODEL V-306

Insist on Genuine Factory Tested Parts, which are readily identified and may be purchased from Authorized Dealers.

STOCK NO.	Description
	Chassis Assembly
* S-5943	Capacitor, 20 MMF. ± 5% 500V. (C-3)
73867	Capristor, 56 MMF. 33 ohms. (C-11) (R-33)
S-4614	" 2-105 MMF. 47000 ohms. (C-20) (C-21) (R-11)
* S-5940	Capacitor, 220 MMF. ± 20% 350V. (C-10)
* S-5933	" , 470 MMF. ± 20% 350V. (C-28)
* S-5941	" , 680 MMF. ± 5% 300V. (C-5)
S-5370	" , 1000 MMF ± 20% 350V. (C-22)
* S-5942	" , 4700 MMF ± 5% 500V. (C-6)
---	" , .003 MFD. ± 20% 200V. (C-33)
---	" , .003 MFD ± 20% 400V. (C-26)
---	" , .005 MFD ± 10% 200V. (C-16) (C-17)
---	" , .005 MFD. ± 20% 400V. (C-23) (C-29)
---	" , .01 MFD ± 20% 400V. (C-24)
---	" , .015 MFD. ± 10% 200V. (C-25)
---	" , .05 MFD ± 20% 200V. (C-15)
---	" , .05 MFD ± 20% 400V. (C-12)
---	" , .1 MFD ± 20% 400V. (C-27)
S-5630	Condenser, Gang Condenser & Drum. (C-7) (C-9)
S-5362	Capacitor-Electrolytic (C-30) (C-31) (C-32)
S-5352	Coil-S.B. oscillator coil (L-6)
S-5351	Coil-S.W. antenna coil (L-3)
S-5353	Coil-S.W. oscillator coil (L-5)
S-5356	Control-Volume control 1. MEG. (R-16)
S-5357	Control-Tone control 1. MEG. (R-15)
* S-5930	Loop-loop assembly (L-1) (L-2)
---	Resistor, 100 ohms ± 20% ½ watt (R-8)
---	" , 560 ohms ± 10% 1 watt (R-24)
---	" , 1200 ohms ± 10% 1 watt (R-21)
---	" , 2200 ohms ± 10% 1 watt (R-26)
---	" , 2700 ohms ± 10% 1 watt (R-25)
---	" , 22000 ohms ± 20% ½ watt (R-1)
---	" , 27000 ohms ± 10% 1 watt (R-9)
---	" , 33000 ohms ± 10% ½ watt (R-5) (R-6)
---	" , 39000 ohms ± 10% 1 watt (R-22)
---	" , 47000 ohms 10% ½ watt (R-11)
---	" , 47000 ohms 20% " (R-17)
---	" , 100,000 ohms ± 20% ½ watt (R-19)
---	" , 150,000 ohms ± 10% " (R-13)
---	" , 220,000 ohms ± 20% " (R-18)
---	" , 330,000 ohms ± 10% " (R-4) (R-7A)
---	" , 470,000 ohms ± 10% " (R-23)
---	" , 1 Megohm ± 20% ½ watt (R-2) (R-20)
---	" , 1.2 Megohm ± 10% ½ watt (R-27)
---	" , 3.3 Megohm ± 20% " (R-10)
---	" , 10 Megohm ± 20% " (R-14)
S-5358	Switch-Range Switch (S-1) (S-2)
S-4487	Transformer-1st I.F. Trans. (L-7) (L-8)
S-5570	" 2nd " " (L-9) (L-10)
* S-5938	" -Power 60 cycle (T-1)
* S-5939	" -Power 25 cycle (T-1)
* S-5931	Transformer-Output Trans. (T-2)
	Speaker Assembly
* S-5928	Speaker 10"
* S-5929	Cone-Cone & voice coil assembly
	Miscellaneous Assemblies
* S-5937	Back-Cabinet back (Mahogany & Walnut)
* S-5936	Back-Cabinet back (Blonde)
S-4313	Cord-Dial cord (Standard)
* S-5935	Decalcommania
S-5263	Dial scale
* S-5934	Grille Cloth
S-5275	Knob (Mahogany) tuning
S-4390	" (Walnut) tuning
S-5276	" (Blonde) tuning
S-5277	" (Mahogany) range
S-4387	" (Walnut) range
S-5278	" (Blonde) range
S-5279	" (Mahogany) Volume & Tone.
S-3870	" (Walnut) Volume & Tone.
S-5280	" (Blonde) Volume & Tone.
S-5272	Pointer-dial pointer
* S-5344	Phono-Socket
---	Pulls-door pulls.
S-5363	Trimmer Assembly (C-1) (C-2) (C-4) (C-8)

* INDICATES NEW STOCK ITEM.

Only items listed under stock numbers are available as Replacement Parts.

All parts and prices subject to change or withdrawal without notice.

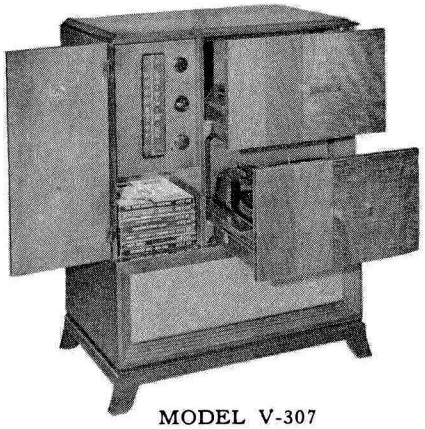

MODEL V-307

RCA VICTOR

"HIS MASTER'S VOICE"

RADIO & DUAL PHONOGRAPH COMBINATION

MODEL V-307

SERVICE DATA

—1950 No. 10—

GENERAL SERVICE DIVISION
RCA VICTOR COMPANY LIMITED
MONTREAL, QUE.

Electrical and Mechanical Specifications

Tuning Ranges:

Standard Broadcast ---------- 540-1600 KC.
Short Wave ---------- 5.8-18.2 MC.
Intermediate Frequency ---------- 455 KC.

Tube Complement

(1) RCA 6BE6 ---------- Converter
(2) RCA 6BA6 ---------- I.F.
(3) RCA 6AV6 ---------- Phase Inverter & A.V.C.
(4) RCA 6AV6 ---------- Audio
(5) RCA 6V6GT ---------- Output
(6) RCA 6V6GT ---------- Output
(7) RCA 6X5GT/G ---------- Rectifier

Dial Lamps ---------- (3) Mazda 51

Tuning Drive Ratio ---------- 10 to 1 (5½ turns of knob)

Power Output

Undistorted ---------- 5.5 watts
Maximum ---------- 8.5 watts

Loudspeaker

Type ---------- 12" P.M.
Voice coil impedance ---------- 2.2 ohms at 400 cys.

Power Supply Ratings

Rating A—105—125 volts, 60 cycles, .55 amps, 64 watts
Rating B—105—125 volts, 25 cycles, .55 amps, 64 watts

Cabinet Dimensions

Height ---------- 32¾"
Width ---------- 25½"
Depth ---------- 15½"

PHONOGRAPH (RP-200)
Record capacity ---------- Ten twelve inch or twelve ten inch
Turntable speed ---------- 33-1/3 or 78 R.P.M.
Pickup ---------- 1.4 volts at 4000 cycles across 500,000 ohm load

PHONOGRAPH (RP168A-1)
Record capacity ---------- Ten 7 in.
Turntable speed ---------- 45 R.P.M.
Pickup ---------- .6 volts at 1000 cycles across 1 Megohm load

Refer to the RP168 and RP200 Service Notes for information on the 45 and 33⅓-78 R.P.M. record changers respectively.

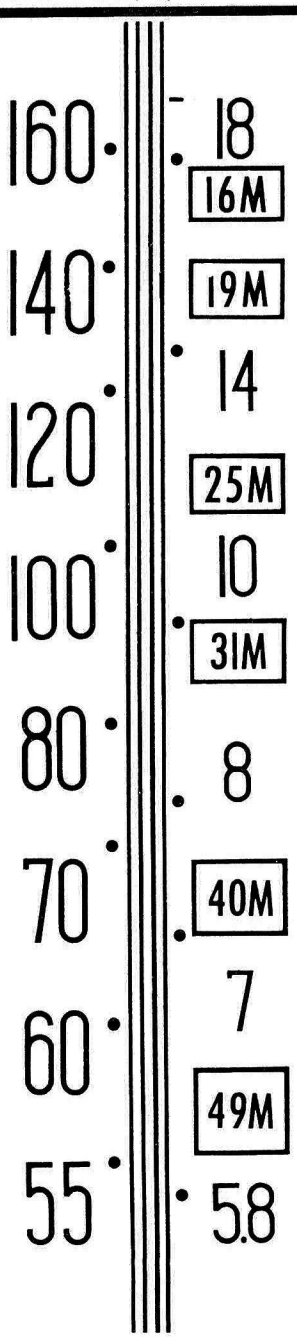

Fig. 1.—The Dial Scale Drawing shown is a full size reproduction. It can be used as a reference in alignment procedure.

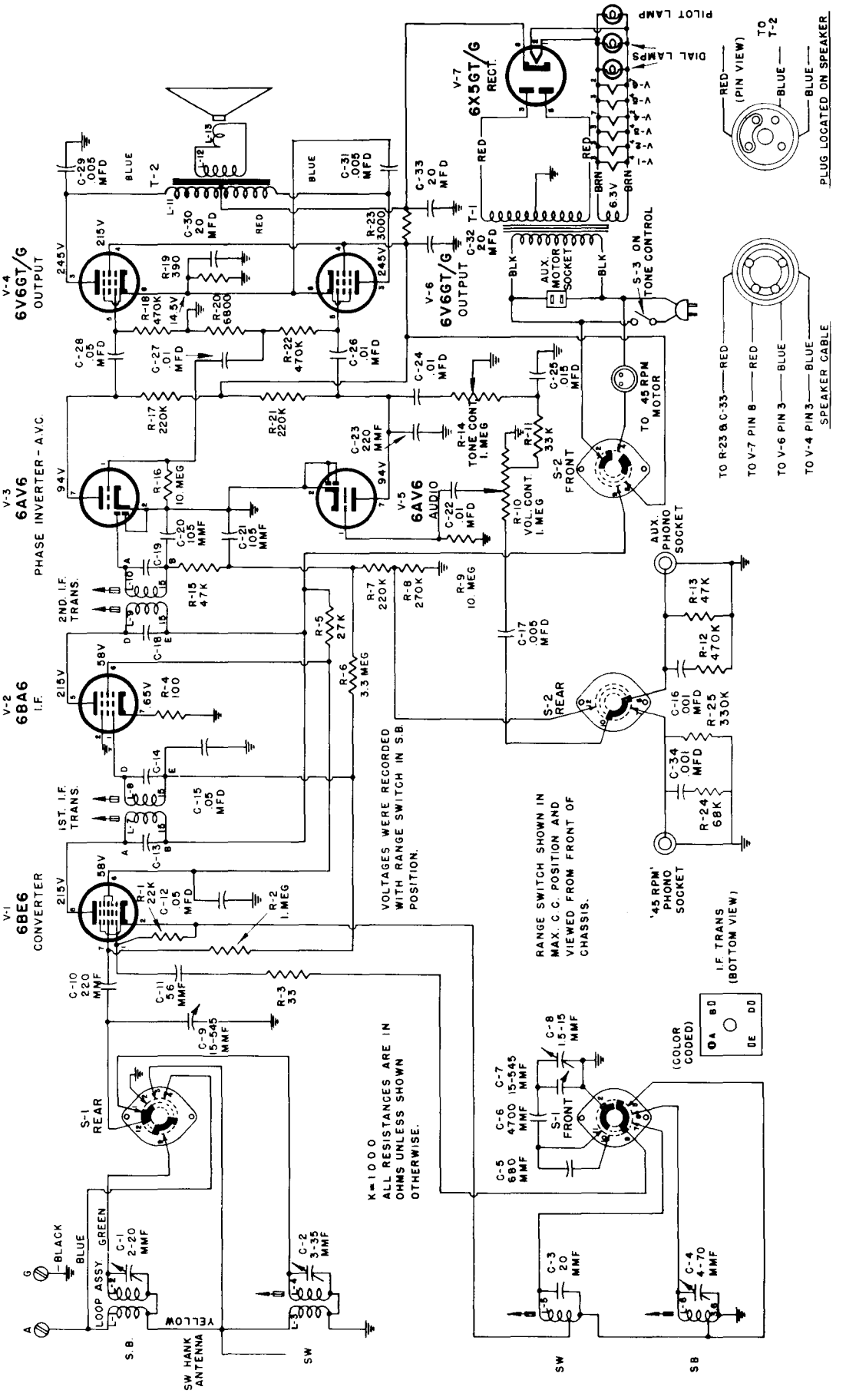

Fig. 2.—Schematic Diagram.

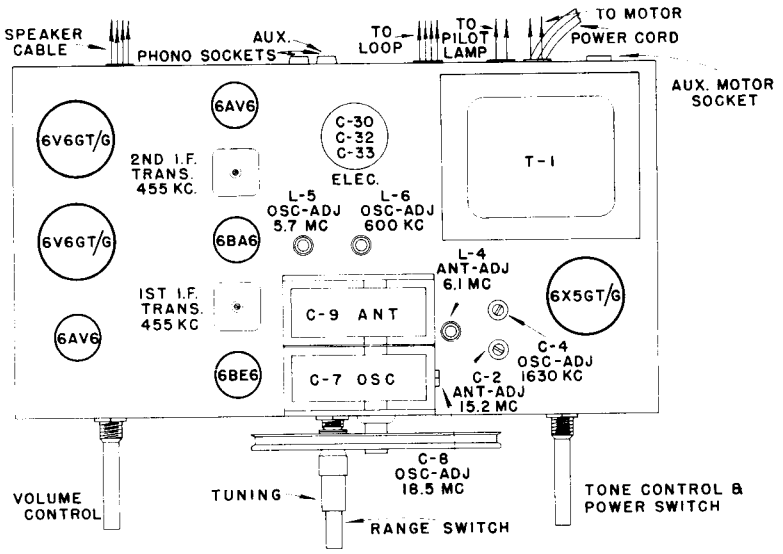

FIG. 3—CHASSIS LAYOUT AND ALIGNMENT ADJUSTMENT

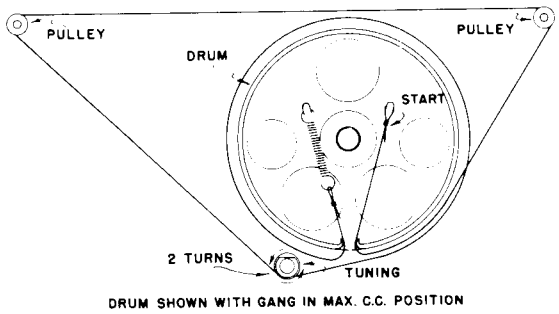

FIG. 4—DIAL CORD STRINGING

Critical Lead Dress

Dress the blue and the green leads, from the terminal board to the tone control, away from each other.

Alignment Procedure

Before aligning the receiver, set the gang condenser for maximum capacity and then set the dial cursor on the calibration point at the extreme left hand end of the dial.

When only a portion of the circuit is to be aligned select the required portion and perform all the remaining steps.

In order to obtain best results, it is advisable to align the 455 KC I.F.'s with the help of a cathode ray oscilloscope. The scope should be connected across the volume control. If this equipment is not available, use the method outlined below in the alignment chart.

ALIGNMENT CHART

Order of Alignment		TEST OSCILLATOR				RECEIVER				
		Connect "HI" Side To	Connect "LO" Side To	Dummy Antenna	Frequency Setting	Range Selector	Receiver Dial Setting	Circuit To Adjust	Adjustment Symbols	Notes
I.F. Alignment	1	V-2, 6BA6 Pin #1	GND	.1MFD.	455 KC	S.B.	"HI" End	2nd I.F. Trans.	L-9, L-10	Max. Out.
	2	V-1, 6BE6 Pin #7	Same	Same	Same	Same	Same	1st I.F. Trans.	L-7, L-8	Same
	3	Repeat Steps 1 and 2								
S.W. Alignment	4	"Ant" Terminal	GND	300 OHMS	5.7 MC	S.W.	"LO" End	S.W. Osc.	L-5	Same
	5	Same	Same	Same	6.1 MC	Same	6.1 MC	S.W.-Ant.	L-4	Same
	6	Same	Same	Same	18.5 MC	Same	"HI" End	S.W.-Osc.	C-8	Same
	7	Same	Same	Same	15.2 MC	Same	15.2 MC	S.W.-RF	C-2	Same
	8	Repeat steps 4 to 7								
S.B. Alignment	9	"Ant" Terminal	GND	220 MMF	600 KC	S.B.	600 KC	S.B.-Osc.	L-6 (Rock In)	Same
	10	Same	Same	Same	1630 KC	Same	"HI" End	S.B.-Osc.	C-4	Same
	11	Same	Same	Same	1500 KC	Same	1500 KC	S.B.-Ant.	C-1*	Same
	12	Repeat steps 9 to 11								

* It is advisable to Align C-1 when the loop antenna & receiver are both in the cabinet.

REPLACEMENT PARTS FOR MODEL V-307

Insist on Genuine Factory Tested Parts, which are readily identified and may be purchased from Authorized Dealers.

STOCK NO.	Description
	Chassis Assembly
S-4514	Capacitor-Trimmers,2 section, 3-35 MMF. & 4 - 70 MMF. (C2,C4)
31871	" -Ceramic,20 MMF.+ - 5% (C3)
S-4523	Capristor-56 MMF.and 33 ohms (C11,R3)
S-4614	" -2 - 105 MMF.&1 - 47,000 ohms (C20,C21,R15)
S-4221	Capacitor-Ceramic,220 MMF. + - 20% (C10,C23)
14498	" -Mica, 680 MMF. + - 5%(C5)
39668	" - " 4700 MMF. + - 5%(C6)
---	" -Paper .005 Mfd. + - 20%, 200V. (C17)
---	" -Paper .001 Mfd. + - 10%, 200V. (C16,C34)
---	" -Paper .005 Mfd. + - 10%,1000V. (C29,C31)
---	" -Paper .01 Mfd. + - 20%, 200V. (C22,C27)
---	" -Paper .01 Mfd. + - 10%, 400V. (C24)
---	" -Paper .01 Mfd. + - 20%, 400V. (C26)
---	" -Paper .015 Mfd.+ - 10%, 200V. (C25)
---	" -Paper .05 Mfd. + - 20%, 200V. (C15)
---	" -Paper .05 Mfd. + - 20%, 400V. (C12,C28)
S-5273	" -Electrolytic,3 sections, 20 Mfd., 400 V. (C33) 20 Mfd., 350 V. (C32) 20 Mfd., 25 V. (C30)
S-5360	Condenser & drum (C9,C7,C8)
S-5356	Control-Volume control (R10)
S-5269	" -Tone control & power switch (R14,S3)
S-5351	Coil-S.W. ant. coil (L3,L4)
S-5352	" -S.B. osc. coil (L6)
S-5353	" -S.W. osc. coil (L5)
---	Resistor-100 ohms, + - 20%, 1/2 watt (R4)
---	" -390 ohms, + - 10%, 1/2 watt (R19)
---	" -3000 ohms,+ - 5% 2 watt(R23)
---	" -6800 ohms,+ - 10% 1/2 watt(R20)
---	" -22000 ohms,+ - 20% 1/2 watt(R1)
---	" -27000 ohms,+ - 10% 2 watts (R5)
---	" -47000 ohms,+ - 10% 1/2 watt (R13)

STOCK NO.	Description
	Chassis Assembly - (Cont'd.)
---	Resistor-33,000 ohms + - 10% 1/2 watt (R11)
---	" -68,000 ohms + - 10% 1/2 watt (R24)
---	" -220,000 ohms + - 10% 1/2 watt (R7)
---	" -220,000 ohms + - 20% 1/2 watt (R17,R21)
---	" -270,000 ohms + -10% 1/2 watt (R8)
---	" -470,000 ohms + - 10% 1/2 watt (R22,R12)
---	" -470,000 ohms + - 20% 1/2 watt (R18)
---	" -1.0 Megohm + - 20% 1/2 watt(R2)
---	" -3.3 Megohm + - 20% 1/2 watt(R6)
---	" -10.0 Megohm + - 20% 1/2 watt (R16,R22)
S-5358	Switch-Range Switch (S1,S2)
S-4487	Transformer-1st I.F.(L7,L8,C13,C14)
S-5570	" -2nd I.F.(L9,L10,C18,C19)
S-4379	" -Power (60 cycles) T-1
S-4381	" -Power (25 ") T-1
	Speaker Assembly
S-5672	Cone & voice coil assembly
S-5813	Speaker
S-5775	Transformer-Output transformer (T2)
	Record Changer Mechanism
	Refer to RP-168 and RP-200 series record changer Service Notes.
	Miscellaneous Assemblies
S-4313	Cord-Dial cord (Standard)
S-5776	Decalcomania
S-5263	Dial scale
S-5777	Grille Cloth
S-4390	Knob-Walnut
S-5275	" -Mahogany
S-5276	" -Blonde
S-4387	" -Walnut
S-5277	" -Mahogany
S-5278	" -Blonde
S-3870	" -Walnut
S-5279	" -Mahogany
S-5280	" -Blonde
S-5354	Loop-Loop assembly (L1,L2)
S-5272	Pointer-Station selector pointer

Only items listed under stock numbers are available as Replacement Parts.

All parts subject to change or withdrawal without notice.

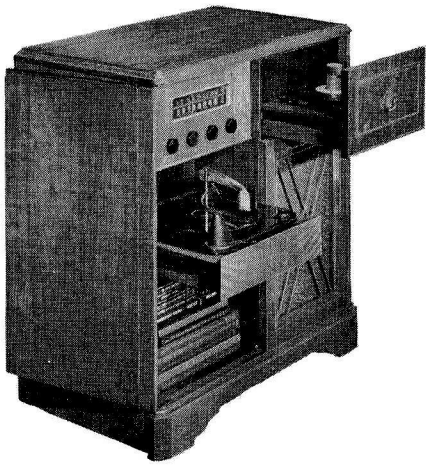

V-309

RCA VICTOR

"HIS MASTER'S VOICE"

RADIO-PHONOGRAPH COMBINATION

MODEL V-309
SERVICE DATA

—1950 NO. 18—

GENERAL SERVICE DIVISION
RCA VICTOR COMPANY LIMITED
MONTREAL, QUE.

Electrical and Mechanical Specifications

TUNING RANGE

Standard Broadcast	540-1600 KC
Short Wave	5.8-18.2 MC
Intermediate Frequency	455 KC

TUBE COMPLEMENT

(1)	Type 6BA6	R.F. Amplifier
(2)	Type 6BE6	Converter
(3)	Type 6BA6	I.F. Amplifier
(4)	Type 6AV6	Audio
(5)	Type 6AV6	Det. A.V.C. Phase Inverter
(6)	Type 6C4	Driver
(7)	Type 6V6GT	Output
(8)	Type 6V6GT	Output
(9)	Type 5Y3GT	Rectifier

Dial Lamps (2)	Mazda 51
Pilot Lamp	Mazda 51

POWER SUPPLY RATING

Rating A—105-125 Volts, 60 cycles, .75 amps.	86 watts
Rating B—105-125 Volts, 25 cycles, .75 amps.	86 watts
Tuning Drive Ratio	19:1 (9½ turns of knob)

LOUDSPEAKER

Size and type	12 in. P.M.
Voice coil impedance	2.2 ohms at 400 cycles

POWER OUTPUT

Undistorted	7 watts
Maximum	10 watts

RECORD CHANGER (RP-168-1)

Turntable speed	45 r.p.m.
Record capacity	Eight. 7 in.—long playing
Pickup	Crystal (Medium output)

RECORD CHANGER (RP201)

Turntable Speed	33-1/3 & 78 R.P.M.
Record Capacity	10-12" or 12-10"
Pickup—Dual Stylus—Rotatable Crystal (Medium Output)	

CABINET DIMENSIONS

Height	34 in.
Width	32½ in.
Depth	18¼ in.

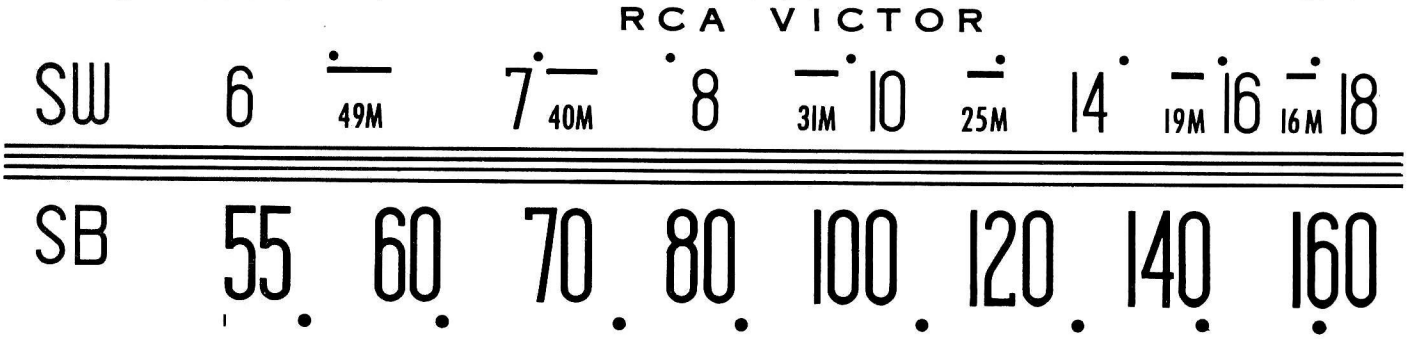

The Dial Scale drawing shown is a full size reproduction. It can be used as a reference in alignment procedure.

Fig. 1—Dial Scale

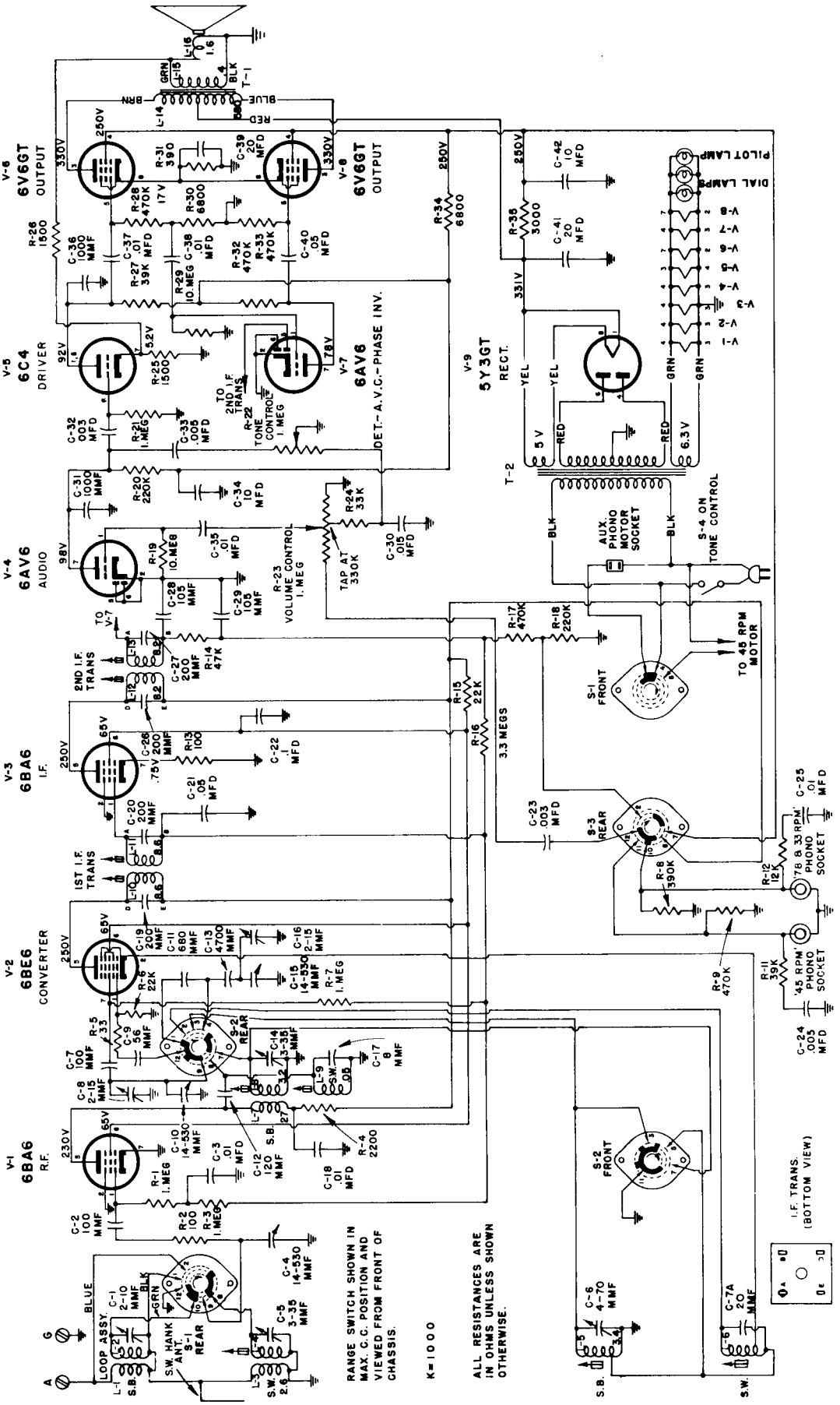

Fig. 2—Schematic Diagram

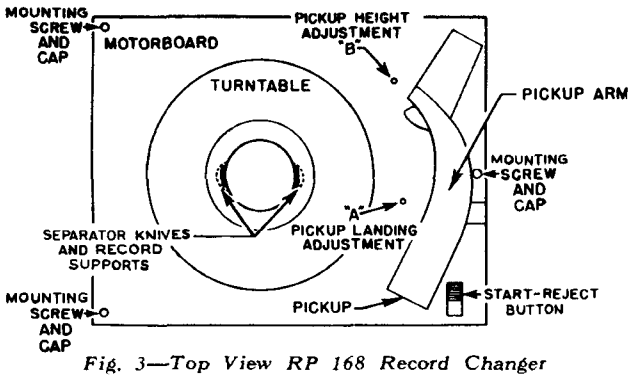

Fig. 3—Top View RP 168 Record Changer

Pickup Landing Adjustment "A"

The pickup point should land half-way between the outer edge of the record and the first music groove.

If the pickup lands inside the starting grooves—turn screw "A" slightly clockwise. If pickup lands outside the starting grooves—turn screw "A" slightly counterclockwise.

Pickup Height Adjustment "B"

During cycle the pickup arm must rise high enough to clear a stack of eight records on the turntable, but not high enough to cause the top of the arm to touch records resting on the record supports.

If pickup does not clear a stack of eight records—turn screw "B" slightly clockwise. If pickup arm touches records on record supports—turn screw "B" slightly counter-clockwise.

Record Separators

In the out of cycle position the record separator knives or discs are normally concealed inside the center post. During service, the position of the star wheel on the underside of the record changer may be accidentally shifted; this may cause the separator knives to be extended when they should be concealed.

If the separator knives are thus extended—turn the power on so that the turntable is revolving, gently press fingers against the extended knives until they disappear inside the center post — DO THIS ONLY WHILE MECHANISM IS OUT OF CYCLE.

Care of Sapphire

The record changer sapphire is protected by a permanent metal guard. LINT MAY COLLECT TO CLOG THE OPENING IN THE GUARD AT THE SAPPHIRE POINT AND CAUSE POOR RECORD REPRODUCTION. This may require occasional cleaning of the guard opening—clean by carefully brushing with a small soft brush.

CRITICAL LEAD DRESS

1—Dress green loop lead away from chassis.
2—Dress black and blue loop leads away from green lead.
3—Keep C-13 leads as short as possible, and dress away from chassis.
4—Dress blue lead, from R.F. section of the gang (C-10) to S-2 pin #9, to chassis.

ALIGNMENT PROCEDURE

Before aligning the receiver, set the gang condenser for maximum capacity and then set the dial cursor on the calibration point at the extreme left hand end of the dial.

When only a portion of the circuit is to be aligned select the required portion and perform all the remaining steps.

In order to obtain best results, it is advisable to align the 455 KC I.F.'s with the help of a cathode ray oscilloscope. The scope should be connected across the volume control. If this equipment is not available, use the method outlined below in the alignment chart.

ALIGNMENT CHART

Order of Alignment		TEST OSCILLATOR				RECEIVER				
		Connect "HI" Side To	Connect "LO" Side To	Dummy Antenna	Frequency Setting	Range Selector	Receiver Dial Setting	Circuit To Adjust	Adjustment Symbols	Notes
I.F. Alignment	1	V-3, 6BA6 Pin #1	GND	.1MFD	455KC	S.B.	"LO" End	2nd I.F. Trans.	L-12, L-13	Max. Out.
	2	V-2, 6BE6 Pin #7	Same	Same	Same	Same	Same	1st I.F. Trans.	L-10, L-11	Same
	3	Repeat steps 1 and 2.								
S.W. Alignment	4	"Ant" Terminal	GND	300 OHMS	6.1 MC	S.W.	Same	S.W. Osc.	L-6	Same
	5	Same	Same	Same	Same	Same	6.1 MC	S.W.-R.F.	L-9	Same
	6	Same	Same	Same	Same	Same	Same	S.W.-Ant.	L-4	Same
	7	Same	Same	Same	17.75 MC	Same	17.75 MC	S.W. Osc.	C-16	Same
	8	Same	Same	Same	Same	Same	Same	S.W.-RF	C-9	Same
	9	Same	Same	Same	Same	Same	Same	S.W.-Ant.	C-3 (Rock in)	Same
	10	Repeat steps 4 to 9.								
S.B. Alignment	11	"Ant" Terminal	GND	220 MMF	600 KC	S.B.	"LO" End	S.B.-Osc.	L-5	Same
	12	Same	Same	Same	Same	Same	600 KC	S.B.-R.F.	L-8	Same
	13	Same	Same	Same	1599 KC	Same	1500 KC	S.B.-Osc.	C-6	Same
	14	Same	Same	Same	Same	Same	Same	S.B.-R.F.	C-14	Same
	15	Same	Same	Same	Same	Same	Same	S.B.-Ant.	C-1 *	Same
	16	Repeat Steps 11 to 15								

* It is advisable to Align C-1 when the loop antenna & receiver are both in the cabinet.

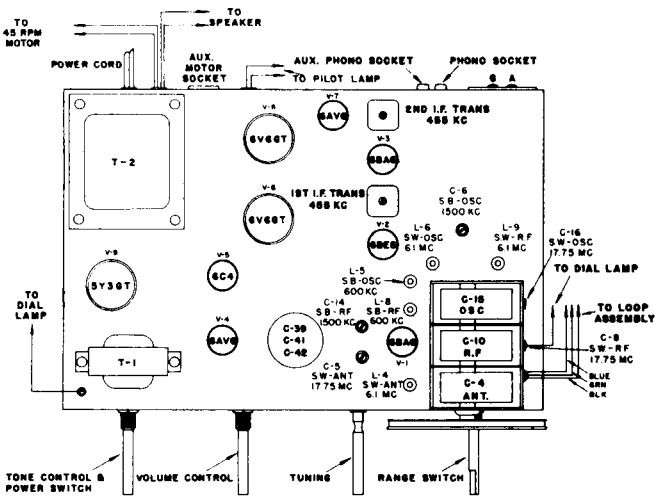

Fig. 4—Chassis Layout and Alignment Adjustments.

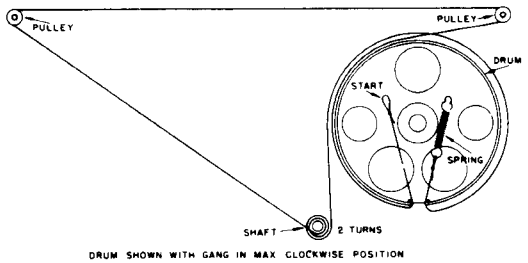

Fig. 5—Dial Cord Stringing.

REPLACEMENT PARTS FOR MODEL V-309

Insist on genuine factory tested parts, which are readily identified and may be purchased from authorized dealers.

STOCK NO.	DESCRIPTION
	CHASSIS ASSEMBLY
S-5093	Capacitor-Trimmer(C5,C14)
S-5094	" - " (C6)
70597	" -Ceramic 8 MMF.+ -10% 500V.(C17)
	" - " 20 MMF.+ - 5% 500V.(C7A)
73867	Capristor-56 MMF. ±10%,500V. and 33 ohms ½ watt (C9,R5)
	Capacitor-Ceramic 100 MMF.±20% 500V.(C2,C7)
S-4614	Capristor-2(105)MMF.,500V. & 4700ohms ½ W. (C28,C29,R14)
	Capacitor-Ceramic 120 MMF.±10%,500V.(C12)
	Capacitor-Mica 680 MMF.+ - 5% 300V.(C11)
S-5370	" -Ceramic 1,000 MMF.+ -20% 350V. (C31,C-36)
	" -Mica 4700 MMF.+ -5% 500V.(C13)
	" -Paper .003 Mfd. + -20% 200 V.(C23)
	" -Paper .003 Mfd.+ -20% 400V.(C32)
	" -Paper .005 Mfd.+ -10% 200V.(C24)
	" -Paper .005 Mfd.+ -20% 400V.(C33)
	" -Paper .01 Mfd.+ -20% 200V.(C3, C35,C38)
	" -Paper .01 Mfd.+ -10%,200 V.(C25)
	" -Paper .01 Mfd.+ -20%,400 V.(C18, C37)
	" -Paper .015 Mfd.+ -20% 400V.(C30)
	" -.05 Mfd.+ -20% 200V. (C21)
	" -.05 Mfd.+ -20% 400V. (C40)
	" -.1 Mfd. + -20% 400V. (C22)
S-5092	" -Electrolytic
	10 Mfd., 400 V. (C34)
	10 Mfd., 400 V. (C42)
	20 Mfd., 400 V. (C41)
	20 Mfd., 25 V. (C39)
S-5081	Coil-SB,R.F. Coil (L7-L8)
S-5083	" -SB,Osc. Coil (L5)
S-5084	" -SW.,Ant.Coil (L3-L4)
S-5080	" -SW.,R.F.Coil (L9)
S-5082	" -SW.,Osc.Coil (L6)
S-5091	Condenser-Variable condenser(C4,C10,C15)
	Resistor,100 ohms + - 20% ½ watt (R2,R13)
	" ,390 " + - 10% ½ " (R31)
	" 1500 " + - 10% ½ " (R25,R26)
	" 2200 " + - 20% ½ " (R4)
	" 3000 " + - 10%,5 " (R35)
	" 6800 " + - 10% ½ " (R30)
	" 6800 " + - 20% ½ " (R34)
	" 12000 " + - 10% ½ " (R12)
	" 22000 " + - 10% ½ " (R6)
	" 22000 " + - 20% ½ " (R15)
	" 33000 " + - 10% ½ " (R24)
	" 39000 " + - 10% ½ " (R11)
	" 39000 " + - 10% ½ " (R27)
	" 220000 " + - 10% ½ " (R18)
	" 220000 " + - 20% ½ " (R20)

STOCK NO.	DESCRIPTION
	CHASSIS ASSEMBLY (CONT'D.)
	Resistor-390000 ohms + -10% ½ watt (R8)
	" -470000 " + -10% ½ " (R28)(R33)
	" -470000 " + -20% ½ " (R9) (R17,R32)
	" -1.0 Meg.ohm + -20% ½ " (R1,R3,R7,R21)
	" -3.3 Meg.ohm + -20% ½ " (R16)
	" -10.0 Meg.ohm+ -20% ½ " (R19,R29)
S-5087	Switch-Range switch (S1,S2,S3)
S-5089	Tone Control (S4-R22) 1 Meg.
S-5085	Transformer-1st IF (L10-L11)
S-5086	" -2nd IF (L12-L13)
S-5090	" -Output Tr.(T1-L14-L15)
S-4381	" -Power Tr.25 Cy. (T2)
S-4379	" - " " 60 " (T2)
S-5088	Volume Control (R23) 1 Meg.
	SPEAKER ASSEMBLY
S-4288	Speaker-12 Inches
S-4298	Board-Speaker Terminal Board
S-4299	Cone-Cone & voice coil assy. (L16)
	MISCELLANEOUS ASSEMBLIES
S-4313	Cord-Dial Cord (Standard)
S-5281	Dial-Dial Scale
	Cabinet Back Cover
S-3870	Knob-Knob Assy. Walnut
S-5279	" - " " Mahogany
S-5075	" - " " Walnut
S-5532	" - " " Mahogany
S-5076	Loop-Ant. Loop Assy.
	Cloth-Grille Cloth
S-5347	Decalcommania
	English Door Pull
S-5335	Pointer-Station Selector
*S-5988	Hinge-"R.H."
*S-5989	Hinge-"L.H."
31418	Spring for dial cord
S-5344	Phono Socket
	For Record Changer Parts see Service Note RP-201
	* Indicates New Stock Item.

Only Items listed under stock numbers are available as Replacement Parts.
All Parts subject to change or withdrawal without notice.

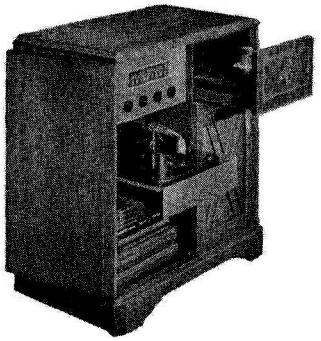

PHOTO OF MODEL V-309, V-310 SIMILAR

RCA VICTOR

"HIS MASTER'S VOICE"

A.M.-F.M. RADIO & DUAL PHONOGRAPH COMBINATION

MODEL V-310

SERVICE DATA

— 1950 No. 20 —

GENERAL SERVICE DIVISION
RCA VICTOR COMPANY LIMITED
MONTREAL, QUE.

Electrical and Mechanical Specifications

Tuning Range

Standard Broadcast (AM) ----------540-1,600 kc.
Frequency Modulation (FM) ----------88-108 mc.
Intermediate Frequencies ----AM—455 kc., FM—10.7 mc.

Tube Complement

(1) RCA 6CB6 ----------R-F Amplifier
(2) RCA 6J6 ----------Mixer and Oscillator
(3) RCA 6BA6 ----------I-F Amplifier
(4) RCA 6AU6 ----------Driver
(5) RCA 6AL5 ----------Ratio Detector
(6) RCA 6AV6 --------AM Det.—AVC—A-F Amplifier
(7) RCA 6C4 ----------Ph. Inv.
(8) RCA 6V6GT ----------Output
(9) RCA 6V6GT ----------Output
(10) RCA 5Y3GT ----------Rectifier

Dial Lamps (2) --------Type No. 51, 6-8 volts, 0.2 amp.
Jewel Lamp ----------Type No. 51, 6-8 volts, 0.2 amp.

Tuning Drive Ratio ----------10:1 (5 turns of knob)

Power Supply Rating ------115 volts, 60 cycles, 115 watts

Loudspeaker

Size and type ----------12 in. PM
Voice coil impedance ----------3.2 ohms at 400 cycles

Power Output

(Radio) Undistorted 8 watts ----------Maximum 9 watts
(Phono.) Undistorted 10 watts --------Maximum 11 watts

PHONOGRAPH (RP168)

Record capacity ----------Ten 7 in.
Turntable speed ----------45 R.P.M.
Pickup ------6 volts at 1000 cycles across 1 Megohm load

PHONOGRAPH (RP201)

Record capacity ------Ten twelve inch or twelve ten inch
Turntable speed ----------33⅓ or 78 R.P.M.
Pickup dual stylus, rotatable crystal

Refer to the RP168 issue two and RP201 Service Notes for information on the 45 and 33⅓-78 R.P.M. record changers respectively.

Record Changers

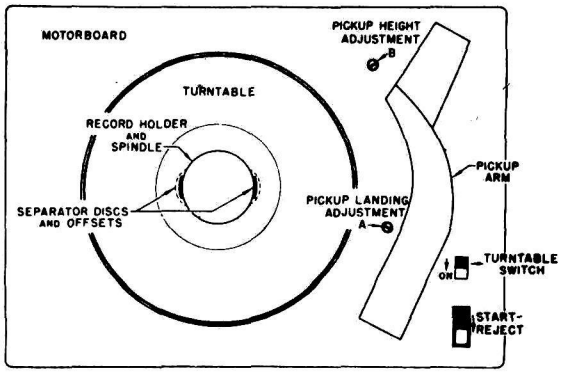

Fig. 1—RP 168 Record Changer

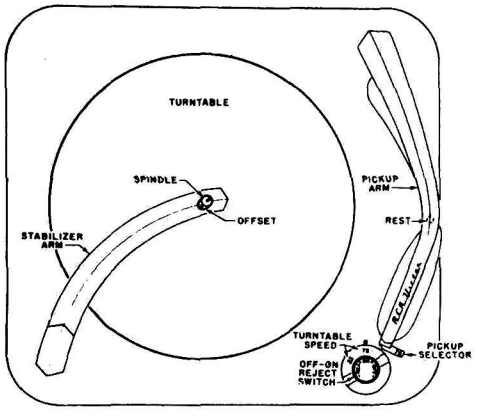

Fig. 2—RP201 Record Changer

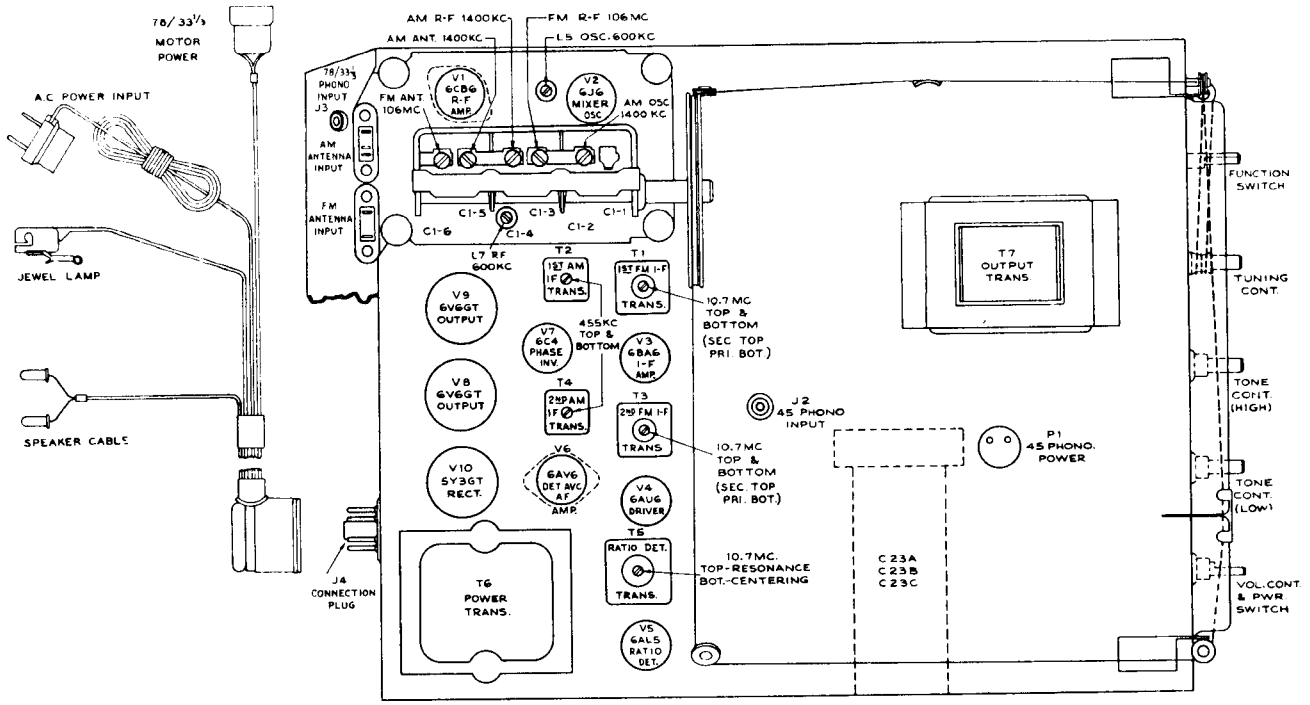

Fig. 3—Chassis Layout & Alignment Adj.

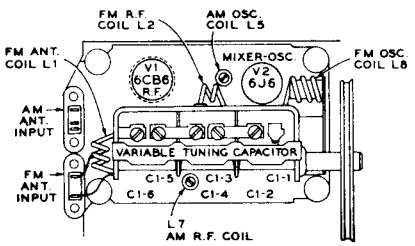

Fig. 4—F.M. Coil Locations

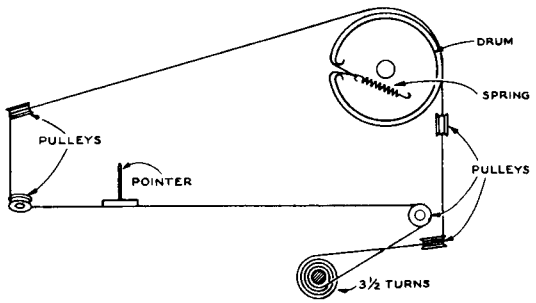

Fig. 5—Dial Cord Stringing

SOCKET VOLTAGES AND CATHODE CURRENT CHART

TUBE	TERMINAL	PHONO V (Volts)	PHONO I	A.M. A.M. V	A.M. A.M. I (MA)	F.M. V	F.M. I (MA)
V1 6CB6 R.F. Amp.	#5 Plate #6 Screen #2 Cathode #1 Grid			203 48 .2 -1.1	3	132 39 .2 -0.9	3
V2 6J6 Mixer & Osc.	#2 Plate #5 Grid #1 Plate #6 Grid #7 Cathode			55 -1.4 33 -2.1	2.6	51 -1.2 27 -1.9	2.6
V3 6BA6 I.F. Amp.	#5 Plate #6 Screen #7 Cathode #1 Grid			192 106 0.9 -1.1	13.2	188 101 -0.35	14.7
V4 6AU6 Driver	#5 Plate #6 Screen #7 Cathode			186 122 1.05	9.3	180 120 1.07	9.0

TUBE	TERMINAL	PHONO V	PHONO I	A.M. V	A.M. I	F.M. V	F.M. I
V5 6AL5 Ratio Det	-			-	-	-	-
V6 6AV6 A.F. Amp.	#7 Plate #1 Grid #2 Cathode	112 -0.7	0.8	94 -0.7	0.5	94 -0.7	0.5
V7 6C4 Ph. Inverter	#1-5 Plate #6 Grid #7 Cathode	125 -19.2 -11.1	2.2	87 -16 -11.4	1.5	85 -16 -11.4	1.5
V8 & V9 6V6GT Output	#3 Plate #4 Screen #5 Grid #8 Cathode	305 299 -19.2	35.6	295 208 -16	17.8	298 204 -16	17.7
V10 5V3GT Rectifier	#2 Filament #2 "	314	74.2	313	75.6	313	74.2

The cathode neutralizing loops of V3 (6BA6) and V4 (6AU6) are insulated wires approx. 2 in. long. Do not alter length.

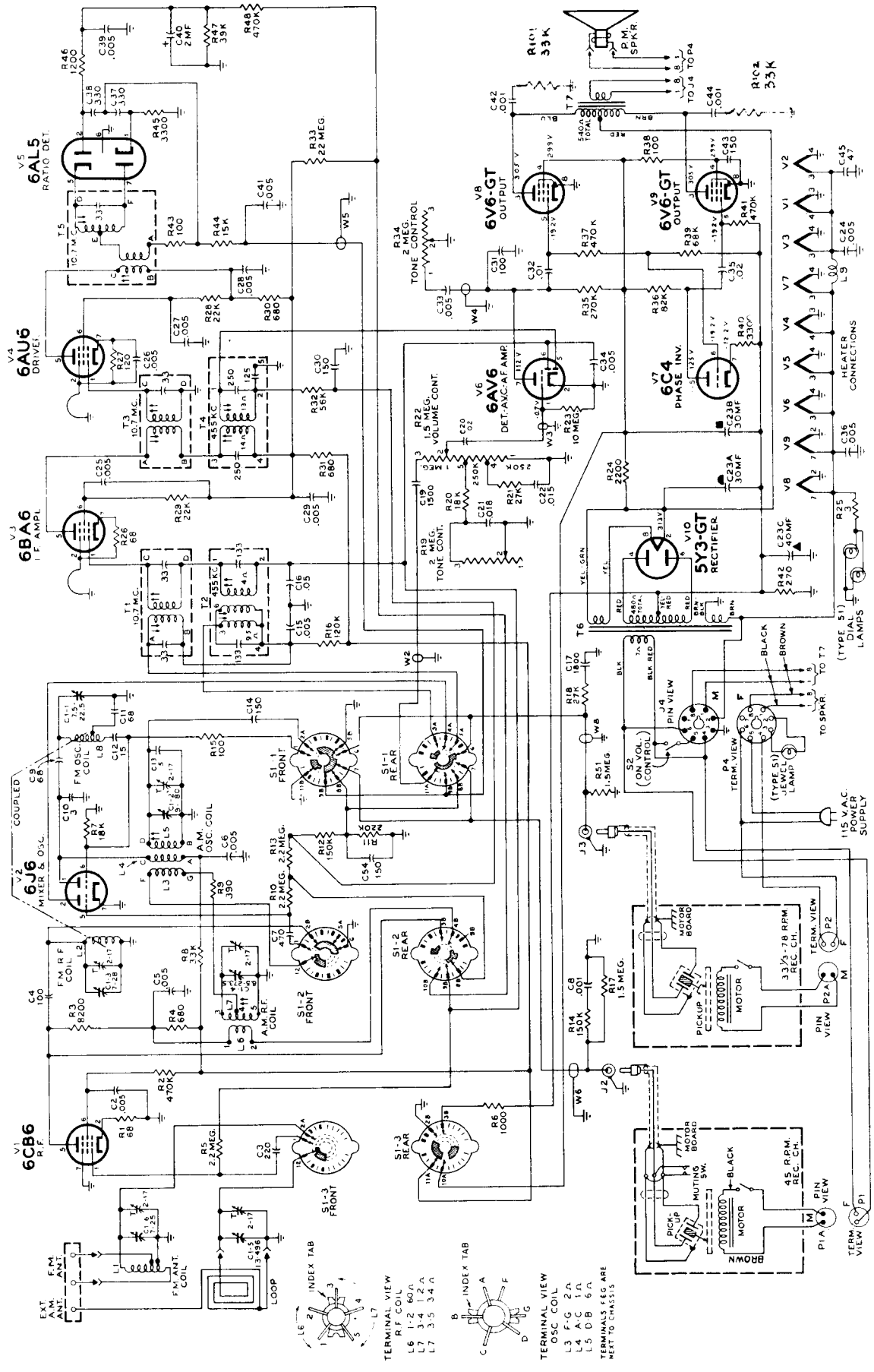

Function switch viewed from front and shown in "Phono 78/33" position (max. c/clockwise).

CAPACITOR VALUES LESS THAN 1 ARE IN MF., VALUES GREATER THAN 1 ARE IN MMF. UNLESS OTHERWISE SPECIFIED.

RESISTANCE VALUES IN OHMS. K = 1000.

VOLTAGES MEASURED TO CHASSIS WITH VOLTOHMYST WITH NO SIGNAL INPUT AND SHOULD HOLD WITHIN ±20% WITH 117-VOLT POWER SUPPLY.

Fig. 6—Schematic Diagram.

Service Data

RECORD CHANGERS

It should be noted, that when the radio is installed in a customer's home, the shipping screws holding the two record changers securely to their respective bases should be removed. This is necessary in order to have both record changers free floating.
When these screws are removed, the record changers are only supported by their mounting grommets and therefore render the mechanism serviceable without too much dismantling.

REMOVAL OF RADIO CHASSIS FROM ITS COMPARTMENT:

The following procedure should be followed in removing the radio chassis from the radio compartment portion of the cabinet:

(a) Remove cabinet back.
(b) Remove spring and pins at the ends of the roll-out carriage.
(c) Pull receiver out of cabinet, from front.

45 R.P.M. CHANGER

REPLACEMENT OF STYLUS

Caution: Never bend the stylus support wire.

CRYSTAL PICKUPS (Stock Nos. 74067)

Remove the two screws holding sapphire guard in place and remove the guard. Remove the small nut and washer on the threaded shaft of the sapphire holder and gently push the shaft through the hole in the armature shaft until the sapphire holder assembly comes free.
Extreme care should be used when loosening the nut so that the twisting motion does not break the crystal. Take hold of the lower end of the shaft with a pair of pliers while loosening or tightening the nut, being very careful so as not to strip the threads or break the crystal.
Insert threaded shaft of replacement sapphire holder through armature shaft and replace the washer and nut. Make sure that the sapphire is in the correct position.
Replace the sapphire guard, position it by means of the oversize screw slots. Make certain that the sapphire and its supporting wire are centered in the guard. Tighten the guard screws. Before using, check to see that the sapphire projects far enough beyond the guard so that the guard will not touch the record. If necessary, bend the guard a little.

REMOVAL OF RADIO CABINET FROM RECEIVER CHASSIS

(a) Remove the two screws from the sides of the cabinet.
(b) Remove the knobs.
(c) Lift cabinet up.

For technical information on record changers, please refer to the RP-168 Record Changer Service Note, Issue No. 2 and the RP-201 Record Changer service note.

REINSERTING RADIO CHASSIS & CABINET INTO RADIO COMP.

(1) Move bearing carriages to the front of the runners.
(2) Hold in this position.
(3) Insert radio chassis runner into carriage, keeping bearing carriages in place, and push receiver chassis unit until the runner is in line with the bearing carriages.
(4) Then remove hold of bearing carriages.
(5) And slide the receiver chassis to the back of the receiver.
(6) Mount pins & spring in runner.
If the chassis has been properly inserted into the carriage, the chassis runner will hit the stop located at the rear left hand side of the radio chassis compartment when receiver unit is pushed in.

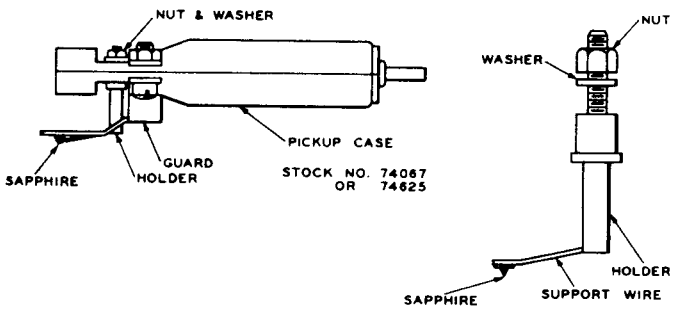

33-1/3—78 R.P.M. CHANGER

Removing Stylus

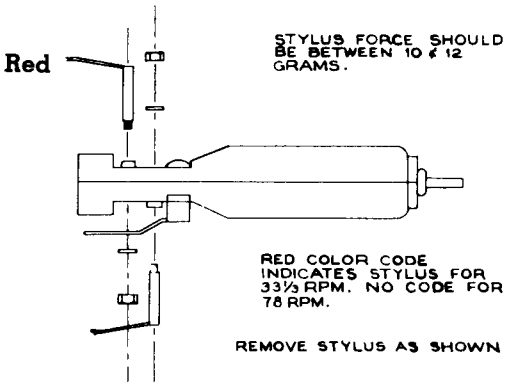

Alignment Procedure

Correct Alignment of the FM Band Requires That the AM Band be Aligned First

Alignment Indicators:

An RCA VoltOhmyst or equivalent meter is necessary for measuring developed d-c voltage during FM alignment. Connections are specified in the alignment tabulation. An output meter is also necessary to indicate minimum audio output during FM Ratio Detector alignment. Connect the output meter across the speaker voice coil.

The RCA VoltOhmyst can also be used as an AM alignment indicator, either to measure audio output or to measure a-v-c voltage.

When audio output is being measured the volume control should be turned to maximum.

Signal Generator:

For all alignment operations connect the low side of the signal generator to the receiver chassis. The output should be adjusted to provide accurate resonance indication at all times. If output measurement is used for AM alignment the output of the signal generator should be kept as low as possible to avoid a-v-c action.

Critical Lead Dress

Note: The leads listed may not be critical in all receivers. However, by dressing the leads as specified, unusual difficulties will be minimized.

1. The 2.2 meg mixer grid resistor (R10) should have a minimum practicable amount of lead extending on the grid end.
2. The first A.M. and first F.M. I.F. plate leads should be dressed away from the range switch wafer.
3. The ground strap between the R.F. shelf and the main chassis should be well soldered and kept as short as practicable.
4. Arrange wiring to prevent the filament wire between the mixer (6J6) and 1st I.F. (6BA6) tubes from passing near either the mixer grid, or the A.V.C. wiring.
5. Dress filament wires away from all audio coupling condensers.

Critical Lead Dress (Cont'd)

6. Dress A.C. power switch wires away from the audio coupling condenser (C20) which is wired to the volume control.

7. Dress the mixer grid coupling condenser (C7) away from the lugs on the front range switch wafer.

8. The 1st I.F. tube A.V.C. by-pass condenser (C16) should ground at the same point as the cathode neutralizing loop.

9. The driver tube plate and screen by-pass condensers (C27, C28) should ground at the same point as the neutralizing loop.

10. The mixer plate by-pass condenser (C15) should ground as close to the R.F. shelf ground strap as practicable.

11. The shielded audio leads connecting to the front function switch wafer should have a minimum of exposed lead on the function switch end.

ALIGNMENT CHART

ORDER OF ALIGNMENT		TEST OSCILLATOR				RECEIVER				
		CONNECT 'H' SIDE TO	CONNECT 'LO' SIDE TO	DUMMY ANTENNA	FREQUENCY SETTING	RANGE SELECTOR	DIAL SETTING	CIRCUIT ADJUST	ADJUSTMENT SYMBOLS	NOTES
AM-I.F. Alignment	1	C1-4 Stator	Gnd	Mfd	455 K.C.	A.M.	'LO' End	I.F. Trans.	†T-4 ‡T-2	Max. Out
	†	First peak T-2 and T-4 then starting with T-4, use alternate loading, connect A 47000 ohm. resistor across the primary to load the plate winding while the grid winding of the same transformer is being peaked. Then load the grid winding with the 47000 ohm. resistor while the plate winding is being peaked.								
AM - RF Alignment	2	Ant. Ter.	Gnd	200 uuf	1620 K.C.	A.M.	'HI' End	Osc.	C1-2 Trimmer	Max. Out
	3	Same	Same	Same	1400 K.C.	Same	1400 K.C.	R.F.	C1-4 Trimmer	Same
	4	Same	Same	Same	Same	Same	Same	Ant.	C1-5 Trimmer	Same
	5	Same	Same	Same	600 K.C.	Same	600 K.C.	Osc.	L-5	Same
	‡	With a 10,000 ohm. resistor shunted across C1-4, peak the oscillator core L-5, simultaneously "Rocking" the gang condenser for maximum output. Then remove the 10,000 ohm. shunt resistor and peak L-7 for maximum output.								
	6	Ant. Ter.	Gnd	200 uuf	600 K.C.	A.M.	600 K.C.	R.F.	L-7	Max. Out
	7	Repeat steps 2 to 6								
FM-Ratio Det. Alignment	8	Connect the D-C probe of a voltohmyst to the negative lead of the 2 mfd. capacitor C40 and the Common lead to chassis. Adjust sig. gen. output to provide approx. - 3v indication during alignment.								
	9	Pin #1 6AU6	GND	.01 ufd	10.7 MC AM Mod.	F.M.		Top Driver Trans.	T-5	Max. D.C. Voltage
	10	Same	Same	Same	Same	Same		†Bottom Driver Trans.	T-5	Min. Audio. Output
	†	Two or more points may be found which lower the audio output. At the correct point the minimum audio output is approached rapidly and is much lower than at any incorrect point.								
	11	Repeat steps 9 & 10								
F.M. I.F. Alignment	12	C1-3 Stator	Close to V-2 Cathode	470 ohms.	10.7 M.C.	F.M.	88 MC	I.F.	*T-3	Max. Out
	13	Same	Same	Same	Same	Same	Same	Same	*T-1	Same
	*	Use a 680 ohm resistor to load the plate winding while the grid winding of the same trans. vs being peaked. Then the grid winding is loaded with the 680 ohm resistor while the plate winding is being peaked. When windings are loaded, it is necessary to increase the 10.7 MC input to maintain the - 3 volts indication.								
FM RF Alignment	14	F.M. Ant. Ter.	F.M. Ant. Ter.	120 phms. in each line	90 M.C.	F.M.	90 M.C.	Osc.	L-8	Max. Out
	15	Same	Same	Same	106 M.C.	Same	106 M.C.	Ant.	C1-6 Trimmer	Same
	16	Same	Same	Same	Same	Same	Same	R.F.	C1-3 Trimmer	Same
	17	Same	Same	Same	90 M.C.	Same	90 M.C.	Ant.	L-1	Same
	18	Same	Same	Same	Same	Same	Same	R.F.	L-2	Same
	19	Repeat steps 14 to 18								
NOTE		Connect a sweep generator to the antenna terminals thru 120 ohms. in each side of line. Connect an oscilloscope to junction of R44 and C41 to check response and linearity of FM Band. Peak to peak separation should not be less than 180 K.C.								

L-8, L-1 and L-2 are adjustable by increasing or decreasing the spacing between turns. Oscillator signal tracks above signal frequency.

REPLACEMENT PARTS FOR MODEL V-310

Insist on genuine factory tested parts, which are readily identified and may be purchased from authorized dealers.

STOCK NO.	DESCRIPTION
	CHASSIS ASSEMBLY
*75567	Condenser-Gang Tuning (C1-1,C1-2,C1-3,C1-4, C1-5,C1-6)
*74733	Capacitor-Ceramic-3 mmf. +-10% 500 v.(C10)
*75613	" Ceramic-5 mmf. +-10% 1 mmf, 500v. (C13)
31353	Capacitor-Ceramic-15 mmf. +-10% 500 v.(C12)
*75609	" -Ceramic-47 mmf. 500v. (C45)
*S-5545	" -Ceramic-68 mmf. +-10% 500v.(C9,C11)
*45233	" -Ceramic-100 mmf. +-10% 500v. (C4)
*75437	" -Ceramic-100 mmf. +-20% 500v. (C31)
*75614	" -Ceramic-150 mmf. +-20% 500v. (C14, C30,C43,C54)
*75611	" -Ceramic 220 mmf. +-20%,500v. (C3)
39640	" -Mica 330 mmf. +-10% 500v. (C37,C38)
*72571	" -Mica 470 mmf. +-20% 300v. (C7)
*75610	" -Ceramic 1500 mmf. +-20% 500v. (C19)
	" -Ceramic 1800 mmf. +-10% 500v. (C17)
*73473	" -Ceramic 5000 mmf. 500v. (C2,C5,C6, C15,C24,C25,C27,C28,C29,C33,C34,C36)
	" -Paper .001 mfd. +-10% 200v. (C8)
	" -Paper .001 mfd. +-10% 1000v.(C42,44)
	" -Paper .005 mfd. +-10% 200v. (C39)
	" -Paper .005 mfd. +-20% 200v. (C26,C41)
*S-5643	" -Paper .01 mfd. +-20% 400v. (C32)
	" -Paper .015 mfd. +-10% 200v. (C22)
*58476	" -Paper Oil .018 mfd. +-10% 200v.(C21)
	" -Paper .02 mfd. +-10% 100v.(C20)
	" -Paper .02 mfd. +-20% 400v.(C35)
	" -Paper .05 mfd. +-20% 200v.(C16)
*73747	" Electrolytic-2 mfd. 50 v. (C40)
*72052	" " 30 mfd. 350 v.(C23B)
	" " 30 mfd. 450 v.(C23A)
	" " 40 mfd. 25 v.(C23C)
*75570	Coil-A.M. RF. (L6,L7)
*75569	" AM Oscillator (L3,L4,L5)
*75615	" FM Antenna (L1)
*74815	" FM RF (L2)
*74817	" FM Oscillator (L8)
*71942	" Filament Choke (L9)
*75537	Control-Vol. & Power switch (R22)
*75561	" -Tone, L.F. (R19)
*75562	" " H.F. (R34)
S-4313	Cord-Drive Cord-
	Lamp-Dial lamp (2) Mazda (51)
*75536	Pointer-Stn. Selector
	Resistors-68 ohms +-10%, 1/2 watt (R1,26)
	" -100 ohms +-10%,1/2 watt (R15,38,43)
	" -120 ohms +-10%,1/2 watt (R27)
	" -270 ohms +- 5%, 2 watts (R42)
	" -390 ohms +-10% 1/2 watts(R9)
	" -680 ohms +-10% 1/2 watts(R4)
	" -680 ohms +-20% 1/2 watt (R30,31)
	" -1000 ohms +-10% 1/2 watt (R6)
	" -1200 ohms +-5% 1/2 watt (R46)
	" -3300 ohms +-5% 1/2 watt (R40,R45)
	" -8200 ohms +-10% 1 watt (R3)
	" -15,000 ohms +-10% 1/2 watt (R44)
	" -18,000 ohms +-10% 1/2 watt (R7,R20)

STOCK NO.	DESCRIPTION
	CHASSIS ASSEMBLY (Cont'd.)
	Resistors-22,000 ohms +-10% 1/2 watt(R28,29)
	" -27,000 ohms +-10% 1/2 watt(R18,R21)
	" -33,000 ohms +-10% 1/2 watt(R2,R8, 101-102)
	" -39,000 ohms +-5% 1/2 watt (R47)
	" -39,000 ohms +-10% 1 watt (R16)
	" -56,000 ohms +-10% 1/2 watt (R32)
	" -68,000 ohms +-10% 1/2 watt (R39)
	" -82,000 ohms +-10% 1/2 watt (R36)
	" -120,000 ohms+-10% 1/2 watt (R8,R16)
	" -150,000 ohms+-10% 1/2 watt(R12,R14)
	" -220,000 ohms+-20% 1/2 watt (R11)
	" -270,000 ohms+-10% 1/2 watt (R35)
	" -470,000 ohms+-10% 1/2 watt (R37, R41,R48)
	" -1.5 Megohm +-10% 1/2 watt(R17,R51)
	" -2.2 Megohm +-20% 1/2 watt(R5,10,13)
	" -10 Megohm +-20% 1/2 watt (R23)
	" -22 Megohm +-20% 1/2 watt (R33)
	" -W.W.3-Ohms +-10% 1/2 watt (R25)
S-5908	" -W.W.2200 ohms +-10% 5 watt(R24)
*75565	Shaft-Exten.shaft for function switch
*74038	Spring-Drive cord spring
*75602	Switch-Function switch (S1-1,S1-2,S1-3)
*75557	Transformer-Output transf. (T7)
*733743	" -Ratio Det.Transf. (T5)
*75558	" -1st I.F. Transf. (AM) (T2)
*73037	" -2nd I.F. " " (T4)
*75559	" -1st I.F. " (FM) (T1)
*75560	" -2nd I.F. " " (T3)
*S-9151	" -Power Transf.25/60 cy.(T6)
S-4379	" " " 60 cy.
	SPEAKER ASSEMBLY
S-4288	Speaker 12" P.M.
S-4299	Cone & Voice Coil
	MISCELLANEOUS ASSEMBLY
*75705	Antenna Loop
S-5533	Bracket-Stop bracket
*74882	Connector-Male,2 contacts for Ant.loop
*74752	" -Male 2 contacts for FM. Term. Board Cable
*75709	" -8 contacts for main cable (P4)
30868	" -Female connector for 33-1/3 and 78 RPM Record Changers
*75474	" -Speaker plug
S-5935	Decal
S-5565	Decal
75572	Dial Scale
S-5988	Hinge-R.H. hinge
S-5989	Hinge-L.H. hinge
*75712	Knob-Control (4)
*75714	Knob-Function switch
	Lamp-Pilot Lamp - Mazda (51)

N O T E:

(*) Indicates New Stock Items.

N O T E:

(*) Indicates New Stock Items.

All parts subject to change or withdrawal without notice.

Only items listed under Stock Numbers are available as Replacement Parts.

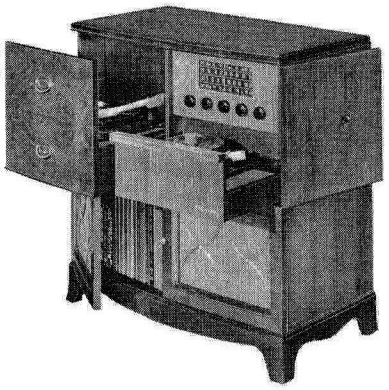

MODEL V-312

RCA VICTOR

"HIS MASTER'S VOICE"

RADIO & DUAL PHONOGRAPH COMBINATION

MODEL V-312

SERVICE DATA

— 1950 No. 19 —

GENERAL SERVICE DIVISION
RCA VICTOR COMPANY LIMITED
MONTREAL, QUE.

Electrical and Mechanical Specifications

Frequency Ranges:

Standard Broadcast	540-1600	KC.
Short Wave "SW_1"	5.8-10	MC.
Short Wave "SW_2"	11.4-18.2	MC
Frequency Modulation "FM"	88-108	MC

I.F. Frequencies

Amplitude Modulation	455	KC
Frequency Modulation	10.7	MC

Tube Complement

(1)	RCA	6BA6	R.F. Amplifier
(2)	RCA	6BE6	A.M. Converter
(3)	RCA	6J6	F.M. Converter
(4)	RCA	6BA6	A.M.—F.M. IF Amplifier
(5)	RCA	6AU6	F.M. IF Amplifier
(6)	RCA	6AL5	Ratio Detector
(7)	RCA	6AV6	Audio
(8)	RCA	6AV6	Det.—A.V.C. Phase Inverter
(9)	RCA	6C4	Driver
(10)	RCA	6V6GT	Output
(11)	RCA	6V6GT	Output
(12)	RCA	5Y3GT	Rectifier

DIAL LAMPS	(2) Mazda 51
PILOT LAMP	(1) Mazda 51
TUNING DRIVE RATIO	(19:1) or 9½ turns of knob.

POWER OUTPUT

Undistorted	8	Watts
Maximum	12	watts

Loudspeaker

Type	12" P.M.
Voice Coil Impedance	2.2 ohms at 400 cycles

Power Supply Ratings:

Rating A-105-125 volts, 60 cycles, 1.0 amp.	115	watts
Rating B-105-125 volts, 25 cycles, 1.0 amp.	115	watts

Cabinet Dimensions:

Height	34	inches
Width	35½	"
Depth	17	"

Phonograph (45 RPM)

Type	RP-168C
Record Capacity	Eight 7 inch
Turntable speed	45 R.P.M.
Pickup	Crystal (Medium Output)

Phonograph (33⅓ - 78 RPM)

Type	RP-201
Record capacity	Twelve 10 inch or Ten 12 inch
Turntable Speed	33⅓—78 R.P.M.
Pickup	Dual Stylus—Rotatable Crystal (Standard Output)

General Description

The RCA Victor Model V-312 receiver is a twelve tube, four bands, long and short wave AM-FM radio phonograph combination.

The receiver tunes the standard broadcast band (540-1600 KC); the short wave bands (16 M to 49 M) (in two ranges) and the F.M. band (88-108 MC). The receiver incorporates an R.F. amplifier on the AM, long and short wave bands, and a combined oscillator and mixer for the F.M. band. The A.M. section has one stage of I.F. amplification which gives good sensitivity and adequate gain for the audio stages. The F.M. section has two stages of I.F. amplification, the second being the driver for the Ratio Detector. The audio amplifier in this receiver is of the high quality type incorporating a "High" and "Low Frequency" tone control and delivers an undistorted output of eight watts.

The receiver also incorporates the latest RCA Victor 45 R.P.M. (RP-168C) record changer, and the new RP201 record changer, which may be selected by the range switch.

Antenna Connections

The Model V-312 receiver has two internal antennas housed in the cabinet. A loop antenna for standard broadcast; and a folded dipole for F.M. and short wave reception.

Standard Broadcast:

The loop antenna is very sensitive and therefore should result in good signal pickup, but in some cases, where the noise level is high or reception is weak, it is recommended that an external antenna be used. To connect an external antenna, connect the 'lead in' from the external antenna to terminal No. 3 on the antenna terminal board.

If reception is not improved, that is, the noise level still persists, it is advisable to check and see if the noise is being picked up by the loop antenna; if it is, terminal No. 1 and 2 of the antenna terminal board must be shorted. This short circuits the loop antenna and detunes the input circuit. It is then necessary to re-adjust the antenna core (L-1) at 580 KC and the trimmer (C-5) at 1500 KC. No other adjustments should be made.

Short Wave Antenna:

The short wave antenna consists of the F.M. folded dipole antenna, with the input terminals 3 and 4 short circuited by S-3 on Range switch position SW_1 and SW_2. This makes the FM dipole antenna act as the internal short wave antenna. Should the location be such, that short wave reception be poor, an external antenna is recommended. This external antenna should be connected to terminal No. 3 of the antenna terminal board.

Frequency Modulation:

The antenna used on the F.M. band, is the F.M. folded dipole, which is located in the cabinet. Should, due to receiver position in the house or other obstruction such as high buildings or being located at a great distance away from the transmitting antenna, cause poor or weak F.M. reception, an external dipole antenna is recommended. The internal dipole should be disconnected from terminal 3 and 4 of the antenna terminal board, and the external dipole lead-in should be connected in its place.

NOTE:

If the receiver is connected to an external F.M. dipole antenna, it is not necessary to install any external short wave or broadcast band antenna. The reason being that the dipole and antenna lead in form a good antenna for the broadcast and short wave bands.

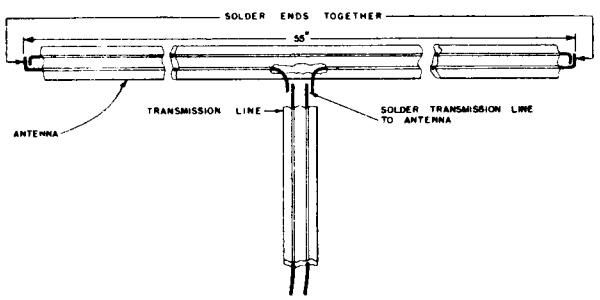

FIG. 1 F.M. FOLDED DIPOLE IN CABINET

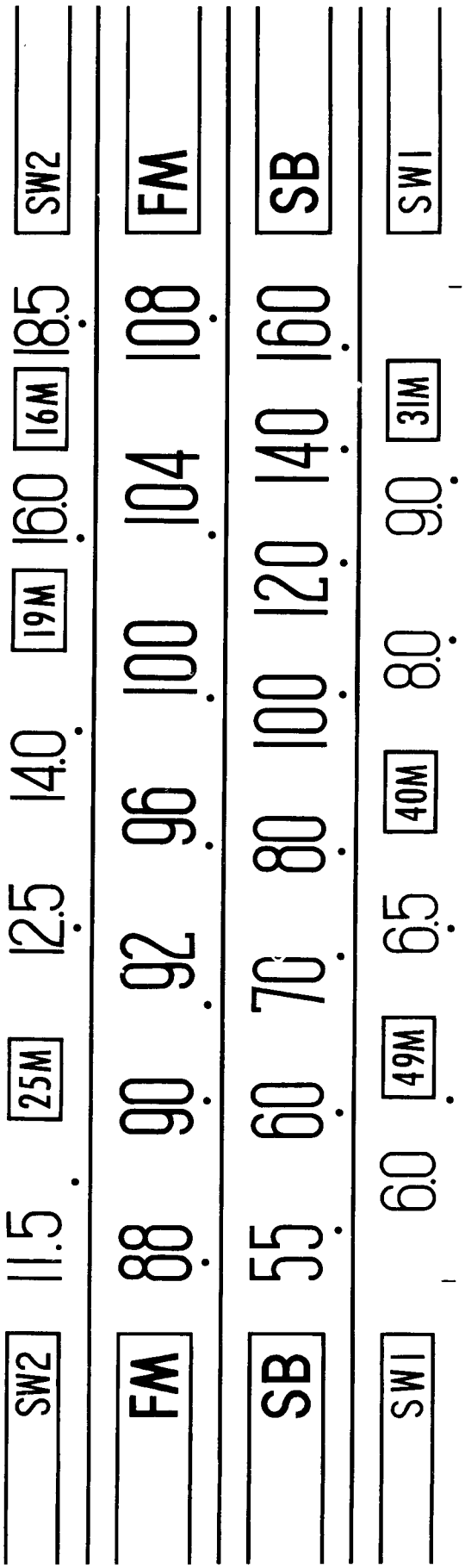

FIG. 2 DIAL SCALE DRAWING (FULL SCALE)

Critical Lead Dress

(1) Keep blue lead from ratio detector, pin "D" to 6AL5 Pin 5, as short as possible.

(2) Keep brown lead from 6AV6 and red from terminal board away from aforementioned blue lead.

(3) Keep B + lead, from pin 5 of S-4 (rear), away from FM antenna transmission line.

NOTE:

Make sure that the special "disc" type capacitors are always replaced by similar types. The reason being, that paper capacitors of the same value are not as efficient.

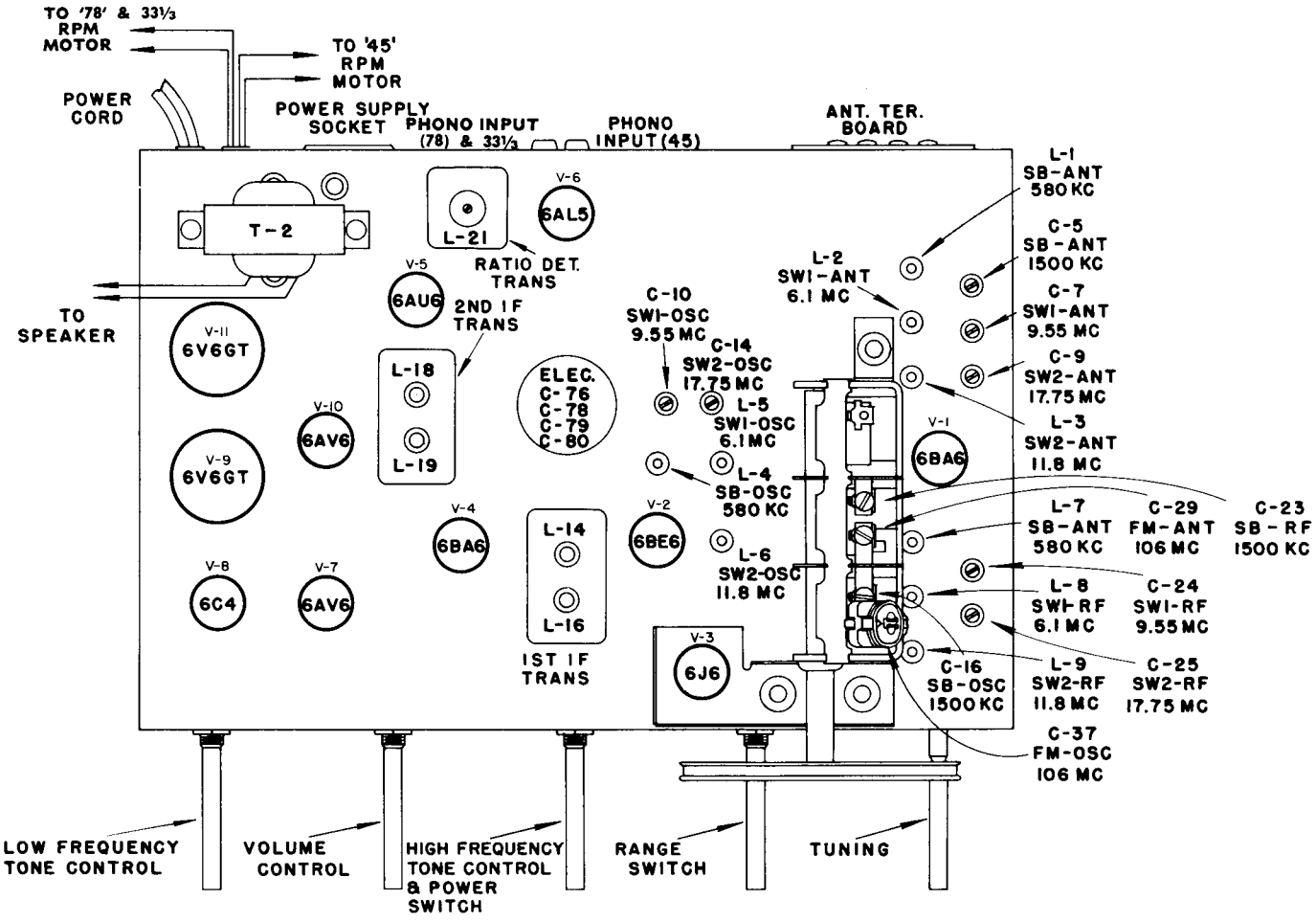

FIG. 3 CHASSIS LAYOUT & ALIGNMENT ADJUSTMENTS

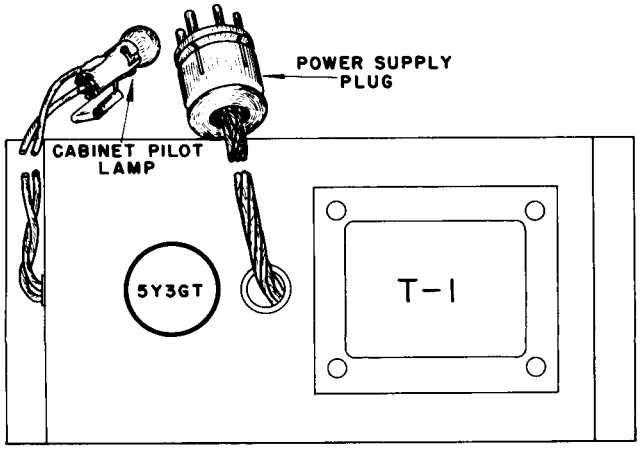

FIG. 4 POWER SUPPLY CHASSIS LAYOUT

Alignment Procedure

Before aligning the receiver follow procedure outlined below:

(1) Set pointer opposite 60 on the dial scale.

(2) Unhook the pointer from the dial cord, without disturbing its position.

(3) Set gang at maximum capacity, fully meshed.

(4) Move pointer one inch to the right.

(5) Hook up pointer to dial cord.

This gives the initial position of the pointer before alignment.

When only a portion of the circuit is to be aligned, select the required portion and perform all the remaining steps.

It is recommended that the I.F.'s be aligned with a cathode ray oscilloscope and sweep generator. If this equipment is not available, use the method outlined in the alignment chart.

ALIGNMENT CHART

ORDER OF ALIGNMENT		TEST OSCILLATOR				RECEIVER				
		CONNECT "HI" SIDE TO	CONNECT "LO" SIDE TO	DUMMY ANTENNA	FREQUENCY SETTING	RANGE SELECTOR	DIAL SETTING	CIRCUIT TO ADJUST	ADJUSTMENT SYMBOLS	NOTES
A.M.-I.F. ALIGNMENT	1	V-4 6BA6 Pin 1	Gnd	.1 mfd.	455 Kc	S.B.	"HI END"	2nd I.F. Trans.	L-19 L-20	Max. Out
	2	S-1 Rear Pin 1	Same	Same	Same	Same	Same	1st I.F. Trans.	L-15 L-16	Same
	3	Repeat Steps 1 & 2.								
S.B. ALIGNMENT	4	Ter. Board Ter. 1	Gnd	220 mmf	580 Kc	S.B.	580 Kc	Osc. R.F. Ant.	L-4 L-7 L-1	Max. Out
	5	Same	Same	Same	1500 Kc	Same	1500 Kc	Osc. R.F. Ant.	C-16 C-23 C-5	Same
	6	Repeat Steps 4 & 5.								
S.W.1 ALIGNMENT	7	Ter. Board Ter. 3	Gnd	300 Ohms	6.1 Mc	S.W.1	6.1 Mc	Osc. R.F. Ant.	L-5 L-8 L-2	Max. Out
	8	Same	Same	Same	9.55 Mc	Same	9.55 Mc	Osc. R.F. Ant.	C-10 C-24 C-7	Same
	9	Repeat Steps 7 & 8.								
S.W.2 ALIGNMENT	10	Ter. Board Ter. 3	Gnd	300 Ohms	11.8 Mc	S.W.2	11.8 Mc	Osc. R.F. Ant.	L-6 L-9 L-3	Max. Out
	11	Same	Same	Same	17.75 Mc	Same	17.75 Mc	Osc. R.F. Ant.	C-14 C-25 C-9	Same
	12	Repeat Steps 10 & 11.								
F.M.-RATIO DET. ALIGNMENT	13	Connect Voltohmyst probe to negative side of 2 mfd. electrolytic (C-60) Capacitor and low side to chassis.								
	14	V-5 6AU6 Pin 1	Gnd	.1 mfd.	10.7 Mc (Standard)	F.M.	"HI End"	Ratio Det. Trans.	L-21	Max. Out On Voltohmyst
	15	Same	Same	Same	Same	Same	Same	Same	L-22	Min. Out.*
	16	Repeat Steps 14 & 15								
F.M.-I.F. ALIGNMENT	17	V-4 6BA6 Pin 1	Gnd	.1 mfd.	10.7 Mc (Standard)	F.M.	"HI End"	2nd I.F. Trans.	L-17 L-18	Max. Out. on Voltohmyst
	18	Connect 1000 Ohm Resistor across 2nd I.F. Primary Ter. A. & H. Re-Adjust secondary L-18 at 10.7 Mc for maximum D.C. Voltage on Voltohmyst.								
	19	Remove 1000 Ohm Resistor and connect across 2nd I.F. Trans. Primary Ter. C.& E. Re-Adjust Primary L-17 at 10.7 Mc for maximum D.C. Voltage on Voltohmyst								
	20	Remove Resistor								
	21	Ter. Board Ter. 4	Gnd	.1 mfd.	10.7 Mc (Standard)	F.M.	"HI End"	1st I.F. Trans.	L-13 L-14	Max. Out. on Voltohmyst
	22	Connect 1000 Ohm Resistor across 1st I.F. Trans. Primary Ter. A. & C. Re-Adjust Secondary L-14. at 10.7 Mc for Maximum D.C. Voltage on Voltohmyst.								
	23	Remove 1000 Ohm Resistor and Connect across 1st I.F. Secondary Ter. D. & E. Re-Adjust Primary L-13 at 10.7 Mc for Maximum D.C. Voltage on Voltohmyst.								
F.M.-ANT. & OSC. ALIGNMENT	24	Ter. Board Ter. 4	Gnd	300 Ohms	106 Mc (Standard)	F.M.	106 Mc	Osc. Ant.	C-37 C-29 (Rock In)	Max. Out.
	25	Same	Same	Same	89 Mc (Standard)	Same	89 Mc	Osc. Ant.	Adj. Spacing L-11 " " L-10	Same
	26	Repeat Steps 24 & 25.								

* Two or more points may be found which lower the audio output; at the correct point the minimum audio output is approached rapidly and is much lower than at any incorrect point. Due to this fact it is advisable to first, determine the correct peak by feeding in a 10.7 Mc (F.M.) signal with a sweep of about 20 Kc., then align the bottom core for maximum output. Switch the generator to A.M. and retouch the core for minimum audio output. Always check the response of the ratio detector on the scope to obtain best results.

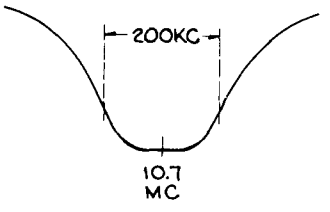

2nd I.F. Response

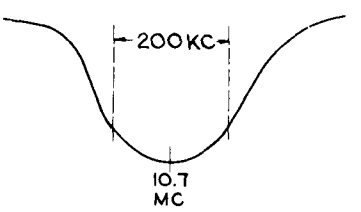

1st and 2nd I.F. Response

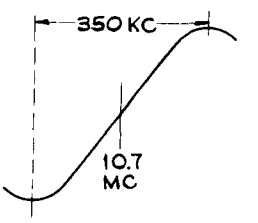

Ratio Det. Response

Fig. 5—F.M. Response Curves

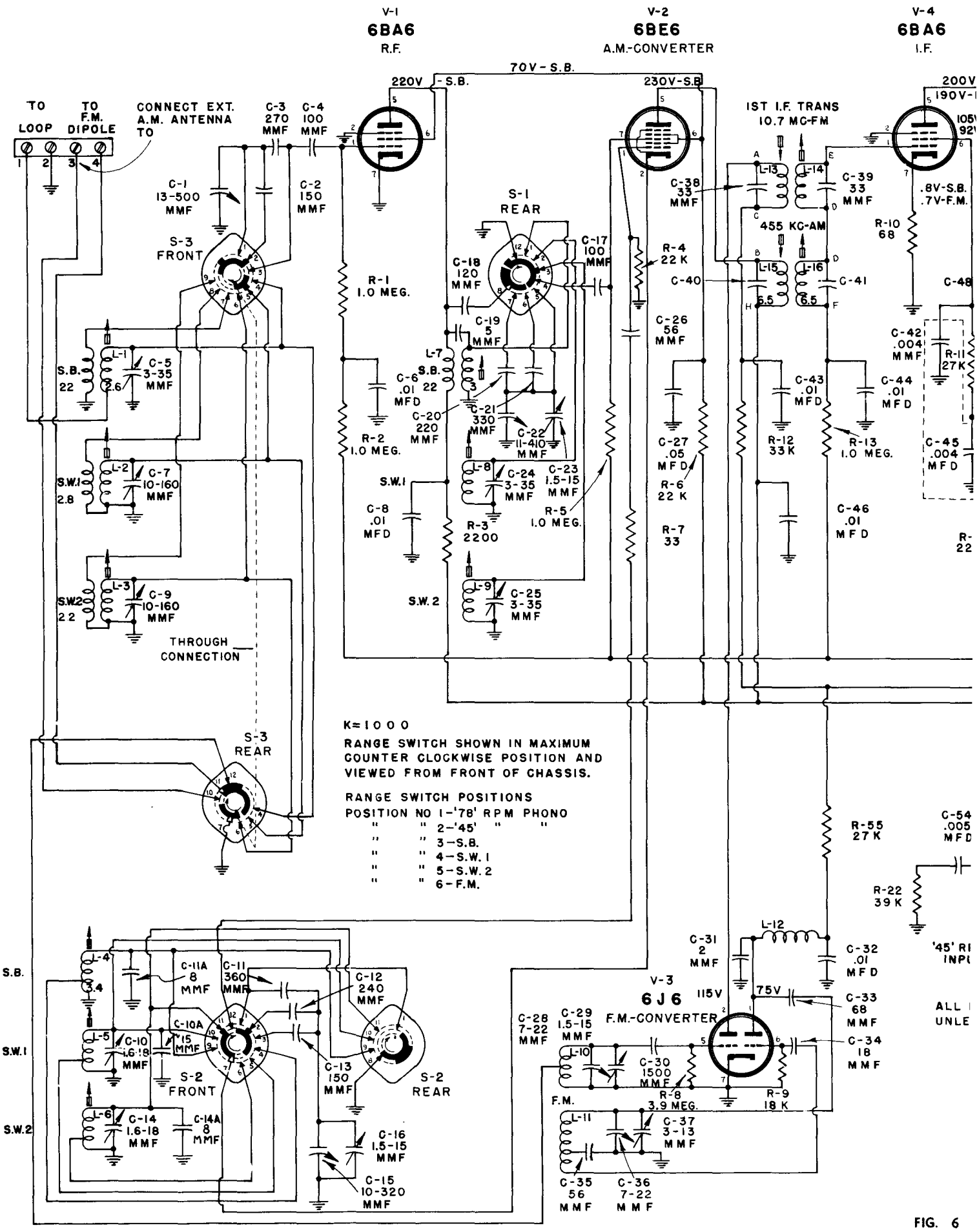
V-1
6BA6
R.F.
V-2
6BE6
A.M.-CONVERTER
V-4
6BA6
I.F.
70V-S.B.
220V-S.B.
230V-S.B.
TO LOOP
TO F.M. DIPOLE
CONNECT EXT. A.M. ANTENNA TO
C-3 270 MMF
C-4 100 MMF
C-1 13-500 MMF
C-2 150 MMF
S-3 FRONT
S-1 REAR
C-18 120 MMF
C-17 100 MMF
R-1 1.0 MEG.
R-2 1.0 MEG.
C-19 5 MMF
C-6 .01 MFD
C-20 220 MMF
C-21 330 MMF
C-22 11-410 MMF
C-23 1.5-15 MMF
C-24 3-35 MMF
C-8 .01 MFD
R-3 2200
R-5 1.0 MEG.
C-25 3-35 MMF
S.W.1
S.W.2
S.B. 22
S.W.1 2.8
S.W.2 2.2
C-5 3-35 MMF
C-7 10-160 MMF
C-9 10-160 MMF
THROUGH CONNECTION
S-3 REAR
1ST I.F. TRANS 10.7 MC-FM
455 KC-AM
C-38 33 MMF
C-39 33 MMF
C-40
C-41
R-4 22 K
C-26 56 MMF
C-27 .05 MFD
R-6 22 K
R-7 33
C-43 .01 MFD
C-44 .01 MFD
R-12 33 K
R-13 1.0 MEG.
C-46 .01 MFD
R-10 68
.8V-S.B. .7V-F.M.
C-42 .004 MMF
R-11 27K
C-45 .004 MFD
K=1000
RANGE SWITCH SHOWN IN MAXIMUM COUNTER CLOCKWISE POSITION AND VIEWED FROM FRONT OF CHASSIS.
RANGE SWITCH POSITIONS
POSITION NO 1-'78' RPM PHONO
" " 2-'45' " "
" " 3-S.B.
" " 4-S.W. 1
" " 5-S.W. 2
" " 6-F.M.
R-55 27 K
C-54 .005 MFD
R-22 39 K
'45' RI INPU
ALL UNLE
C-31 2 MMF
C-32 .01 MFD
V-3
6J6
F.M.-CONVERTER
115V
75V
C-33 68 MMF
C-34 18 MMF
C-28 7-22 MMF
C-29 1.5-15 MMF
C-30 1500 MMF
R-8 3.9 MEG.
R-9 18 K
F.M.
C-37 3-13 MMF
C-35 56 MMF
C-36 7-22 MMF
C-11A 8 MMF
C-11 360 MMF
C-12 240 MMF
C-10A 15 MMF
C-10 1.6-18 MMF
C-13 150 MMF
S-2 FRONT
S-2 REAR
C-14 1.6-18 MMF
C-14A 8 MMF
C-16 1.5-15 MMF
C-15 10-320 MMF

FIG. 6

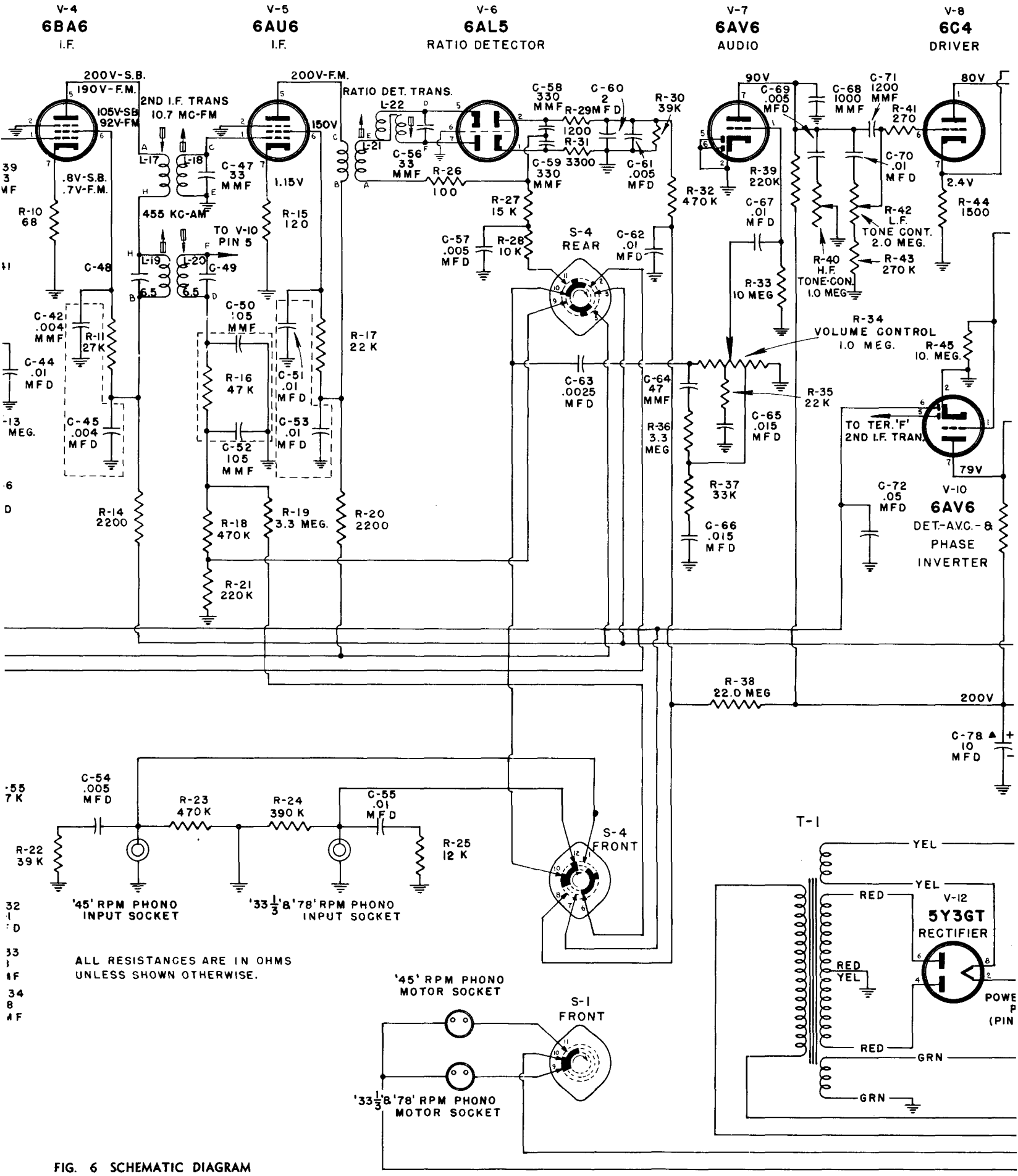

FIG. 6 SCHEMATIC DIAGRAM

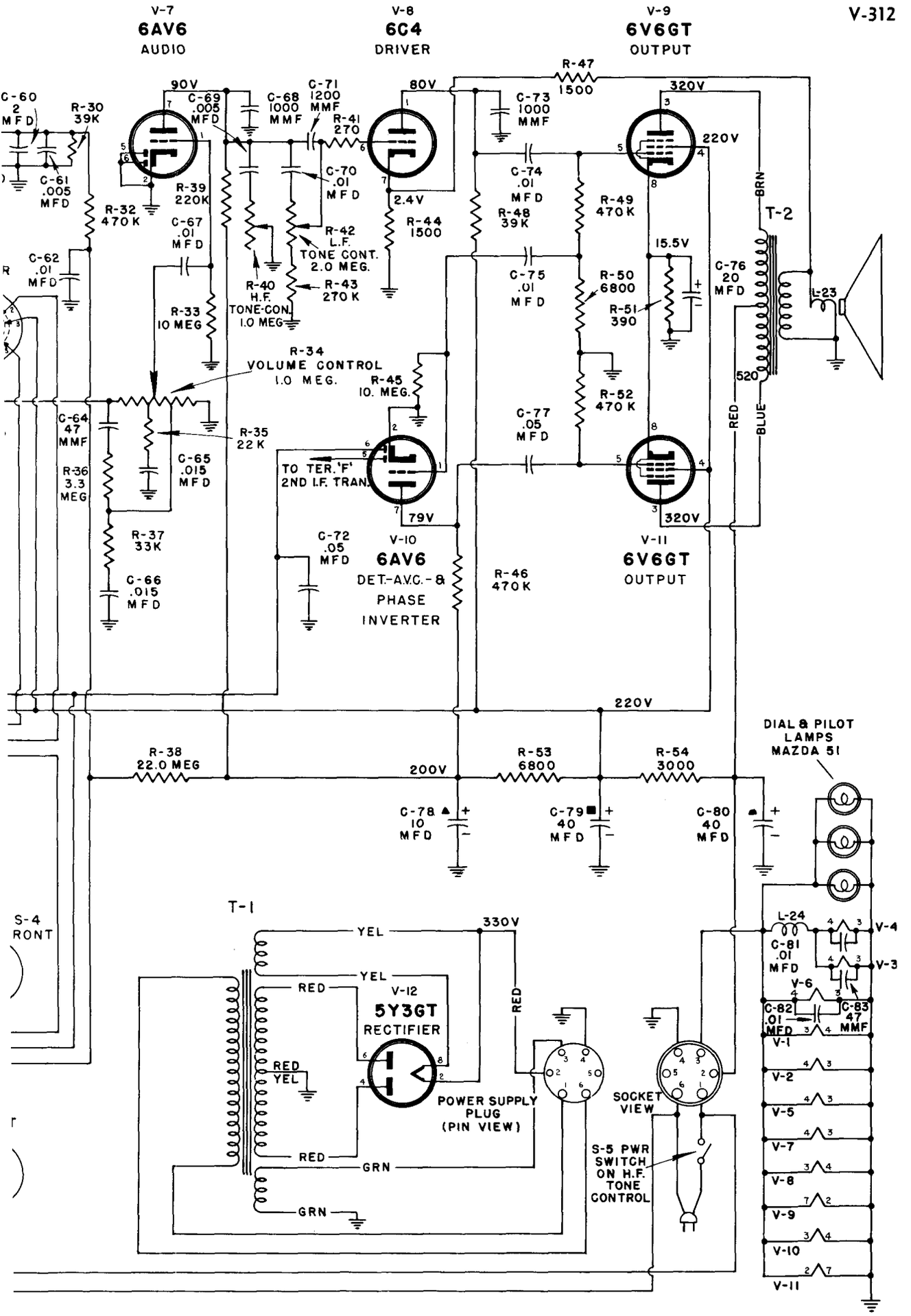
V-7
6AV6
AUDIO
V-8
6C4
DRIVER
V-9
6V6GT
OUTPUT
R-47
1500
90V
80V
320V
C-60
2
MFD
R-30
39K
C-69
.005
MFD
C-68
1000
MMF
C-71
1200
MMF
R-41
270
C-73
1000
MMF
220V
C-61
.005
MFD
C-70
.01
MFD
C-74
.01
MFD
R-39
220K
2.4V
R-49
470K
BRN
T-2
R-32
470K
C-67
.01
MFD
R-42
L.F.
TONE CONT.
2.0 MEG.
R-48
39K
15.5V
C-62
.01
MFD
R-40
H.F.
TONE CON.
1.0 MEG
R-43
270K
C-75
.01
MFD
R-50
6800
C-76
20
MFD
L-23
R-33
10 MEG
R-51
390
R-34
VOLUME CONTROL
1.0 MEG.
R-45
10. MEG.
520
R-52
470K
C-64
47
MMF
R-35
22K
C-77
.05
MFD
RED
BLUE
C-65
.015
MFD
R-36
3.3
MEG
TO TER. 'F'
2ND I.F. TRAN.
79V
320V
R-37
33K
C-72
.05
MFD
V-10
6AV6
DET.-A.V.C.-&
PHASE
INVERTER
V-11
6V6GT
OUTPUT
R-46
470K
C-66
.015
MFD
220V
DIAL & PILOT
LAMPS
MAZDA 51
R-38
22.0 MEG
200V
R-53
6800
R-54
3000
C-78
10
MFD
C-79
40
MFD
C-80
40
MFD
T-1
S-4
RONT
YEL
330V
L-24
V-4
C-81
.01
MFD
YEL
RED
V-12
5Y3GT
RECTIFIER
RED
V-3
V-6
C-82
.01
MFD
C-83
47
MMF
V-1
RED
YEL
POWER SUPPLY
PLUG
(PIN VIEW)
SOCKET
VIEW
V-2
V-5
V-7
RED
GRN
S-5 PWR
SWITCH
ON H.F.
TONE
CONTROL
V-8
V-9
V-10
GRN
V-11

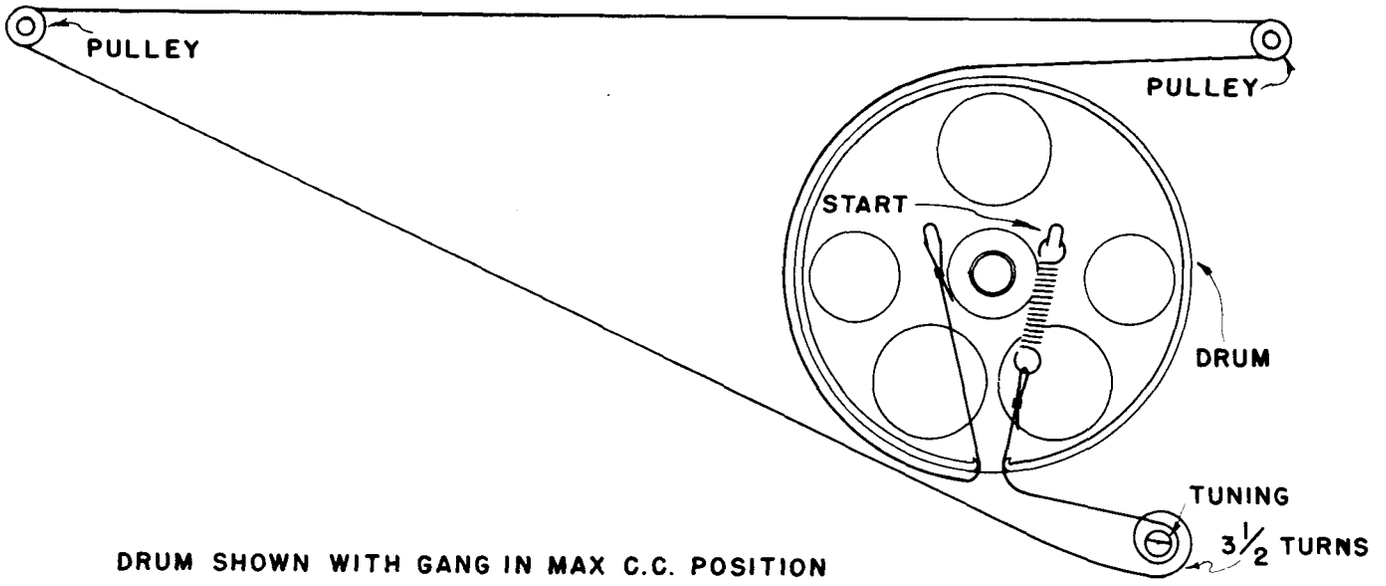

DRUM SHOWN WITH GANG IN MAX C.C. POSITION

FIG. 7 DIAL CORD STRINGING

REPLACEMENT PARTS FOR MODEL V-312

Insist on genuine factory tested parts, which are readily identified and may be purchased from authorized dealers.

STOCK NO.	DESCRIPTION
	CHASSIS ASSEMBLIES
	Capacitor-Mica Trimmer, 2 sections 2 (1.6 - 18 MMF)(C10,C14) 500 V.
S-3611	" -Ceramic Trim.3-13 MMF. (C37)
	" -Mica Trim. 2 sections
S-5093	" -2(3-35 MMF)(C24,C25) 500 V.
S-5538	" -Mica Trimmer 3 Sections 2 (10-160 MMF) (C5,C7) 3-35 MMF (C9) 500 V.
73866	" -Ceramic, 2 MMF. 500 V. (C31)
S-5539	" -Ceramic, 5 MMF. ± 1 MMF (C19)
S-5540	" - " , 8 MMF. ± .5 MMF (C14A)
S-5540	" - " , 8 MMF. ± 5% 500 V. (C11A)
39044	" - " ,15 MMF. ± 5% 500 V. (C10A)
36463	" - " ,18 MMF.+ -10% 500 V. (C34)
S-5543	" - " ,47 MMF.+ -20% 500 V. (C83)
S-5544	" -Mica 47 MMF.+ -10% (C64)
	" -Ceramic 56 MMF.500V.(C35)
73867	Capristor-56 MMF.33 ohms 1/4 W.(C26,R4)
33103	Capacitor-Ceramic,68 MMF.+ -10% 500 V. (C33)
	" - " 100 MMF.+ -20% 500 V. (C4,C17)
S-4614	Capristor-2 (105) MMF. & 47,000 ohms ½ W. (C50,C52,R16)
S-5546	Capacitor-Mica 120 MMF.+ -10% (C18)
S-5547	" - " 150 MMF.+ - 5% (C2,C13)
S-5548	" - " 220 MMF.+ - 5% (C20)
S-5549	" - " 240 MMF.+ - 5% 500V.(C12)
S-5550	" - " 270 MMF.+ - 5% (C3)
	" - " 330 MMF.+ - 5% 500 V.
	" - " 330 MMF.+ -10% 500 V.
	" - " 360 MMF.+ - 5% (C11)500V.

STOCK NO.	DESCRIPTION
	CHASSIS ASSEMBLIES-(Cont'd.)
S-5370	Capacitor-Ceramic,1,000 MMF.+ - 20% 350 V. (C68, C73)
S-5552	" -Mica,1200 MMF. ±10% (C71)
71501	" -Ceramic 1500 MMF. 350 V.(C30)
	" -Paper .0025 Mfd. ±10% 200 V. (C63)
74009	" -"Disc" 2 (.004 Mfd.) 500 V. (C42,C45)
	" -Paper .005 Mfd.+ -10% 400V. (C29)
	" -Paper .005 Mfd. ±20% 200 V. (C54,C57)
	" -Paper .005 Mfd.+ -10% 200 V. (C61,C57)
73960	" -"Disc" .01 Mfd. 500 V. (C8, C6,C32,C46,C43,C44,C81, C51,C53,C62) (C82)
	" -Paper .01 Mfd.+ -10% 400 V. (C70)
	" -Paper .01 Mfd.+ -20% 200 V. (C67) (C75,C55)
	" -Paper .01 Mfd.+ -20% 400 V. (C74)
	" -Paper .015 Mfd.+ -10% 200 V. (C65,C66)
	" -Paper .05 Mfd.+ -20% 200 V. (C72)
	" -Paper .05 Mfd.+ -20% 400 V. (C27,C77)
73747	" -Electrolytic,2 Mfd. 50V.(C60)
S-5336	" - " 10 Mfd.300V.(C78) 20 Mfd. 50V(C76) 40 Mfd.450V.(C79,C80)
S-5333	Condenser-Gang condenser (C1) (C15,C16, C22,C23,C28,C29,C36)
S-5318	Coil-S.B. Antenna Coil (L1)
S-5321	" -S.B. R.F. Coil (L7)

REPLACEMENT PARTS FOR MODEL V-312 (Cont'd)

STOCK NO.	DESCRIPTION
	CHASSIS ASSEMBLIES-(Cont'd.)
S-5324	Coil-S.B. Oscillator (L4)
S-5319	" -S.W.1 - Ant. coil (L2)
S-5322	" -S.W.1 - R.F. coil (L8)
S-5325	" -S.W.1 - Oscillator(L5)
S-5320	" -S.W.2 - Ant. coil (L3)
S-5080	" -S.W.2 - R.F. coil (L9)
S-5326	" -S.W.2 - Oscillator (L6)
S-5329	Control-Volume Control (R34)
S-5331	" -Low Frequency tone control(R42)
S-5330	" -High Frequency tone control & power switch (R40,S5)
	Resistor-68 ohms ±20% ½ W. (R10)
	" -100 " ± 5% ½ W. (R26)
	" -120 " ±10% ½ W. (R15)
	" -270 " ±10% ½ W. (R41)
	" -390 " ±10% 2 W. (R51)
	" -1200 " ± 5% ½ W. (R29)
	" -1500 " ±10% ½ W. (R44,R47)
	" -2200 " ±20% ½ W. (R3,R14,R20)
	" -3000 " ±10% 5 W. (R54)
	" -3300 " ± 5% ½ W. (R31)
	" -6800 " ±10% ½ W. (R50)
	" -6800 " ±20% ½ W. (R53)
	" -10,000 " ±10% ½ W. (R28)
	" -12,000 " ±10% ½ W. (R25)
	" -15,000 " ±10% ½ W. (R27)
	" -18,000 " ±10% ½ W. (R9)
	" -22,000 " ±10% 2 W. (R6,R35)
	" -22,000 " ±10% ½ W.
	" -22,000 " ±20% ½ W.(R4,R17)
	" -27,000 " ±10% ½ W.(R55,R11)
	" -33,000 " ±10% ½ W.(R37)
	" -33,000 " ±20% ½ W.(R12)
	" -39,000 " ± 5% ½ W.(R30)
	" -39,000 " ±10% 1 W.(R48)
	" -39,000 " ±10% ½ W.(R22)
	"-220,000 " ±10% ½ W.(R21)
	"-220,000 " ±20% ½ W.(R39)
	"-270,000 " ±10% ½ W.(R43)
	"-390,000 " ±10% ½ W.(R24)
	"-470,000 " ±10% ½ W.(R18,R23,R49)
	"-470,000 " ±20% ½ W.(R32,R46,R52)
	"-1 Megohm + -20% ½ W. (R1,R2,R5,R13)
	"-3.3 Meg. + -20% ½ W. (R19)
	"-3.3 " ±10% ½ W. (R36)
	"-3.9 " ±10% ½ W. (R8)

STOCK NO.	DESCRIPTION
	CHASSIS ASSEMBLIES-(Cont'd.)
	Resistor-10.0 Meg. ±20% ½ W.(R33,R45)
	" -22.0 " ±20% ½ W.(R38)
*S-5903	Switch-Range Switch (S1,S2,S3,S4)
S-5327	Transformer-1st I.F. trans. (L13,L14, L15,L16)
S-5328	" -2nd I.F. trans. (L17,L18, L19,L20)
S-5332	" -Output trans. (T2)
S-4379	" -Power trans.(60 cy.)(T1)
S-4381	" -Power " (25 cy.)(T1)
S-5554	" -Ratio Det. trans. & driver (L21,L22)
	SPEAKER ASSEMBLY
S-4288	Speaker (12")
S-4299	Cone & voice coil assy.
	MISCELLANEOUS ASSEMBLIES
S-5530	Bezel
S-4313	Cord-Dial Cord (Std.)
*S-5902	Dial-Dial Scale
S-3870	Knob-(Walnut) all knobs except for range switch
S-5075	Knob-(Walnut) range switch knob
S-5531	Knob-(Mahogany) All knobs except for range switch
S-5532	Knob-(Mahogany) range switch knob
S-5316	Loop-Loop antenna assy.
S-5335	Pointer-Station selector
*S-5990	Handle-Record drawer handle
*S-5991	Door Pulls - ALBUM DRAWER PULLS
*S-5901	Cabinet Back Cover
S-5344	Phono Socket
	AUTOMATIC RECORD CHANGER
	Refer to: RP-168 (Second Issue) & RP-201 Service Notes for replacement parts and Service Data.
	*Indicates new Stock Items.

Only items listed under Stock Numbers are available as Replacement Parts.

All parts subject to change or withdrawal without notice.

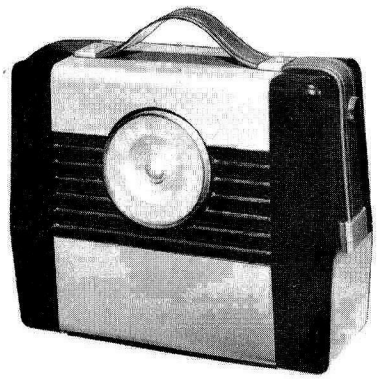

MODEL BP400

RCA VICTOR

"HIS MASTER'S VOICE"

MODEL BP400

SERVICE DATA

— 1949 NO. 6 —

GENERAL SERVICE DIVISION
RCA VICTOR COMPANY LIMITED
MONTREAL, QUE.

Electrical and Mechanical Specifications

Frequency Range		540-1600 KC
Intermediate Frequency		455 KC
Power Supply Rating	Current	Voltage
"A" battery	60 ma	7.5 V.
"B" battery	10 ma	75 V.

Batteries Required:
1 Eveready Battery Pack W167. (Average life of Eveready W167 Battery 100 hrs. intermittent service).

Tube Complement:
(1) RCA 1R5 ---------- Converter
(2) RCA 1U4 ---------- I.F. Amplifier
(3) RCA 1U5 ---------- 2nd Det. A.V.C.-AF Amp.
(4) RCA 3V4 ---------- Power Output

Power Output
Undistorted ---------- 15 watts
Maximum ---------- 25 watts
Loudspeaker ---------- 4 in. P.M. 3.4 ohms at 400 cycles

Cabinet Dimensions
Height---9 in. Width---11¼ in. Depth---5 in.

General Description

The RCA Victor Model BP400 is a portable five tube single band battery operated receiver, housed in an attractive two tone plastic cabinet.

Features of the design include a built-in loop antenna; powdered iron core I.F. transformers and oscillator coil; automatic volume control and a 4 inch round P.M. loudspeaker.

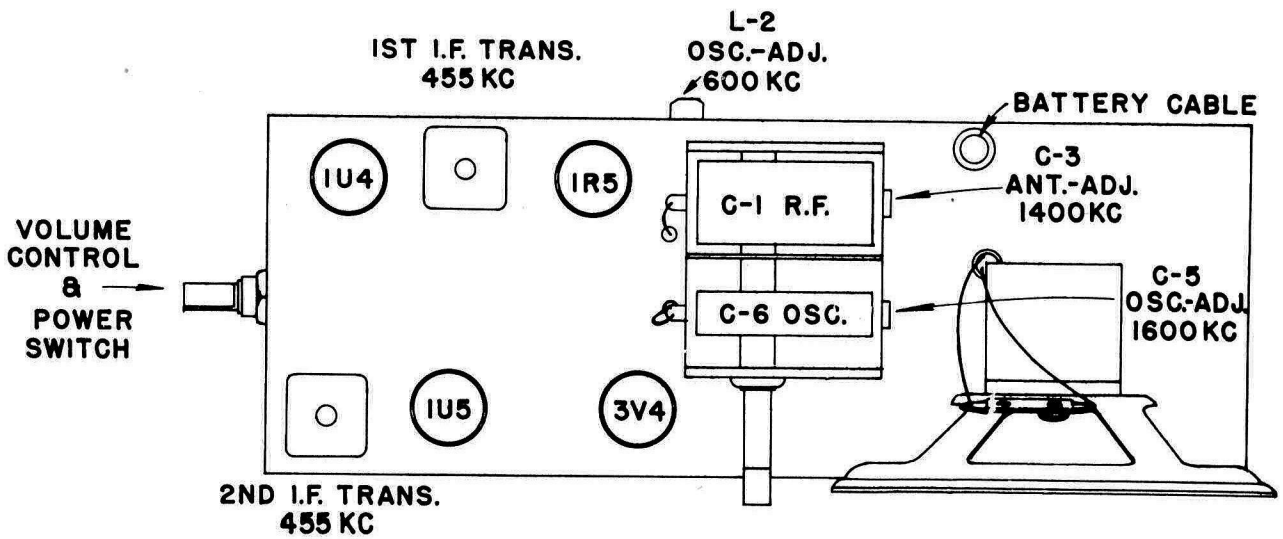

Fig. 1—Chassis Layout and Alignment Adjustment

(For Alignment Information refer to RCA Victor Model BP5 Service Note)

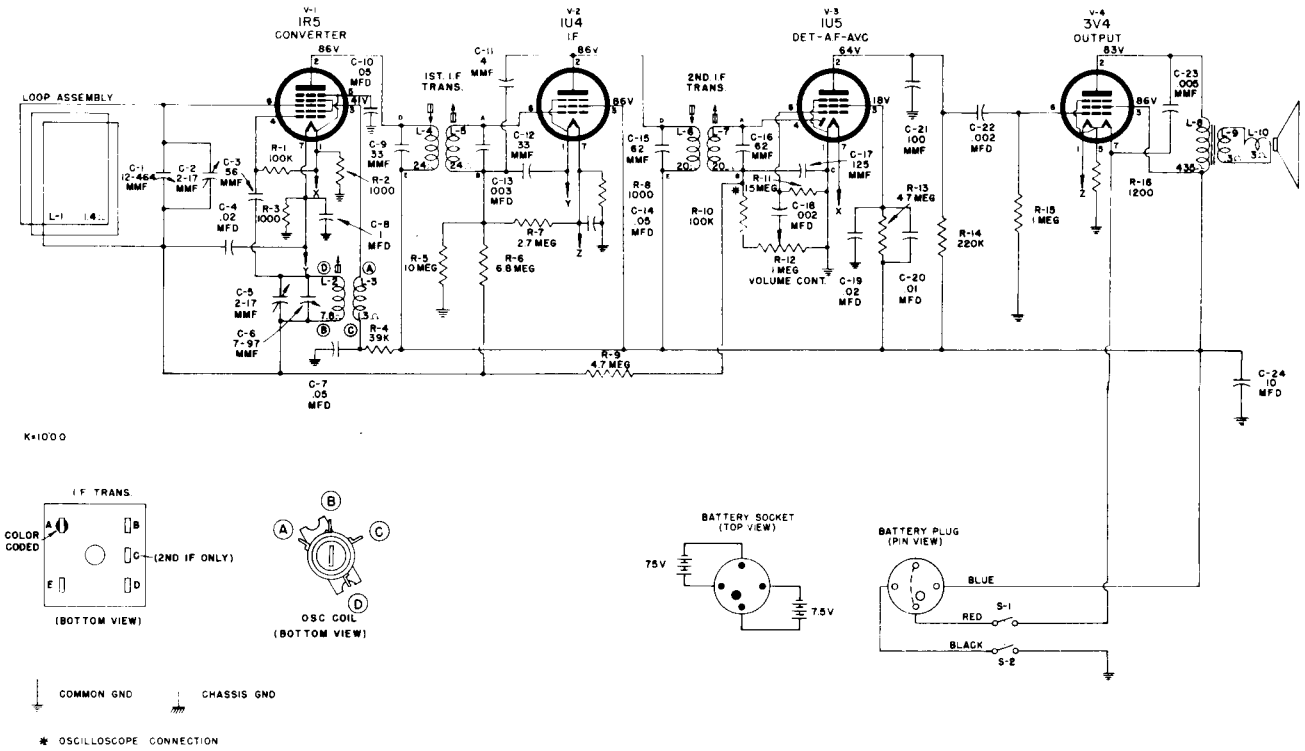

Fig. 2—Schematic Diagram

REPLACEMENT PARTS FOR MODEL BP400

Insist on genuine factory tested parts,which are readily identified and may be purchased from authorized dealers

Stock No.	Description	List Price
	CHASSIS ASSEMBLY	
73153	Capacitor - ceramic 4 MMF 10% 500 V. (C11)	
71924	" - " 56 " 10% 500 V. (C3)	
S-4674	" - " 100 " 20% 500 V. (C21)	
S-4675	" - Midget paper .003 Mfd. 200 V. 5% (C13)	
	" - .002 Mfd. paper (C-22, C18)	
	" - .005 Mfd. 1200 V. paper 10% (23)	
	" - .01 Mfd. 800 V. paper 10% (20)	
	" - .02 Mfd. 700 V. paper 10% (C4-C19-C24)	
	" - .05 Mfd. 400 V. paper 25% (C7-C10-C14-C25)	
	" - .1 Mfd. 400 V. paper 25%(C8)	
38593	" - Electrolytic (24)	
S-4334	Coil - Oscillator coil with core & stud (L2-L3)	
73126	Condenser - Variable (C1-C2-C5-C6)	
73141	Loop - antenna loop (L1)	
	Resistor 1,000 ohms ½ watt 10% (R2-R3-R8)	
	" 1,200 " " " 10% (R16)	
	" 39,000 " " " 10% (R4)	
	" 100,000 " " " 20% (R1-R10)	
	" 220,000 " " " 20% (R14)	
	" 1 Megohm" " 20% (R15)	
	" 2.7 " " " 10% (R7)	
	" 4.7 " " " 10% (R9-R13)	
	" 6.8 " " " 10% (R6)	
	" 10. " " " 10% (R5)	
	" 15 " " " 10% (R11)	
S-4860	Socket - tube socket (with shield)	
73117	" - " " (less shield)	
73129	Transformer - 1st I.F. (L4-L5-C9-C12)	
73130	" - 2nd I.F. (L6-L7-C15-C16-C17)	
73125	Volume Control & Switch (R12-S1-S2)	

Stock No.	Description	List Price
	SPEAKER ASSEMBLIES	
S-3556	Dust Cap (Pkg. 3)	
S-4330	Cone - cone & voice coil assy (L10)	
S-5011	Output Transformer (L8-L9)	
	MISCELLANEOUS ASSEMBLIES	
S-5102	Back - cabinet back (less hinges)	
73147	Ball - for back cover latch (Pkg. 2)	
73136	Button - centre button for dial knob	
73142	" - station selector indicator button (Pkg. 2)	
S-5101	Cabinet - front	
S-5026	Clip - spring clip for vol. control (Pkg. 2) and power switch knob	
73148	Catch - spring catch for back (L.H.)	
73146	" - " " " " (R.H.)	
S-5103	Handle - carrying handle	
73144	Hinge - cabinet hinge	
73135	Knob - dial knob complete	
73138	" - volume control & power switch	
73275	Plug - battery cable plug	
73139	Shield - slip shield for carrying strap	
30900	Spring - retaining spring for dial knob (Pkg. 5)	
70425	Spring - retaining "O" spring for dial knob	
73483	Support - flexible drop support for back cover	

All prices and parts are subject to change or withdrawal without notice.

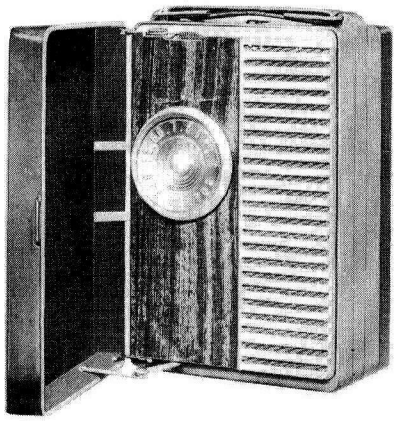

RCA VICTOR

"HIS MASTER'S VOICE"

BATTERY PERSONAL RECEIVER

MODEL BP-401

SERVICE DATA

1949 No. 3

GENERAL SERVICE DIVISION
RCA VICTOR COMPANY LIMITED
MONTREAL, QUE.

Electrical and Mechanical Specifications

Tuning Range ..... 540-1600 kc
Intermediate Frequency ..... 455 kc

Tube Complement

1. RCA 1R5 ..... Converter
2. RCA 1U4 ..... I.F. Amplifier
3. RCA 1U5 ..... 2nd Det.-A.F. Amp.-A.V.C.
4. RCA 3S4 ..... Output

Loudspeaker

Size and type ..... 2" x 3" P.M.
Voice coil impedance ..... 11¾ ohms at 1000 cycles

Batteries Required:

Type of Battery	Current Consumption	Approx. Life (Intermittent Service)
"A"—1.5 volts Eveready 950	0.25 amp.	7 to 10 hrs.
"B"—67.5 volts Eveready 467	8.5 ma.	40 to 60 hrs.

Power Output:

Undistorted ..... 0.05 watt
Maximum ..... 0.10 watt
Dimensions (overall) .....6¼" x 4⅜" x 3⅜"
Weight (with batteries) ..... 3½ lbs.

REPLACEMENT PARTS FOR MODEL BP-401

Insist on genuine factory tested parts, which are readily identified and may be purchased from authorized dealers.

Stock No.	Description	List Price
	CHASSIS ASSEMBLY	
70445	Board - terminal board (1 contact)	
70444	" - " " (5 contact)	
73153	Capacitor - ceramic 4 MMF. (C8)	
73962	" - " 33 " (C11)	
73901	" - " 51 " (C2)	
73963	" - " 75 " (C14)	
39634	" - " 180 " (C16)	
74093	" - " 1500 " (C20)	
73960	" - " .01 Mfd. (C5)	
72815	" - .002 Mfd. (C15)	
73961	" - .003 " (C9)	
70606	" - .005 " (C18)	
71928	" - .02 " (C17)	
70615	" - .05 " (C10)	
73964	" - Electrolytic (10 Mfd.) (C19)	
73947	Condenser - Variable (C1-C3-C4)	
70443	Coil - Oscillator coil (L1-L2)	
73955	Loop - Antenna loop complete with connectors (Less lid)(brown)	
73956	Loop - Antenna loop complete with connectors (less lid)(red)	
14076	Resistor 820 ohms ¼ watt (R11)	
36714	" 15,000 " " " (R2)	
14138	" 68,000 " " " (R5)	
3252	" 100,000 " " " (R1)	
30652	" 1 Megohm " " (R9)	
12928	" 3.3 " " " (R4-R10)	
30931	" 4.7 " " " (R3-R7)	
30992	" 10 " " " (R8)	
70436	Socket - tube socket (shielded)	
73945	Switch - power switch (S1)	
70442	Transformer - 1st I.F. (T1-C6-C7)	
70437	" - 2nd I.F. (T2-C12-C13)	
73948	Volume control (R6)	
	SPEAKER ASSEMBLY (2 x 3)	
S-5016	Speaker	
S-3562	Output transformer (T3)	

Stock No.	Description	List Price
	MISCELLANEOUS ASSEMBLIES	
73967	Bottom - case bottom (red)	
73966	" - " " (brown)	
73937	Baffle - speaker baffle & grille cloth	
70457	Catch - spring catch assembly	
74016	Center - case center complete	
70425	Clip - spring clip for tuning knob	
70452	Connector - loop connectors & eyelets (1 set)	
73958	Fastener - push fastener to hold loop (Brown)	
73959	Fastener - push fastener to hold loop (Red)(Pkg. 2)	
73950	Hinge - lid hinge L.H. (less mtg. studs)	
73951	Hinge - lid hinge R.H. (less mtg. studs.)	
73969	Handle - carrying handle (Red)	
74022	Handle - " " (Brown)	
72229	Holder - "A" battery holder assy.	
73936	Knob - tuning knob	
73946	" - volume control knob	
73970	Link - Handle link (Pkg. 2)	
70708	Lead - "B" battery lead complete	
73925	Lid - case top lid complete with lid support & hinges (less loop)(brown)	
73926	Lid - case top lid complete with lid support & hinges (less loop)(red)	
73949	Nameplate - "RCA" for lid	
73938	Panel - chrome & mahogany panel	
73944	Screw - #2-56 x 3/16" to hold lid hinges to face panel (Pkg. 2)	
73943	Screw - #4-40 x 3/16" to fasten face panel to chassis (Pkg. 3)	
70446	Screw - #6 x ¼ self tapping, to mount battery holder (Pkg. 3)	
73942	Stud - Lid support stud (face panel end)(Pkg. 2)	
73952	Stud - L.H. lid hinge mounting stud (Pkg. 10)	
73953	Stud - R.H. lid hinge mounting stud (Pkg. 10)	
70451	Support - lid support complete	

All parts subject to change or withdrawal without notice.

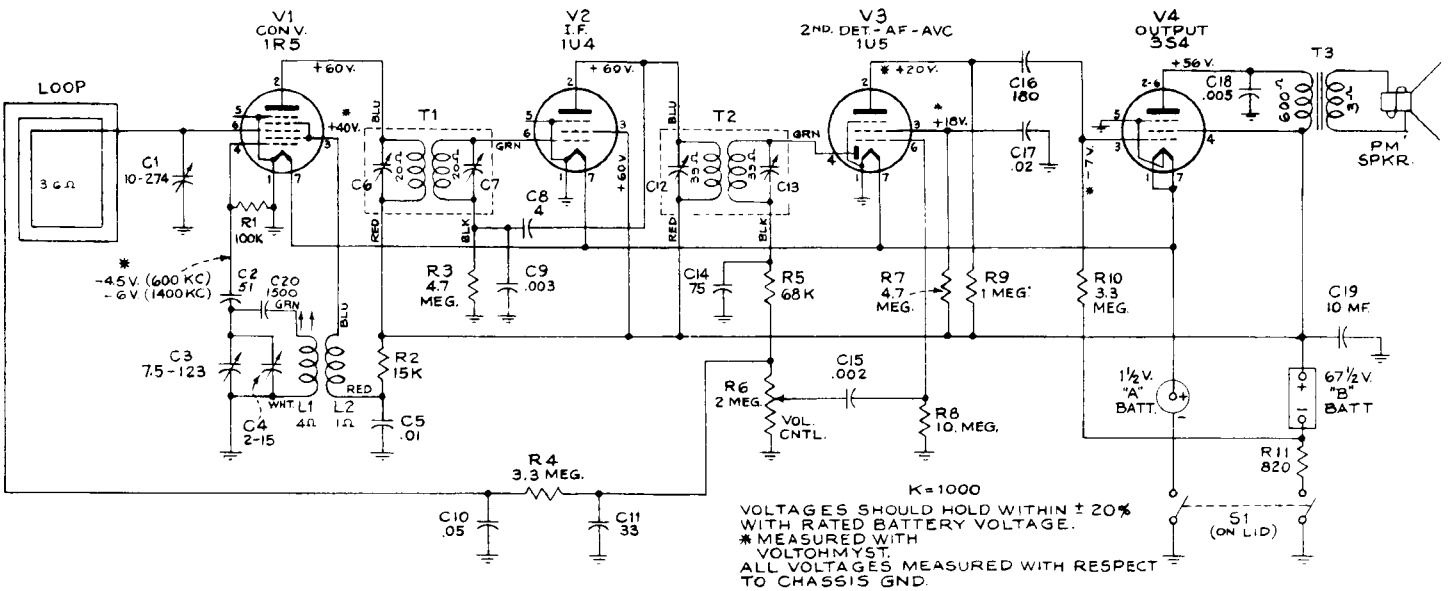

Fig. 1—Schematic Diagram

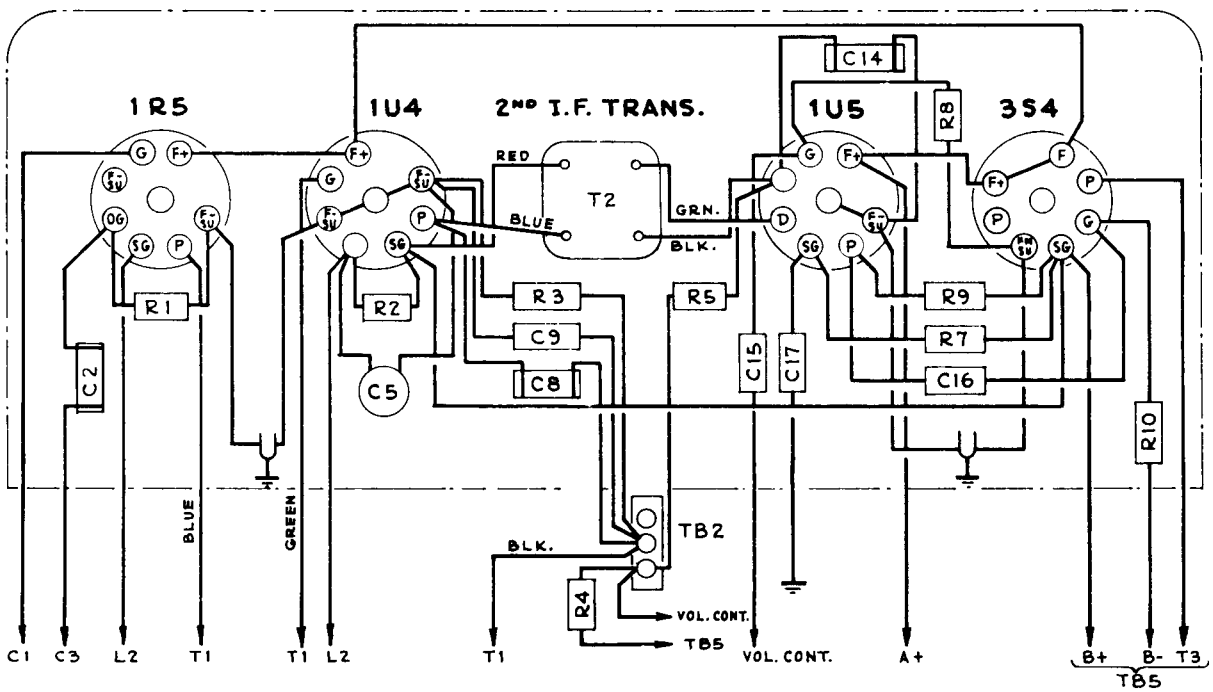

Fig. 2—Tube Shelf Wiring Diagram

Alignment Procedure

Output Meter.—Connect meter from top lug of TB5 (plate of 3S4) to ground. Turn volume control to maximum position.

Test-Oscillator.—For all alignment operations, connect the low side of the test-oscillator to the receiver chassis, and keep the oscillator output as low as possible to avoid a-v-c action.

Alignment Shield.—It is necessary to use a shield during oscillator alignment.

Fig. 3 shows the modifications necessary to convert the center strip portion of a case into a convenient shield to be used as a substitute for the regular case center strip during oscillator alignment.

If a substitute case is not available, a shield may be improvised using a sheet of aluminum (DO NOT USE STEEL) to approximate the shielding effect of the case on the 1R5 tube, tuning condenser and oscillator coil.

Critical Lead Dress

1. Dress blue, green, and black leads of second I.F. transformer as direct as possible. If excess lead exists, dress down side of socket and flat against chassis to transformer opening.
2. Dress audio screen bypass capacitor (C17), underneath the chassis.
3. Dress audio coupling capacitor (C15), and volume control lead, up and underneath the shelf supporting the output transformer.
4. Wire in the three capacitors pyramided behind the speaker with enough space at the end of the battery holder to allow holder to move when battery is replaced. Dress the ground leads of these capacitors to keep from shorting "+A" to chassis ground.
5. Observe the outside foil connections on all paper capacitors, also the polarity of the electrolytic capacitor, C19.
6. Keep blue and red leads of output transformer above the mounting shelf.
7. Dress leads to gang as far as possible from all metal parts.
8. Dress neutralization bypass capacitor, C9, as near metal chassis as possible.
9. Dress bypass C5 over bottom end of V2 (1U4), tube socket.
10. Dress neutralization capacitor, C8, as near metal chassis as possible.

Alignment Chart

Order Of Alignment		TEST OSCILLATOR: Connect "HI" Side To	Connect "LO" Side To	Dummy Antenna	Frequency Setting	Receiver Dial Setting	Circuit To Adjust	Adjustment Symbol	Notes
I.F. Alignment	1	Connection lug of C1 located on rear of gang in series with .01 mfd.							
	2	See step 1	Gnd.	.01	455 KC	1600 KC	I.F. Trans.	C-12, C-13	Max. Output
	3	Same	Same	Same	Same	Same	I.F. Trans.	C-6, C-7	Same
	4	Repeat steps 2 and 3.							
R.F. Alignment	5	Antenna coupling loop.*			1400 KC	1400 KC (Rock gang)	Osc. †	C-4	Max. Output
	6	Same			600 KC	600 KC (Rock gang)	Osc. †	L-1	Max. Output
	7	Repeat steps 5 and 6.							

* Steps 5 and 6 require a coupling loop from the signal generator to feed a signal into the receiver loop located in the lid. This loop should be loosely coupled to the receiver loop antenna so as not to disturb the receiver loop inductance.

† ALIGNMENT SHIELD MUST BE USED. (See text.)

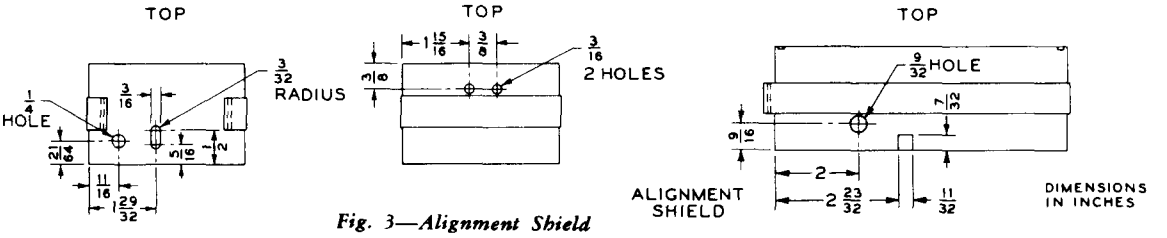

Fig. 3—Alignment Shield

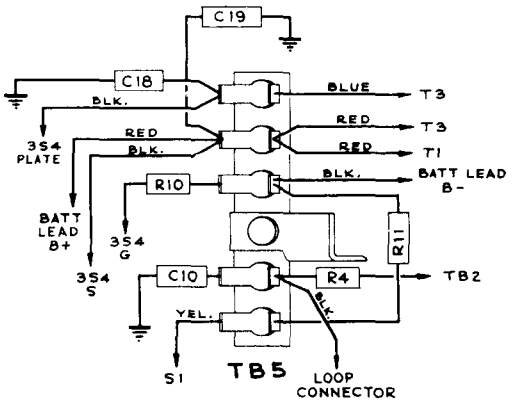

Fig. 4—Terminal Board Wiring

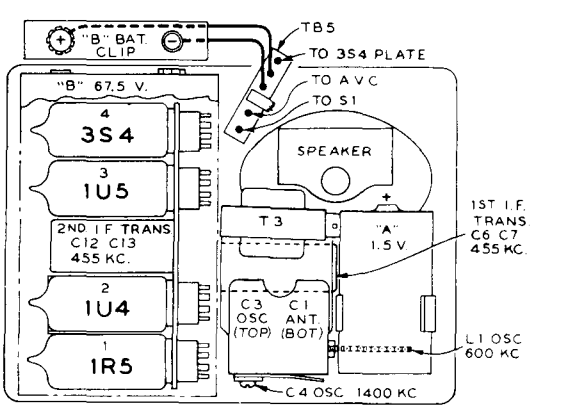

A rubber band should be placed around each tube for cushioning.

Fig. 5—Tube and Trimmer Locations

Replacement of Component Parts

I. **To remove bottom cover:**
   a. Depress locking spring clip through hole in top of case.
   b. With spring clip depressed, pull cover carefully out and up off the retaining lugs in the bottom of the case center strip.

II. **To replace batteries:**
   a. Remove bottom cover.
   b. Remove, either or both, the "A" and "B" battery as may be necessary. The "B" battery snap fasteners can best be removed by inserting a screwdriver under the snap fastener strip and prying upward.

III. **To remove the case center strip:**
   a. Remove bottom cover.
   b. Remove one screw (A) on the inside at the handle end.
   c. Tilt case center strip and lift.

IV. **To replace tubes:**
   a. Remove bottom cover.
   b. Remove "B" battery.
   c. Remove case center strip.
   d. Remove and replace tubes as required.

V. **To remove face panel from chassis plate:**
   a. Remove dial knob (pull off).
   b. Remove bottom cover (I), batteries (II) and case center strip (III).
   c. Unsolder leads to loop connectors.
   d. Remove the four Phillips head screws (B) located at three corners and end close to 2nd I.F. transformer, which hold the chassis to face panel.
   e. The face panel may now be folded back into the case top lid.

VI. **To remove speaker:**
   a. Remove face panel (see item V).
   b. Unsolder voice coil leads.
   c. Remove two Phillips head screws (C) on chassis plate holding speaker.

VII. **To remove output transformer:**
   a. Remove speaker (see item VI).
   b. Unsolder transformer leads.
   c. Remove rivet (use bolt for replacement).
   d. Unsolder mounting lug.

VIII. **To remove chassis subassemblies from chassis plate:**
   a. Remove tubes (see item IV).
   b. Unsolder grounding strap (E) which connects tube shelf to chassis plate.
   c. Unsolder two wires which connect to speaker.
   d. Unsolder two wires attached to switch.
   e. Unsolder leads to loop connectors.
   f. Remove dial knob (pull off).
   g. Remove two screws (F) holding tube shelf to chassis plate.
   h. Remove nut (G) between I.F. transformers.
   i. Remove screw (G) beneath the negative terminal of "A" battery holder, and also screw (G) adjacent to volume control below "A" battery holder.

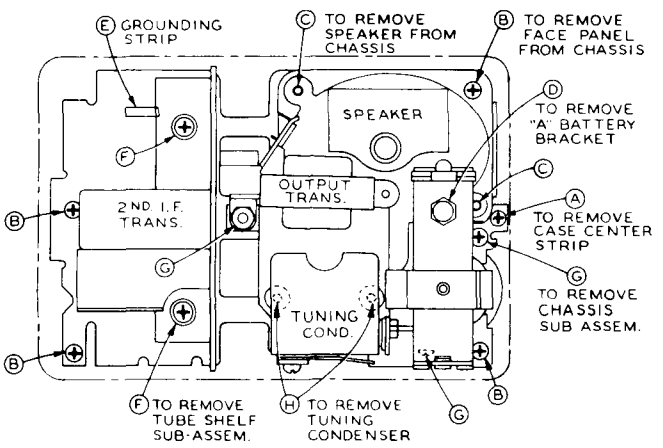

Fig. 6—Chassis Disassembly

IX. **To remove volume control:**
   a. Remove chassis subassembly from chassis plate (see item VIII).
   b. Unsolder the two leads to the "A" battery holder.
   c. Lift up the "A" battery holder by removing the one screw (C) in its base. This holder has a hinge action and must be lifted up and back to remove.
   d. Unsolder volume control leads.
   e. Remove volume control knob (attached to shaft with set screw)
   f. Remove volume control assembly by bending back four lugs.

X. **To remove oscillator coil:**
   a. Same procedure and steps as covered in item VIII for removal of chassis subassembly plus the following.
   b. Unsolder oscillator coil leads.
   c. Remove coil by unsnapping spring mounting clips from angle bracket.

XI. **To remove tuning condenser:**
   a. Remove case center strip (III).
   b. Unsolder two leads and two ceramic capacitors (C2, C20) from tuning condenser.
   c. Remove tuning knob (pull off).
   d. Remove the two screws (H) (accessible through dial knob opening) which hold the tuning condenser to the chassis subassembly.

XII. **To remove 1st I-F transformer:**
   a. Remove chassis subassemblies (see item VIII).
   b. Unsolder four leads from 1st I-F transformer.
      1. Blue to screen of 1R5 tube.
      2. Green to grid of 1U4 tube.
      3. Red to B+ terminal of 5 lug terminal board TB5.
      4. Black to terminal board TB2.
   c. Unsolder and bend mounting lugs straight on the I-F transformer can.

XIII. **To remove 2nd I-F transformer:**
   a. Remove chassis subassemblies (see item VIII).
   b. Unsolder four leads from 2nd I-F transformer.
   c. Unsolder and bend mounting lugs straight on the I-F transformer can.

XIV. **To remove loop assembly:**
   a. Remove case center strip (see item III).
   b. Unsolder leads to loop connectors.
   c. Remove snap fasteners holding loop in cover.
   d. Carefully pry out on edge next to catch (opposite hinges).
   e. When reassembling press loop assembly into top lid on the side next to the connectors to cause the plastic projections on the loop assembly to engage in the detents in the top lid.

XV. **To remove switch:**
   a. Remove case center strip (III).
   b. Remove screw (I) which holds switch to chassis plate.
   c. Unsolder the two wires which connect to the switch.
   d. Unsolder switch from chassis plate.

XVI. **To adjust latching of top lid:**
   a. The hinges are attached to the face panel with Phillips head screws (one to each hinge). The mounting holes of the hinges are sufficiently large to permit adjustment of the hinges when the mounting screws are loosened. Tighten screws after adjustment.

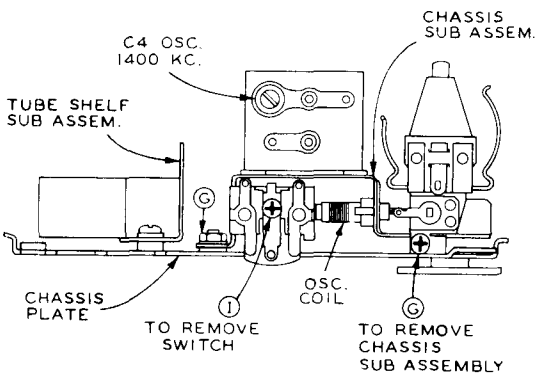

Fig. 7—Chassis Disassembly



MODEL BP 402

RCA VICTOR

"HIS MASTER'S VOICE"

BATTERY OPERATED PERSONNEL RECEIVER

MODEL BP402

SERVICE DATA

— 1950 No. 22 —

GENERAL SERVICE DIVISION
RCA VICTOR COMPANY LIMITED
MONTREAL, QUE.

Electrical and Mechanical Specifications

Tuning Range ---------- 540-1600 kc
Intermediate Frequency ---------- 455 kc

Tube complement:
1. RCA 1R5 ---------- Converter
2. RCA 1U4 ---------- I.F. Amplifier
3. RCA 1U5 ---------- 2nd Det.-A.F. Amp.-A.V.C.
4. RCA 3V4 ---------- Output

Loudspeaker
Size and type ---------- 2" x 3" P.M.
Voice coil impedance ---------- 11¾ ohms at 1000 cycles

Batteries Required: Type of Battery	Current Consumption	Approx. Life (Intermittent Service)
"A"—1.5 volt Eveready No. 950	0.25 amp.	7 to 10 hrs.
"B"—67.5 volts Eveready No. 467	8.45 ma.	40 to 60 hrs.

Power Output:
Undistorted ---------- .075 watt
Maximum ---------- 0.10 watt

Dimensions (over-all) ---------- 5½" x 7⅝" x 2⅛"
Weight (with batteries) ---------- slightly under 3 lbs.

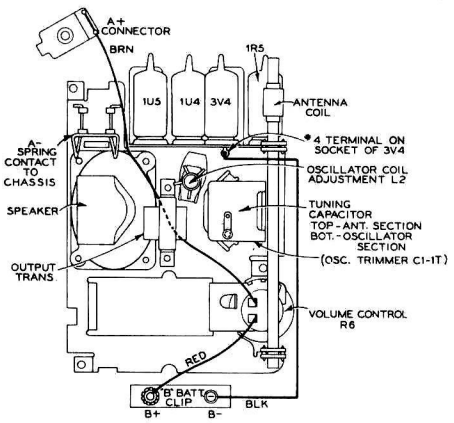

Fig. 1—Tube Trimmer location

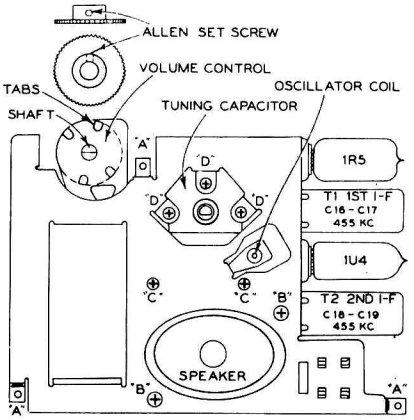

Fig. 2—Chassis assembly

REPLACEMENT PARTS FOR MODEL BP402

STOCK NO.	DESCRIPTION
	CHASSIS ASSEMBLIES
*75783	Capacitor-Gang cond. (C1-1,C1-2)
73153	" -Cer. 4 MMF (C-5)
*75784	" -56 MMF (C-2,C-7)
*75785	" -82 MMF (C-9,C-10)
	" -Paper .001 Mfd. 200 V. (C-12)
	" -Paper .002 Mfd. 200 V.(C-11,C14)
	" -Paper .003 Mfd. 200 V. (C-6)
	" -Cer. .01 Mfd. (C-4)
	" -Paper .02 Mfd. 200 V. (C-13)
	" -Paper .05 Mfd. 400 V. (C-8)
*73964	" -Electrolytic 10 Mfd.70V.(C-15)
*S-5949	Coil-Osc. coil (L-2,L-3)
*75773	Control-Vol.Cont.& power switch(R-6,S-1)
	Resistors 390 ohms +-10% ½ W. (R-11)
	" 1,000 ohms +-20% ½ W. (R-12)
	" 15,000 ohms +-10% ½ W. (R-2)
	" 47,000 ohms +-20% ½ W. (R-5)
	" 100,000 ohms +-20% ½ W. (R-1)
	" 1 megohm +-20% ½ W. (R-9)
	" 3.3 Meg. +-20% ½ W. (R4,R10)
	" 4.7 Meg. +-20% ½ W. (R3,R7)
	" 10 Meg. +-20% ½ W. (R-8)
*75775	Transformer-1st I.F. (T1)

STOCK NO.	DESCRIPTION
	CHASSIS ASSEMBLIES - Cont'd.
*75776	Transformer-2nd I.F. (T-2)
*S-5950	" -Output (T-3)
	SPEAKER ASSEMBLY
S-5948	Speaker
	MISCELLANEOUS ASSEMBLIES
*75778	Antenna-Ferrite rod antenna (L1)
*75787	Back-Case back
S-5947	Case front assy (complete)
*S-5951	Case front only
*75781	Clip-battery mounting clip
*75782	Contact-Battery contact
*75651	Emblem - "RCA Victor" emblem
*75648	Grille - Metal grille
*75649	Handle - Carrying handle
*75788	Knob - Tuning dial knog less spring
*75779	Knob - Volume control knob
*75650	Link - Carrying handle link
*74734	Spring - Spring clip for dial knobs
*S-5952	Trim - R.H.
*S-5953	" - L.H.
	* Indicates new Stock Items.

Only items listed under Stock Numbers are available as Replacement Parts.
All parts subject to change or withdrawal without notice.

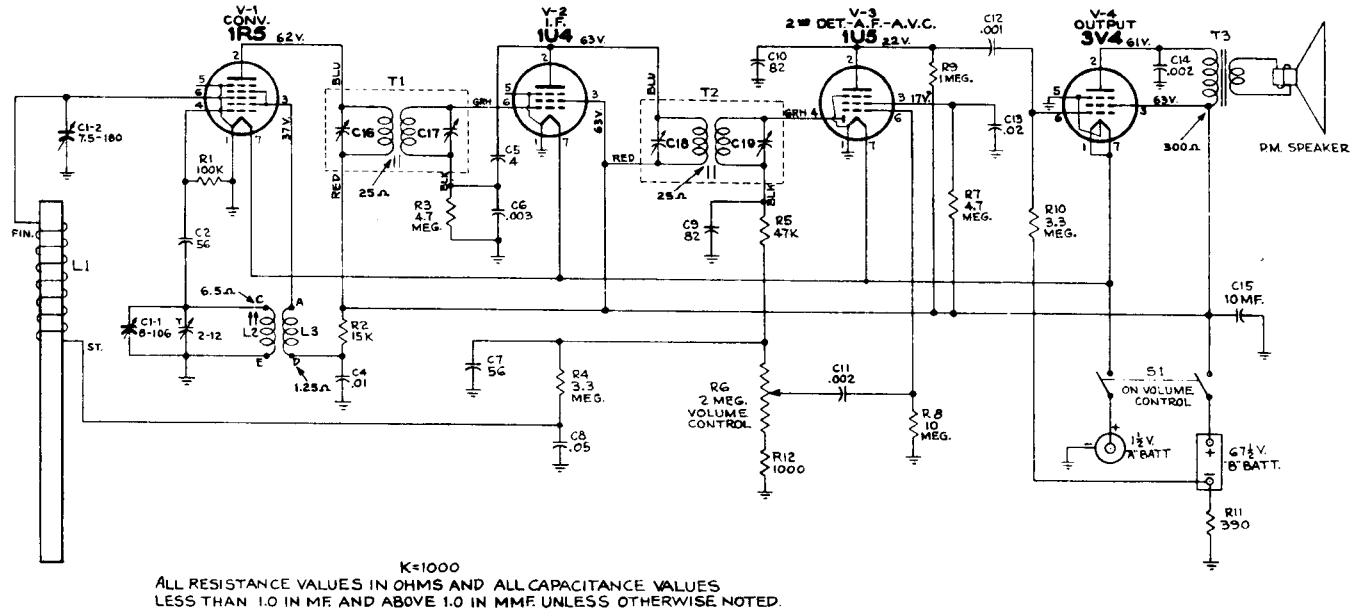

Fig. 3—Schematic Diagram

Alignment Procedure

Output Meter.—Connect meter from No. 2 terminal of V4 (plate of 3V4) to ground. Turn volume control to maximum position.

Test-Oscillator.—For all alignment operations, connect the low side of the test oscillator to the receiver chassis, and keep the oscillator output as low as possible to avoid a-v-c action.

Note:—The inductance of the antenna coil is adjusted by sliding the coil along the Ferrite rod. This ant. coil is supplied pre-adjusted and cemented to rod. This makes further adjustment unnecessary. However when replacing ant. assembly make certain that the coil end of the rod extends two inches beyond the tube shelf.

Critical Lead Dress

1. Dress all I-F transformer leads down to base and push any excess lead back in can.
2. Black lead from 1st I-F should lay down against top of tube shelf with capacitor C6 over it.
3. Dress neutralizing capacitor C5 direct and above chassis base, avoid lead length.
4. Dress blue lead from volume control and green lead from terminal board near volume control down to base and under gang frame diagonally to termination.
5. Dress blue lead from output transformer under clamp on back of gang condenser and direct to terminal 2 of V4.
6. Adjust Ferrite antenna so that coil end of rod extends two inches beyond tube shelf.
7. Dress all bare wires, pigtail leads and non-insulated components to prevent shorts.

Alignment Chart

ORDER OF ALIGNMENT		TEST OSCILLATOR				RECEIVER				
		CONNECT 'HI' SIDE TO	CONNECT 'LO' SIDE TO	DUMMY ANTENNA	FREQUENCY SETTING	RANGE SELECTOR	DIAL SETTING	CIRCUIT TO ADJUST	ADJUSTMENT SYMBOLS	NOTES
I.F. Alignment	1	C1-2 Lug	Gnd	.01 mfd.	455 K.C.		Hi End	2nd I.F. Trans.	C-18, C-19	Max. Output
	2	Same	Same	Same	Same		Same	1st I.F. Trans.	C-16, C-17	" "
	3	Repeat steps 1 & 2								
R.F. Alignment	4	*Ant. Coupling Loop (Chassis in case)	Gnd		1400 K.C.		14 Rock Gang	Osc.	C-1 - 1T	Max. Output
	5	Same	Gnd		600 K.C.		60 Rock Gang	Osc.	L-2	" "
	6	Repeat steps 4 & 5								

*Steps 4 and 5 require a coupling loop from the signal generator to feed a signal into the receiver ant. coil. This loop should be loosely coupled to the receiver ant. coil so as not to disturb the receiver ant. coil inductance.

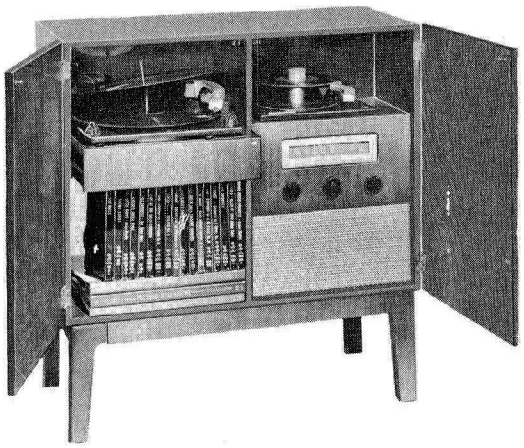

MODEL V-405

RCA VICTOR

"HIS MASTER'S VOICE"

RADIO-PHONOGRAPH COMBINATION

MODEL V405 SERVICE DATA

—1951 No. 8—

GENERAL SERVICE DIVISION
RCA VICTOR COMPANY, LTD.
MONTREAL, QUE.

Electrical and Mechanical Specifications

TUNING RANGE

Standard Broadcast ---------- 540-1600 KC
Intermediate Frequency ---------- 455 KC

TUBE COMPLEMENT

(1) Type 12BE6 ---------- Converter
(2) Type 12SF7 ---------- I.F. Amplifier, Det. & A.V.C.
(3) Type 12SC7 ---------- Audio Phase Inverter
(4) Type 35C5 ---------- Output
(5) Type 35C5 ---------- Output
Rectifier ---------- A selenium rectifier is used
Dial lamps (2) ---------- Mazda 47
Tuning Drive Ratio ---------- 11:1 (5½ turns of knob)

POWER SUPPLY RATING

Rating A---- 105-125 Volts, 25 cycles, .40 amps. 46 watts
Rating B---- 105-125 Volts, 60 cycles, .40 amps. 46 watts

LOUDSPEAKER

Size and type ---------- 6x9 in. P.M.
Voice coil impedance ---------- 3.4 ohms at 400 cycles

POWER OUTPUT

Undistorted ---------- 2.5 watts
Maximum ---------- 3.5 watts

RECORD CHANGER (RP-168C)

Turntable speed ---------- 45 r.p.m.
Record capacity ---------- eight 7 in.
Pickup ---------- Crystal (Medium output)

RECORD CHANGER (RP200)

Turntable speed ---------- 33-78 r.p.m.
Record capacity ---------- ten twelve or twelve ten
Pickup ---------- Crystal (Medium Output)

CABINET DIMENSIONS

Height ---------- 30½ inches
Width ---------- 30 inches
Depth ---------- 15½ inches

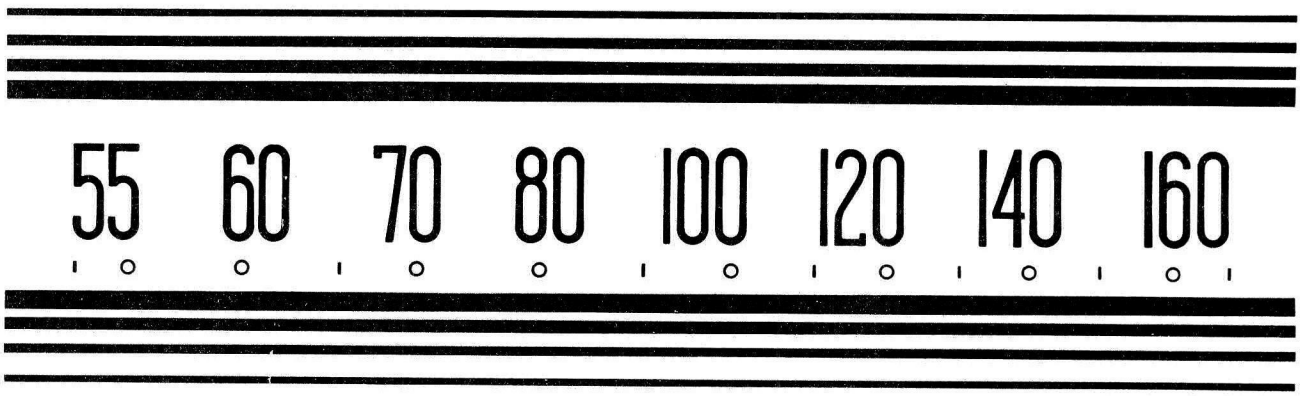

The Dial Scale drawing shown is a full size reproduction. It can be used as a reference in alignment procedure.

Fig. 1—Dial Scale

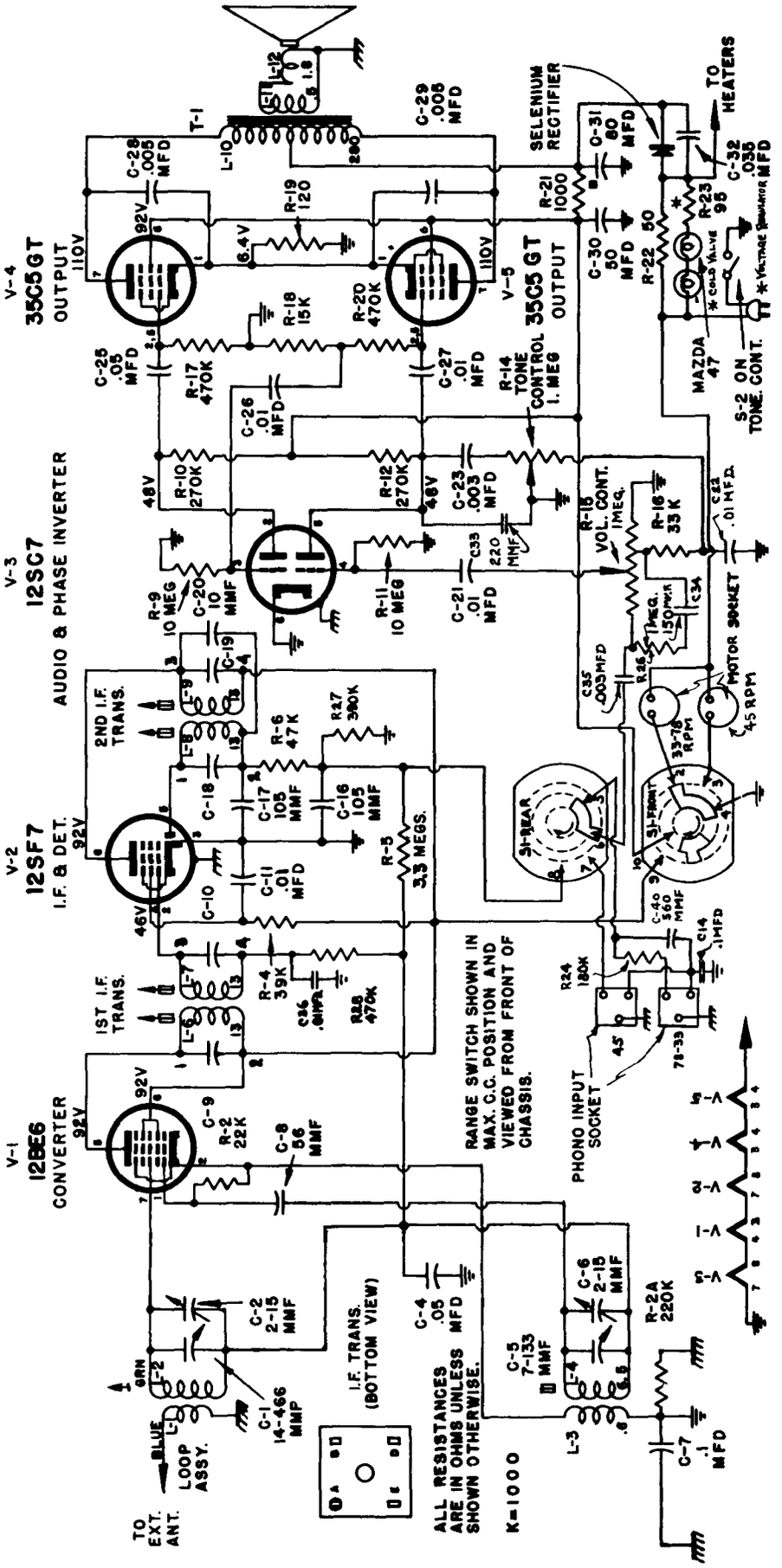

FIG. 2 — SCHEMATIC DIAGRAM

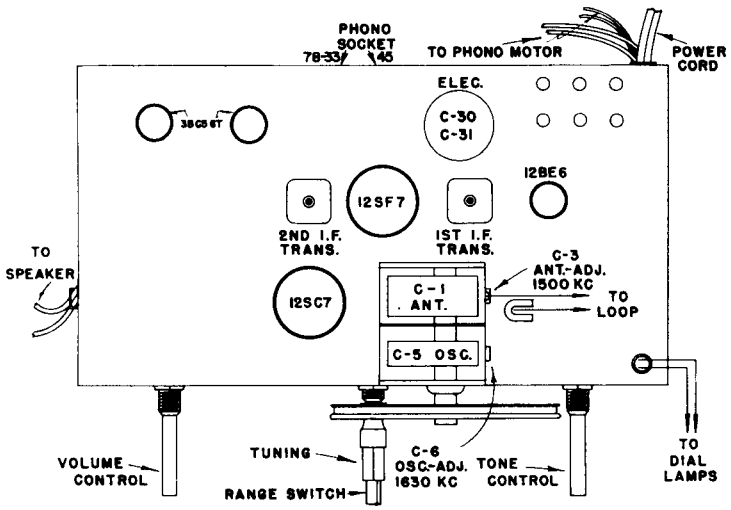

Fig. 3—Chassis Layout & Alignment Adj.

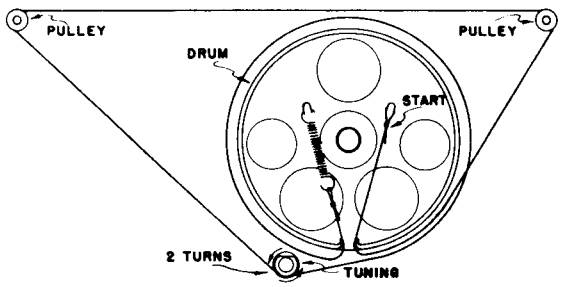

Fig. 4—Dial Cord Stringing

ALIGNMENT PROCEDURE

Before aligning the receiver, set the gang condenser for maximum capacity and then set the dial cursor on the calibration point at the extreme left hand end of the dial.

ALIGNMENT CHART

Order of Alignment		TEST OSCILLATOR				RECIEVER				
		Connect "HI" Side To	Connect "LO" Side To	Dummy Antenna	Frequency Setting	Range Selector	Receiver Dial Setting	Circuit To Adjust	Adjustment Symbols	Notes
I.F. Alignment	1	V-2, 12SF7 Pin #2	GND Common	0.1MFD	455KC	Radio	"HI" End	2nd I.F. Trans.	L-8, L-9	Max. Out.
	2	V-1, 12BE6 Pin #7	Same	Same	Same	Same	Same	1st I.F. Trans.	L-6, L-7	Same
	3	Repeat steps 1 and 2.								
S.B. Alignment	4	"Ant" Lead	Chassis GND	220 MMF	1500 KC	Same	1500 KC	S.B.-Osc.	C-6	Same
	5	Same	Same	Same	1500 KC	Same	1500 KC	S.B.-R.F.	C-2	Same
	6	Repeat Steps 4 & 5								

REPLACEMENT PARTS FOR MODEL V405

Insist on Genuine Factory Tested Parts, which are readily identified and may be purchased from Authorized Dealers.

STOCK NO.	DESCRIPTION
	CHASSIS ASSEMBLY
S-5385	Capacitor, ceramic 10 MMF, 10% 500V (C-20)
	Capacitor, ceramic 56 MMF, 500V (C-8)
S-4614	Capristor, 2-105 MMF, & 47000 ohms(C-17,R-6)
	Capacitor, mica 150 MMF, 10%, 500V (C-34)
S-4221	Capacitor, ceramic 220 MMF, 20% 350V (C-33)
	Capacitor, 560 MMF, 10% (C-40)
	Capacitor, paper .003 MFD, 20% 200V (C-35)
	Capacitor, paper .003 MFD, 10% 400V (C-23)
	Capacitor, paper .005 MFD, 10% 600V (C-28, C-29)
	Capacitor, paper .01 MFD, 10% 200V (C-22)
	Capacitor, paper .01 MFD, 20% 200V (C-11, C-21, C-26, C-36)
	Capacitor, paper .01 MFD, 20% 400V (C-27)
	Capacitor, paper .035 MFD, 10% 400V (C-32)
	Capacitor, paper .05 MFD, 20% 400V (C-4, C-25)
	Capacitor, paper .1 MFD, 10% 400V (C-7, C-14)
S-5703	Capacitor-electrolytic 50-80 MFD, 150V (C-30,C-31)
S-5918	Condenser-gang cond. (C-1, C-5)
S-5919	Control-Volume control (R-15)
S-5920	Control-Tone control (R-14)
*S-6202	Coil-Oscillator coil
S-5459	Resistor, 13.5 ohms at 104°, 95 ohms at 38°, 20% (R-23)
*S-6027	Resistor, 50 ohms 3W (R-22)
	" 120 " 10%, 1W (R-19)
	" 1000 " 10%, 1W (R-21)
	" 15000 " 10%, 1/2 W (R-18)
	" 22000 " 10%, 1/2 W (R-2)
	" 33000 " 10%, 1/2 W (R-16)
	" 39000 " 10%, 1/2 W (R-4)
	" 180000 " 10%, 1/2 W (R-24)
	" 220000 " 20%, 1/2 W (R-2A)
	" 270000 " 10%, 1/2 W (R-10,R-12)
	" 390000 " 10%, 1/2 W (R-27)
	" 470000 " 10%, 1/2 W (R-20)
	" 470000 " 20%, 1/2 W (R-17,R-28)
	" 1.0 meg." 10%, 1/2 W (R-26)
	" 3.3 meg." 20%, 1/2 W (R-5)
	" 10.0 meg." 20%, 1/2 W (R-9,R-11)
S-5702	Switch-Radio-Phono switch (S-1)
S-5382	Selenium rectifier
S-4487	Transformer- 1st. I.F. Trans.
S-4662	Transformer- 2nd. I.F. Trans.
S-5921	Transformer-Output Trans. (T-1)
	SPEAKER ASSEMBLY
S-5922	Speaker (6x9)
S-5923	Cone-Cone & Voice Coil Assy.
	MISCELLANEOUS ASSEMBLY
*S-6028	Cover-Cabinet back cover (Wal-Mah)
*S-6029	Cover-Cabinet back cover (Blonde)
S-4313	Cord-Dial cord
*S-6207	Decals
*S-6030	Dial-dial scale
S-5994	Dial lamp socket & lead assembly
*S-6208	Grille cloth
S-4390	Knob-Tuning (Walnut)
S-5275	" " (Mahogany)
S-5276	" " (Blonde)
S-4387	" -Range SW (Walnut)
S-5277	" " " (Mahogany)
S-5278	" " " (Blonde)
S-3870	" -Vol. & Tone (Walnut)
S-5279	" " " (Mahogany)
S-5280	" " " (Blonde)
S-5699	Loop assembly
S-5272	Pointer-dial pointer
*S-6209	Pull-door pull
36422	Socket-phono socket
S-5925	Trimmer-loop trimmer (C-2)
	* Indicates New Stock Item.

Only items listed under stock numbers are available as Replacement Parts.

All parts subject to change or withdrawal without notice.



MODEL V-405A

RCA VICTOR

"HIS MASTER'S VOICE"

RADIO-PHONOGRAPH COMBINATION

MODEL V405A SERVICE DATA

—1952 No. 2—

GENERAL SERVICE DEPARTMENT
RCA VICTOR COMPANY, LTD.
MONTREAL, QUE.

General Description

The Model V405A is very similar to Model V405 with the exception of the Cabinet. See Parts List below.

For detailed technical information on Model V405A, please refer to the V405 Service Note.

Electrical and Mechanical Specifications

TUNING RANGE

Standard Broadcast ---------- 540-1600 KC
Intermediate Frequency ---------- 455 KC

TUBE COMPLEMENT

(1) Type 12BE6 ---------- Converter
(2) Type 12SK7 ---------- I.F. Amplifier
(3) Type 12SC7 ---------- Audio Phase Inverter
(4) Type 35C5 ---------- Output
(5) Type 35C5 ---------- Output
Rectifier ---------- A selenium rectifier is used
IN34 Crystal, Stock No. S-7579 ---Detector & A.V.C.
Dial lamps (2) ---------- Mazda 47
Tuning Drive Ratio ---------- 11:1 (5½ turns of knob)

POWER SUPPLY RATING

Rating A---105-125 Volts, 25 cycles, .40 amps. 46 watts
Rating B---105-125 Volts, 60 cycles, .40 amps. 46 watts

LOUDSPEAKER

Size and type ---------- 6x9 in. P.M.
Voice coil impedance ---------- 3.4 ohms at 400 cycles

POWER OUTPUT

Undistorted ---------- 2.5 watts
Maximum ---------- 3.5 watts

RECORD CHANGER (RP-168C)

Turntable speed ---------- 45 r.p.m.
Record capacity ---------- eight 7 in.
Pickup ---------- Crystal (Medium output)

RECORD CHANGER (RP200)

Turntable speed ---------- 33-78 r.p.m.
Record capacity ---------- ten twelve or twelve ten
Pickup ---------- Crystal (Medium Output)

CABINET DIMENSIONS

Height ---------- 29⅝ inches
Width ---------- 29½ inches
Depth ---------- 15 1/16 inches

CABINET REPLACEMENT PARTS FOR MODEL V405A

Insist on Genuine Factory Tested Parts, which are readily identified and may be purchased from Authorized Dealers.

STOCK NO.	DESCRIPTION	STOCK NO.	DESCRIPTION
S-6558	Cabinet back (Wal-Mah.)	S-6207	Decalcommania
S-6559	Cabinet back (Blonde)	S-6560	Grille Cloth
S-6030	Dial Scale	S-6209	Pulls—door pulls

Only items listed under stock numbers are available as Replacement Parts.
All parts subject to change or withdrawal without notice.



MODEL V406

RCA VICTOR

RADIO & DUAL PHONOGRAPH COMBINATION

Models V-406 & V-416

SERVICE DATA

— 1951 No. 11 —

GENERAL SERVICE DIVISION
RCA VICTOR COMPANY LIMITED
MONTREAL, QUE.

ELECTRICAL & MECHANICAL SPECIFICATIONS

TUNING RANGE

Standard Broadcast	540-1600 KC.
Short Wave	5.8-19.6 MC.
Intermediate Frequency	455 KC.

TUBE COMPLEMENT

(1) Type 6BJ6	R.F.
(2) Type 12BE6	Converter
(3) Type 12SF7	I.F. Amplifier, Det. & A.V.C.
(4) Type 12SC7	Audio Phase Inverter
(5) Type 35L6GT	Output
(6) Type 35L6GT	Output
Rectifier	A selenium rectifier is used.
Dial lamps (3)	Mazda 1813
Tuning drive ratio	11:1 (5½ turns of knob)

POWER SUPPLY RATING

Rating A	105-125 volts, 25 cycles, .55 amps. 63 watts
Rating B	105-125 volts, 60 cycles, .55 amps. 63 watts

LOUDSPEAKER

Size and Type	10 in. P.M.
Voice coil impedance	3.4 ohms at 400 cycles

POWER OUTPUT

Undistorted	2.5 watts
Maximum	3.5 watts

RECORD CHANGER (RP168C) ON V406 & V416

Turntable speed	45 r.p.m.
Record capacity	eight 7 in.
Pickup	Crystal (med. Out)

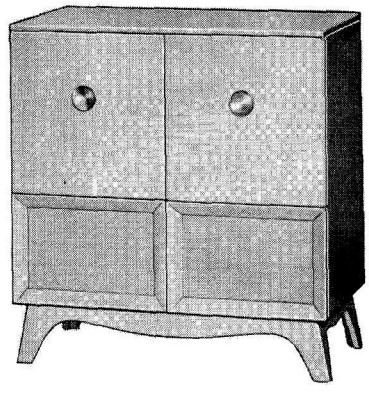

MODEL V416

RECORD CHANGER (RP200) ON V406

Turntable speed	33-78 r.p.m.
Record capacity	ten twelve or twelve ten
Pickup	Crystal (med. Out)

RECORD CHANGER (RP201) ON V416

Turntable speed	33-78 r.p.m.
Record capacity	ten twelve or twelve ten
Pickup	Crystal (med. Out)

CABINET DIMENSIONS	V406	V416
Height	30¾"	31¾"
Width	30¼"	30"
Depth	16"	16½"

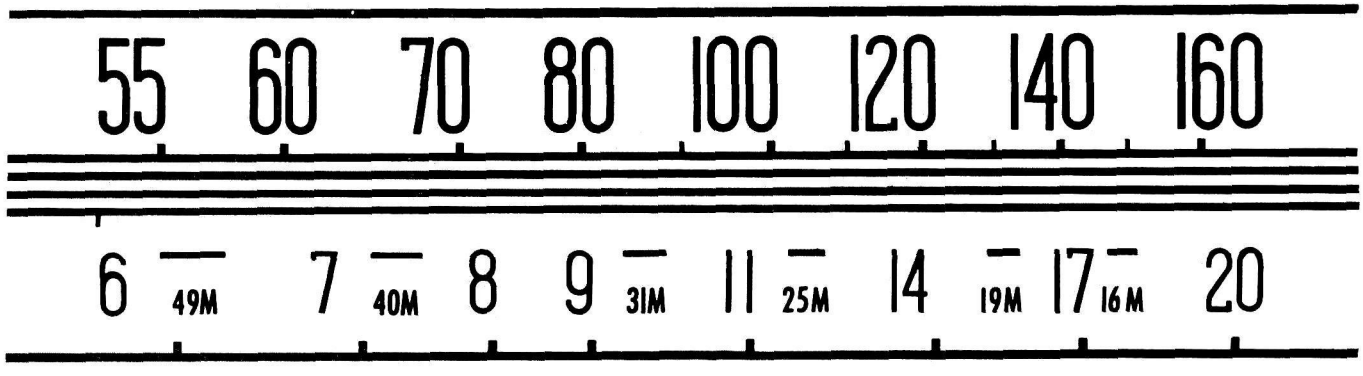

FIG. 1 DIAL SCALE (V406 & V416)

The Dial Scale Drawing shown is a full size reproduction. It can be used as a reference in alignment procedure.

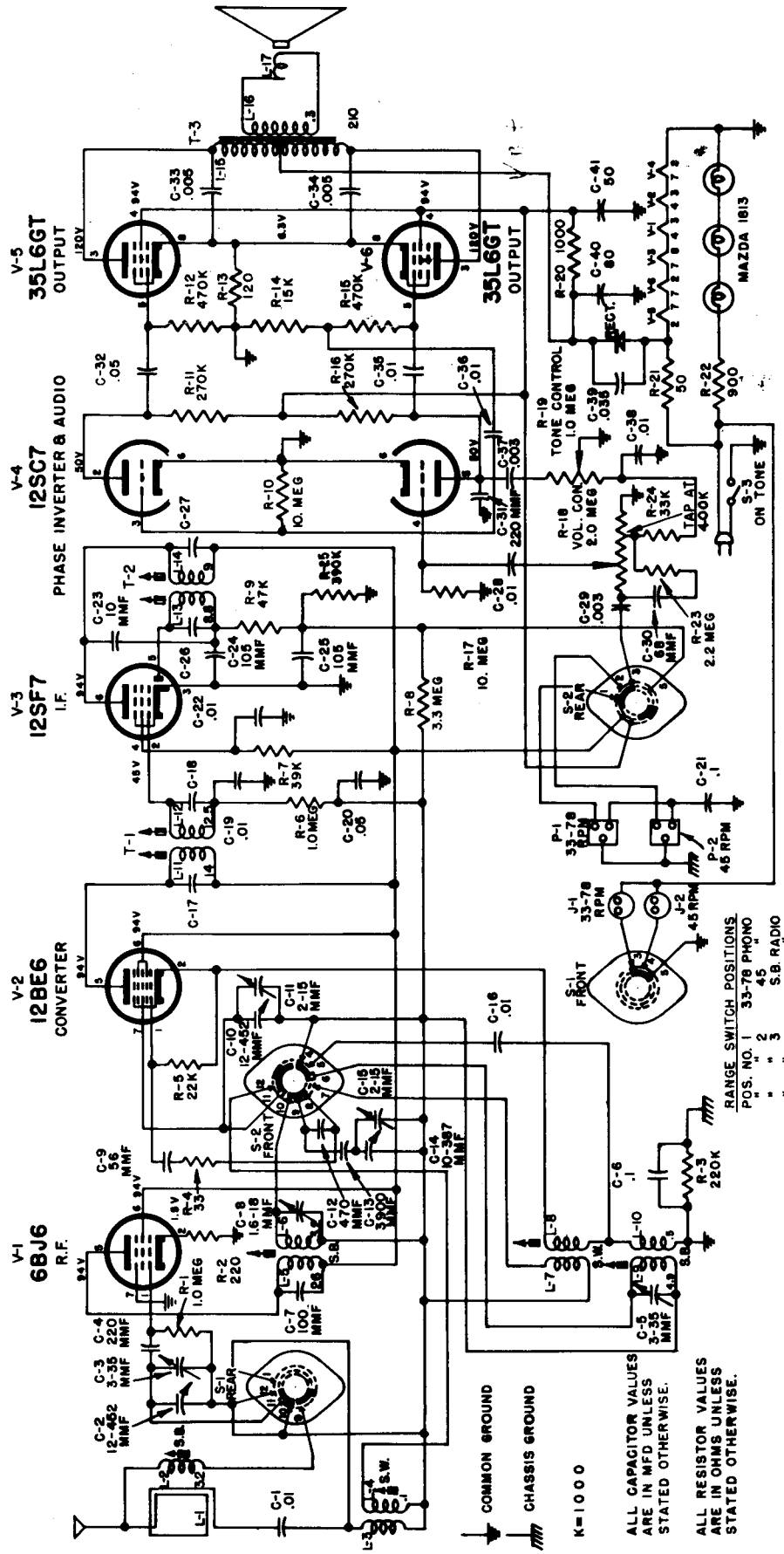

FIG. 2 SCHEMATIC DIAGRAM (V406 & V416)

PHONO COMPENSATION

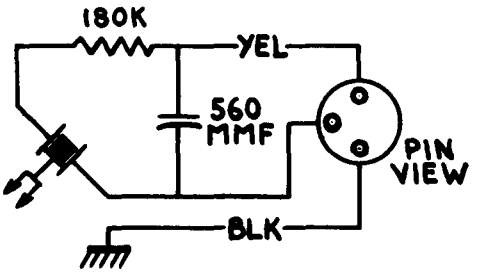

MODEL V406

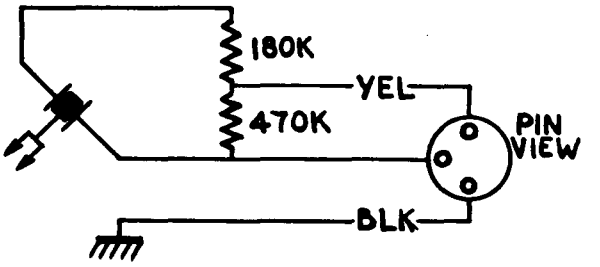

MODEL V416

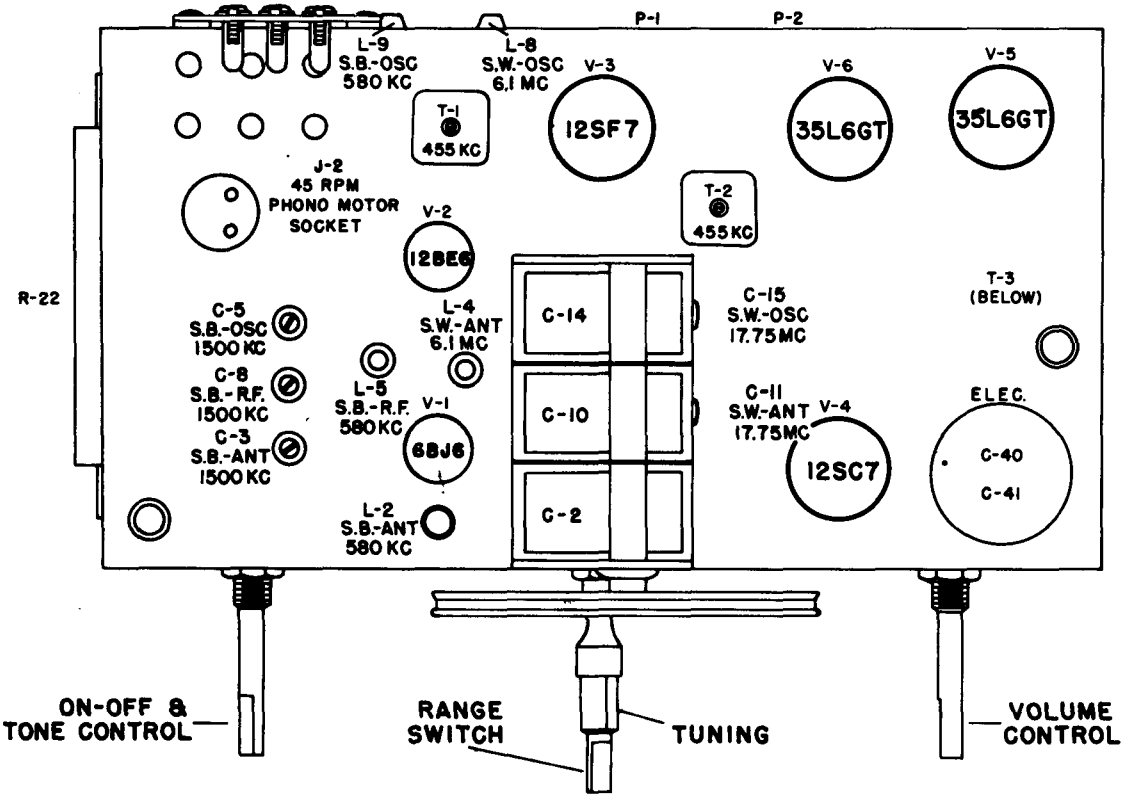

FIG. 3 CHASSIS LAYOUT AND ALIGNMENT ADJUSTMENT.

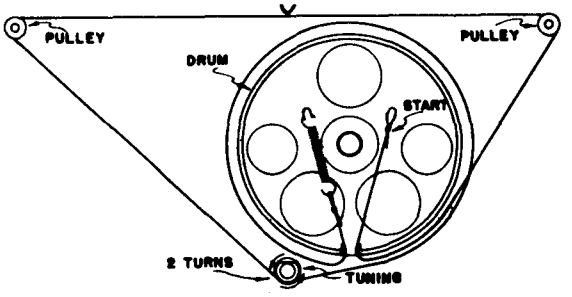

Fig. 4—Dial Cord Stringing

ALIGNMENT PROCEDURE

Before aligning the receiver, set the gang condenser for maximum capacity and then set the dial cursor on the calibration point at the extreme left hand end of the dial.

When only a portion of the circuit is to be aligned select the required portion and perform all the remaining steps.

In order to obtain best results, it is advisable to align the 455 KC I.F.'s with the help of a cathode ray oscilloscope. The scope should be connected across the volume control. If this equipment is not available, use the method outlined below in the alignment chart.

ALIGNMENT CHART

ORDER OF ALIGNMENT		TEST OSCILLATOR				RECEIVER				
		CONNECT "HI" SIDE TO	CONNECT "LO" SIDE TO	DUMMY ANTENNA	FREQUENCY SETTING	RANGE SELECTOR	DIAL SETTING	CIRCUIT TO ADJUST	ADJUSTMENT SYMBOLS	NOTES
I.F. ALIGNMENT	1	Pin #2 12SF7	Gnd.	.1 mfd	455 KC	S.B.	"HI" END	T-2 2nd I.F. Trans.	Top & Bottom Slugs	Max. Out.
	2	Pin #7 12BE6	Same	Same	Same	Same	Same	T-1 1st I.F. Trans.	Top & Bottom Slugs	Same
	3	Repeat steps 1 & 2.								
S.W. ALIGNMENT	4	Ant. Ter. BRD #1	Gnd.	300 ohms	17.75 Mc	S.W.	17.75 Mc.	Osc.	C-15	Same
	5	Same	Same	Same	17.75 Mc	Same	17.75 Mc	Ant.	C-11	Same
	6	Same	Same	Same	6.1 Mc	Same	6.1 Mc	Osc.	L-8	Same
	7	Same	Same	Same	6.1 Mc	Same	6.1 Mc	Ant.	L-4	Same
	8	Repeat steps 4 to 7.								
S.B. ALIGNMENT	9	"HI" Side of Loop	Same	10 mmf	1500 Kc	S.B.	1500 Kc	C-5 C-8 C-3	Osc. R.F. Ant.	Same
	10	Same	Same	Same	580 Kc	Same	580 Kc	L-9 L-5 L-2	Osc. R.F. Ant.	Same
	11	Repeat steps 9 to 10.								

REPLACEMENT PARTS FOR MODELS V-406 & V-416

Insist on Genuine Factory Tested Parts, which are readily identified and may be purchased from Authorized Dealers.

STOCK NO.	DESCRIPTION
	CHASSIS ASSEMBLIES
S-5966	Capacitor, trimmer 3-35 MMF (C-3)
S-5965	" " dual (3-55, 1.618 MMF) (C-S,X-8
* S-6188	Capacitor, Ceramic, 10 MMF., 10% 500 V, (C-23)
S-4523	Capristor, 56 MMF., 33 ohms (C-9, R-4) (C-30)
* S-6215	Capacitor, ceramic, 68 MMF. 10%, 500V. (C-7)
73152	" " 100 MMF, 20%, 500V. (C-24, C-25, R-9)
S-4614	Capacitor, 2-105 MMF., 47000 ohms
S-5940	Capacitor, ceramic 220 MMF. 20%. 350 V. (C-4,C-31)(C-12)
* S-6190	Capacitor, Mica 470 MMF., 5%, 500 V. (C-13)
* S-6216	" " 3900 MMF., 5%, 500 V.
	" .003 Mfd. 10%, 400V. (C-37)
	" .003 Mfd. 20%, 200V. (C-29)
	" .005 Mfd. 10%, 600 V. (C-33, C-34) (C-19,C-28)(C-36,C-38)
	" .01 Mfd. 10%, 200 V.
	" .01 Mfd. 20%, 200 V. (C-1, C-16)
	" .01 Mfd. 20%, 400 V. (C-22, C-35)
	" .035 Mfd. 10%, 400V. (C-39)
	" .05 Mfd. 20%, 200 V. (C-20)
	" .05 Mfd. 20%, 400 V. (C-32)
	" .1 Mfd. 10%, 400 V. (C-6, C-21)
S-5703	" - Electrolytic 50 - 80 Mfd. 150 V. (C-40, C-41)
* S-6235	Coil - S.B. Ant. coil (L-1, L-2)
* S-6182	" S.B. R.F. coil (L-5, L-6)
* S-6181	" - S.B. Osc. coil (L-9, L-10)
* S-6183	" - S.W. Ant. coil (L-3, L-4)
* S-6184	" - S.W. Osc. coil (L-7, L-8)
* S-6186	Condenser - Gang condenser (C-2, C-10, C-11, C-14, C-15)
38403	Control - Volume Control (R-18)
S-5920	" - Tone control (R-19)(S-3)
* S-6217	Rectifier - Selenium
	Resistor - 50 ohms + 10% & 5%
	Resistor - 120 ohms 10% 1 W. (R-13)
	" - 220 " 20% ½ W. (R-2)
* S-6236	" - 900 " 10 W. (R-22)
	" - 1,000 " 10% 1 W. (R-20)
	" - 15,000" 10% ½ W. (R-14)
	" - 22,000" 20% ½ W. (R-5)

STOCK NO.	DESCRIPTION
	Chassis Assembly (Cont'd)
	" - 33,000" 10% ½ W. (R-24)
	" - 39,000" 10% ½ W. (R-7)
	" - 220,000 ohms 20% ½ W. (R-3)
	" - 270,000 " 10% ½ W. (R-11, R-16)
	" - 390,000 " 10% ½ W. (R-25)
	" - 470,000 " 10% ½ W. (R-15)
	" - 470,000 " 20% ½ W. (R-12)
	" - 1.0 Megohm 20% ½ W. (R-1, R-6)
	" - 2.2 " 10% ½ W. (R-23)
	" - 3.3 " 20% ½ W. (R-8)
	" - 10 " 20% ½ W. (R-10, R-17)
* S-6185	Switch - Range switch (S-1)
S-4487	Transformer - 1st I.F. transformer (T-1)
* S-6192	" - 2nd I.F. " (T-2)
* S-6187	" - Output " (T-3)
	SPEAKER ASSEMBLY
S-5813	Speaker 10"
S-5929	Cone - Cone & voice coil assy (L-17)
	MISCELLANEOUS ASSEMBLIES
* S-6194	Back - cabinet back (wal-mah.)(V406)
* S-6195	" - " " (blonde) (V-406)
* S-6249	" - " " " (V-416)
S-5935	Decalcommanias
S-4313	Dial Cord
* S-6193	Dial Scale
* S-6180	Dial Plate Assy
* S-6248	Dore Pulls (V416)
* S-6239	Door Pulls V406
* S-6237	Grille Cloth (Wal.-Mah.) V406
* S-6250	" " " V416
* S-6238	" " (Blonde) V406
* S-6251	" " " V416
S-5275	Knob Assy. (Mah.) (Tuning)
S-4390	" " (Wal.) "
S-5276	" " (Blonde) "
S-5277	" " (Mah.) (Range)
S-4387	" " (Wal.) "
S-5278	" " (Blonde) "
S-5279	" " (Mah.) Vol. & Tone
S-3870	" " (Wal.) " "
S-5280	" " (Blonde) " "
	Lamps - dial & pilot lamps (3)
S-5272	Pointer - dial pointer

* INDICATES NEW STOCK ITEMS

Only items listed under stock numbers are available as Replacement Parts.
All parts and prices subject to change or withdrawal without notice.



MODEL V-408

RCA VICTOR

"HIS MASTER'S VOICE"

RADIO & DUAL PHONOGRAPH COMBINATION

MODEL V-408

SERVICE DATA

—1951 No. 13—

GENERAL SERVICE DEPARTMENT
RCA VICTOR COMPANY, LTD
MONTREAL, QUE.

Electrical and Mechanical Specifications

TUNING RANGES:

Standard Broadcast	540—1600 K.C.
Short Wave	5.8— 19.0 M.C.
Intermediate Frequency	455 K.C.

TUBE COMPLEMENT:

(1) RCA 6BA6	R. F. Amplifier
(2) RCA 6BE6	Converter
(3) RCA 6BA6	I. F. Amplifier
(4) RCA 6AV6	Det. A.V.C. & audio
(5) RCA 6C4	Phase Inverter
(6) RCA 6V6GT	Output
(7) RCA 6V6GT	Output
(8) RCA 6X5GT	Rectifier
Dial Lamps (2)	Mazda 1815
Dial Lamps (2)	Mazda 44
Tuning drive ratio	17:1

POWER OUTPUT

Undistorted	5.5 Watts
Maximum	6.5 Watts

LOUDSPEAKER

Type	12 Inch P.M.
Voice coil impedance	2.2 ohms at 400 cycles.

POWER SUPPLY RATINGS

Rating A, 105-125 volts, 60 cycles, 70 watts
Rating B, 105-125 volts, 25 cycles, 70 watts

CABINET DIMENSIONS

Height	32½"
Width	32"
Depth	16-1/16"

PHONOGRAPH (RP201)

Record capacity	Ten twelve or twelve ten
Turntable speed	33-78 R.P.M.
Pickup	Crystal (Med. out)

PHONOGRAPH (RP168C)

Record capacity	Eight 7-inch
Turntable speed	45 R.P.M.
Pickup	Crystal (Med. Out.)

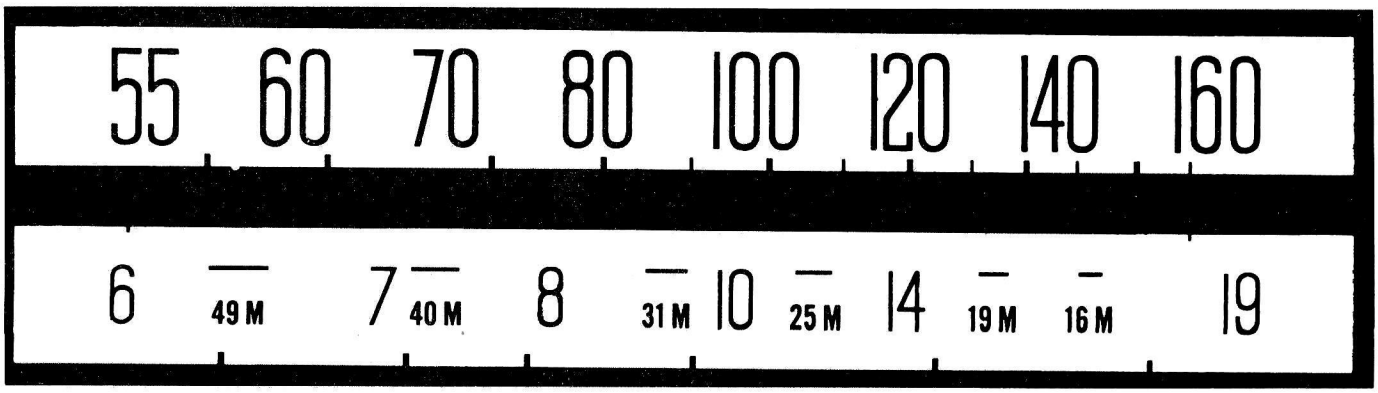

Fig. 1.—The Dial Scale Drawing shown is a full size reproduction. It can be used as a reference in alignment procedure.

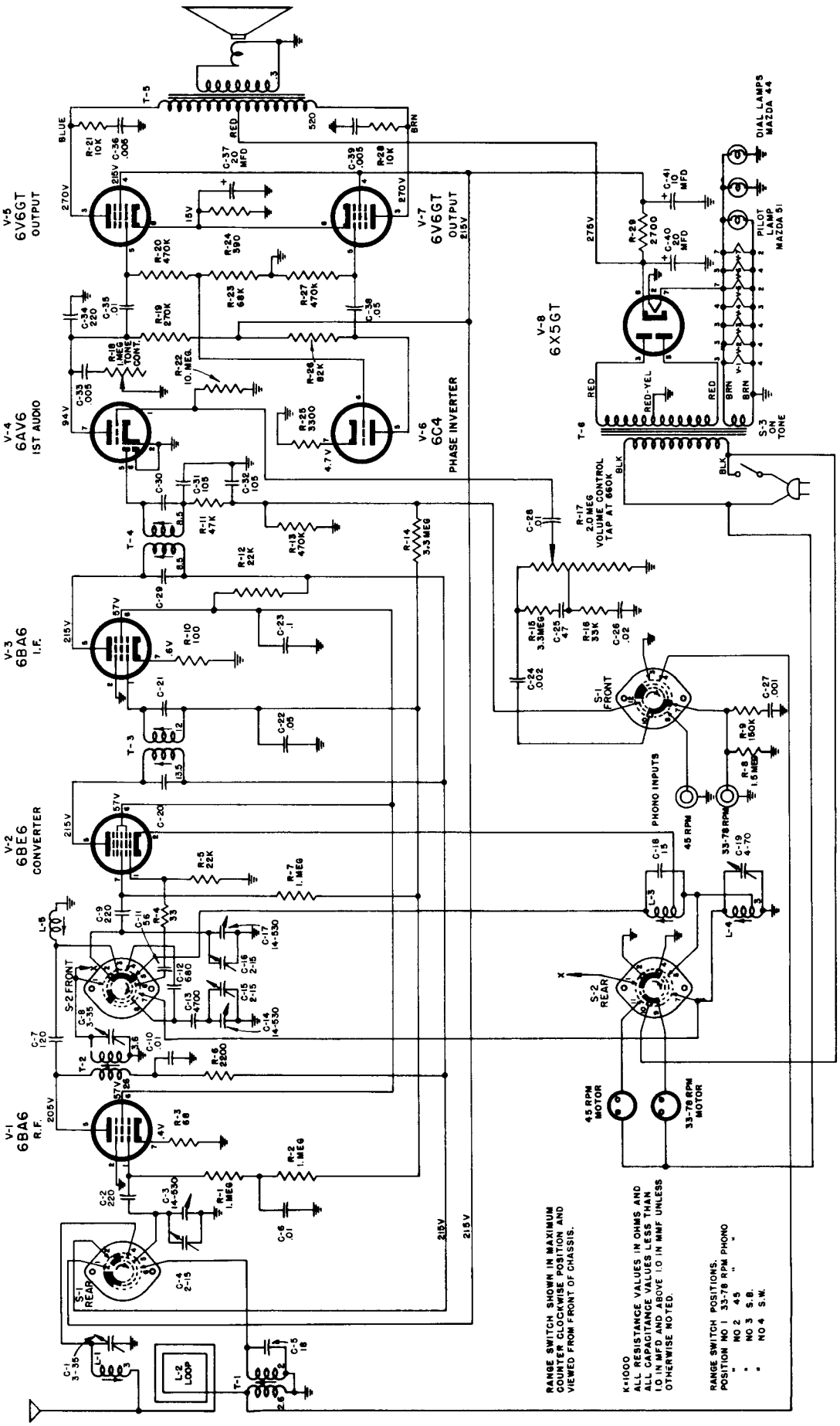

Fig. 2.—Schematic Diagram.

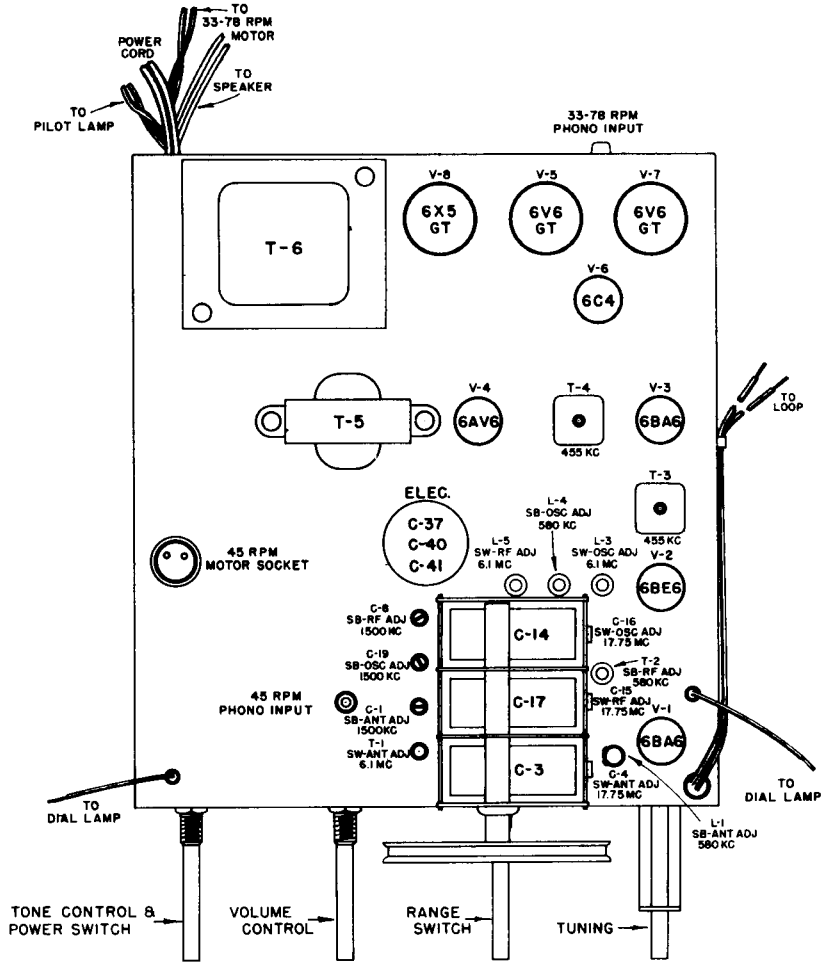

Fig. 3.—Chassis Layout and Alignment Adjustment

Alignment Procedure

Before aligning the receiver, set the gang condenser for maximum capacity and then set the dial cursor on the calibration point at the extreme left hand end of the dial.

When only a portion of the circuit is to be aligned select the required portion and perform all the remaining steps.

In order to obtain best results, it is advisable to align the 455 KC I.F.'s with the help of a cathode ray oscilloscope. The scope should be connected across the volume control. If this equipment is not available, use the method outlined below in the alignment chart.

ALIGNMENT CHART

Order of Alignment		TEST OSCILLATOR				RECEIVER				
		Connect "HI" Side To	Connect "LO" Side To	Dummy Antenna	Frequency Setting	Range Selector	Receiver Dial Setting	Circuit To Adjust	Adjustment Symbols	Notes
I.F. Alignment	1	V-3, 6BA6 Pin #1	GND	1 MFD	455KC	S.B.	'HI' End	2nd I.F. Trans.	T-4 Top & Bottom	Max. Out.
	2	V-2, 6BE6 Pin #7	Same	Same	Same	Same	Same	1st I.F. Trans.	T-3 Top & Bottom	Same
	3	Repeat Steps 1 & 2								
S.W. Alignment	4	Ant Terminal	GND	300 OHMS	6.1 MC	S.W.	17.75 MC	S.W. OSC " RF " ANT	L-3 L-5 T-1	Same
	5	Same	Same	Same	17.75 MC	Same	17.75 MC	S.W. OSC S.W. RF S.W. ANT	C-16 C-15 C- 4	Same
	6	Repeat Steps 4 & 5								
S.B. Alignment	7	Ant Terminal	GND	10 MMF	580 KC	S.B.	580 KC	S.B. OSC S.B. RF S.B. ANT	L-4 T-2 L-1	Same
	8	Same	Same	Same	1500 KC	Same	1500 KC	S.B. OSC S.B. RF S.B. ANT	C-19 C- 8 C- 1	Same
	9	Repeat Steps 7 & 8								

REPLACEMENT PARTS FOR MODEL V-408

Insist on Genuine Factory Tested Parts, which are readily identified and may be purchased from Authorized Dealers.

* STOCK NO.	DESCRIPTION
	CHASSIS ASSEMBLY
*S-6271	Capacitor, trimmer,3 sections 2(3-35 mmf) 1(4-70 mmf.)(C1,C8,C19)
*S-6252	Capacitor, ceramic T.C. 15.0 mmf. 10%, (C18)
*S-6253	Capacitor, ceramic T.C. 18.0 mmf. 10%, (C5)
S-5544	Capacitor, mica 47 mmf. 10% 500 V., (C-25)
S-4523	Capristor, 56 mmf. 33 ohms (C11,R4)
S-4614	" 2-105 mmf. 47,000 ohms (C31, C32,R11)
71614	" Ceramic 120 mmf. 10% (C7)
S-5940	Capacitor, 220 mmf. 20% (C2,C9,C34)
S-5941	" mica 680 mmf. 50% (C12)
S-5942	" " 4700 mmf. 5% (C13)
	" Paper .001 mfd. 10%, 600V. (C27)
	" " .0022 mfd. 20% 600V. (C24)
	" " .0047 mfd. 10% 400V. C-33
	" " .005 mfd. 10% 1,000V. (C36,C39)
	" " .01 mfd. 20% 200 V. C28
	" " .01 mfd. 20% 400 V. C35
73960	" " .01 mfd. C-6,C10
	" " .022 mfd. 10% 200 V. (C26)
	" " .047 mfd. 20% 200 V. C-22
	" " .047 mfd. 20% 400 V. (C-38)
	" " .1 mfd. 20% 400 V.(C-23)
*S-6262	Capacitor Electrolytic 20 Mfd. 400 V. (C40) 10 Mfd. 400 V. (C41) 20 Mfd. 25 V. (37)
*S-6360	Coil - S.B. ant. coil (L-1)
*S-6268	" - S.B.R.F. coil (T-2)
*S-6267	" - S.B. Osc. coil (1-4)
*S-6264	" - S.W. Ant. coil (T-1)
*S-6265	" - S.W. R.F. coil (L-5)
*S-6266	" - S.W. Osc. coil (L-3)
*S-6263	Condenser - Gange condenser & drum (C3, C14,C17,C4,C15,C16)
*S-6258	Control - Tone control (R-18,S-3)
*S-6259	" - Volume " (R-17)
*S-6273	Resistor - 68 ohms 10%, ½ W. (R-3)
*S-6274	" - 100 ohms 10%, W. (R10)
	" - 390 ohms 10%, 2 W. (R24)
	" - 2200 ohms 20%, ½ W. (R6)
	" - 2700 ohms 10%, 2 W. (R29)

STOCK NO.	DESCRIPTION
	CHASSIS ASSEMBLY
	Resistor 3300 ohms 10%, ½ W. (R25)
	" - 10,000 ohms 10%, ½ W. (R21,R28)
	" - 22,000 ohms 20%, ½ W. (R-5)
	" - 22,000 ohms 10%, 2 W. (R12)
	" - 33,000 ohms 10%, ½ W. (R16)
	" - 68,000 ohms 10%, ½ W. (R23)
	" - 82,000 ohms 10%, ½ W. (R26)
	" -150,000 ohms 10%, ½ W. (R9)
	" -270,000 ohms 10%, ½ W. (R19)
	" -470,000 ohms 10%, ½ W. (R20)
	" -470,000 ohms 20%, ½ W. (R27)
	" - 1.0 Megohm 20%, ½ W. R1,R2,R7
	" - 1.5 " 10%, ½ W. (R8)
	" - 3.3 " 20%, ½ W. (R14)
	" - 10.0 " 20%, ½ W. (R22)
*S-6270	Switch - Range switch (S-1,S-2)
S-4487	Transformer - 1st I.F. Transformer
S-5086	" - 2nd " " (T4)
*S-6272	" - Output transformer (T5)
S-4381	" - Power, 25 cycles (T6)
S-4379	" - " 60 " (T6)
	SPEAKER ASSEMBLIES
S-9203	Speaker 12" P.M.
S-9336	Cone - Cone & Voice coil assy.
	MISCELLANEOUS ASSEMBLIES
*S-6260	Back - cabinet back (Wal. Mah.)
*S-6261	" - " " (Oak)
*S-6290	Decalcomania
S-4313	Dial cord
*S-6269	Dial Scale
*S-6291	Door Pulls
*S-6292	Grille Cloth (Wal-Mah.)
*S-6293	Grille Cloth (Oak)
S-6021	Knob Assembly (Range Switch)
S-6019	" " (Vol. tone-tuning)
*S-6254	Lamp socket & lead assy. (dial)
*S-6255	" " & " " (dial)
*S-6256	" " & " " (Jewel)
	Lamps - dial & pilot lamps - use Mazda 44 & 51 respectively
*S-6257	Pointer
30868	Plug-- Phono motor plug
S-4202	Socket - Phono
*S-6275	Socket - Phono motor socket
74421	Springs - Conical mtg. spring for RP168C changer
74422	" " " "
74423	" " " "

* Indicates New Stock Items.

Only items listed under stock numbers are available as Replacement Parts.
All parts subject to change or withdrawal without notice.

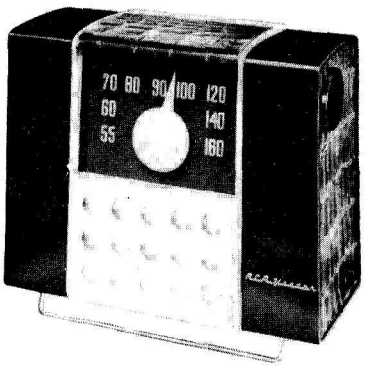

RCA VICTOR

"HIS MASTER'S VOICE"

AC-DC—BATTERY PORTABLE RECEIVER

MODEL BP-500

SERVICE DATA

1949 No. 14

GENERAL SERVICE DIVISION
RCA VICTOR COMPANY LIMITED
MONTREAL, QUE.

Model BP-500

Electrical and Mechanical Specifications

Tuning Range ..... 540-1600 kc.
Intermediate Frequency ..... 455 kc.

Tube Complement

(1) RCA 1R5 ..... Converter
(2) RCA 1U4 ..... I.F. Amplifier
(3) RCA 1U5 ..... Det.—A.V.C.—A.F. Amp.
(4) RCA 3V4 ..... Output
(A selenium rectifier is used)

Power Supply Rating

Power Line Operation
115 volts d.c. or 25 to 60 cycles a.c. ..... 17 watts
or
Battery Operation
1 Eveready 717 "A" Battery ..... 7.5 v., 60 ma.
1 Eveready 467 "B" Battery ..... 67.5 v., 10 ma.
(Battery life—approx. 40 hrs. intermittent service)

Power Output

A.C. operation ..150 mw. undistorted, 250 mw. max.
Batt. operation .. 70 mw. undistorted, 180 mw. max.

Loudspeaker

Size and type ..... 4 in. PM dynamic
Voice coil impedance ..... 3.2 ohms @ 400 cycles

Dial Drive Ratio ..... 6:1 (3 turns of knob)

Cabinet Dimensions

Height 8⅜ in. Width 10½ in. Depth 5 in.

Weight

5½ lbs. (less batteries) 6¼ lbs. (with batteries)

To Open Cabinet:

The back is secured to the cabinet with two clip catches at the top and two hinges at the bottom. To open—while facing the front of the receiver, with the handle in the upright position grip the sides of the cabinet with both hands and push the top of the back to the rear with both thumbs.

To Remove Back:

Open the cabinet as explained above. With the back fully open, grip the cabinet as illustrated. Insert a screwdriver under one hinge retainer and pry the center of the retainer out of the opening in the cabinet while maintaining pressure on the back with the fingers and on the cabinet with the thumb. Repeat this procedure with the other hinge retainer. Pull straight to the rear.

To Remove Cabinet Foot:

Open the cabinet. Grip the end of the spring clip with long nose pliers as illustrated and pull toward the center of the cabinet. Repeat this procedure with the other clip.

To Remove Chassis:

1. Remove knobs (pull off)
2. Open cabinet.
3. Unsolder loop leads.
4. Disconnect batteries and speaker.
5. Remove the two screws which hold the dial back plate to the cabinet.
6. Remove the TWO SCREWS AT THE BOTTOM EDGE OF THE REAR CHASSIS APRON.
7. Pull chassis to rear.

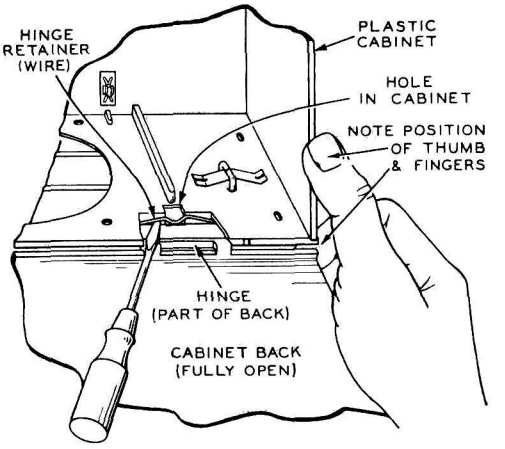

Fig. 1—Removal of Cabinet Back

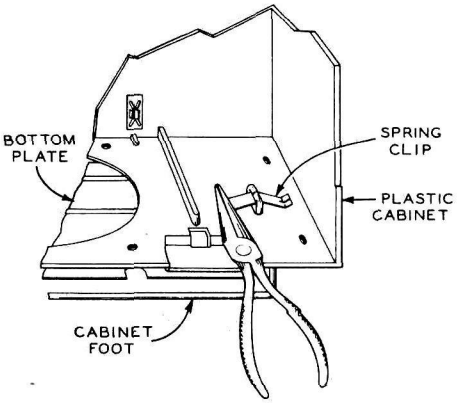

Fig. 2—Removal of Cabinet Foot

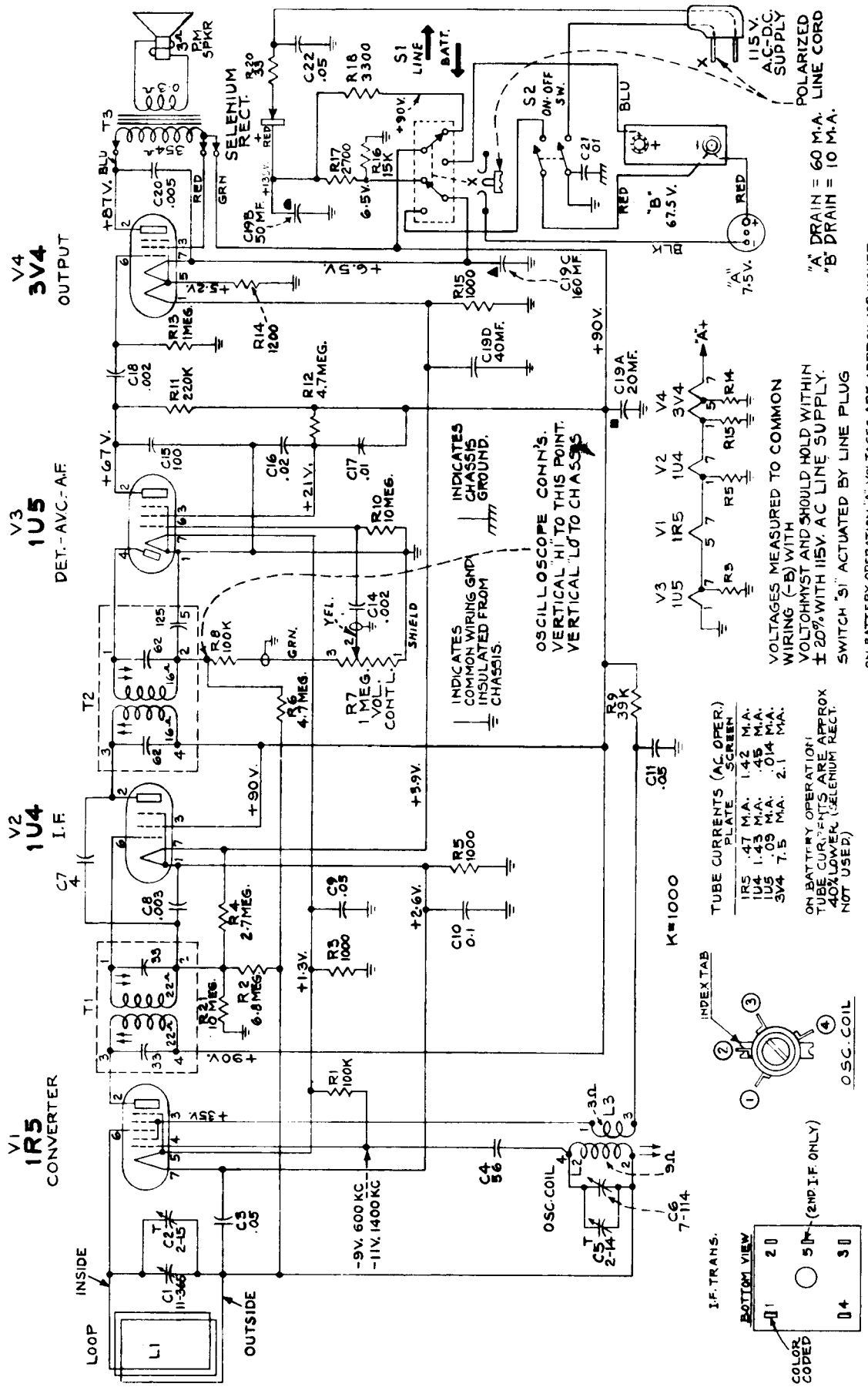

Fig. 3—Schematic Diagram

Power Line Operation:

A power cord is stored inside the cabinet. Open the cabinet and remove the plug of the power cord from its socket on the chassis and insert the plug into a convenient electrical outlet. A slot in the right-hand end of the cabinet allows the back to be closed with the cord passing through.

NOTE: If reception is not obtained on DC, reverse plug in outlet receptacle. On AC operation this may reduce hum.

When returning to battery operation replace the plug in the socket provided on the chassis, with the cord extending toward the back.

NOTE: Make certain that the plug is fully inserted (base of plug touching chassis) to assure proper operation of the Batt-Line switch.

CAUTION.—

Do not remove any tubes from the chassis with the set operating and the plug connected to the power line. Damage to tubes may result.

CRITICAL LEAD DRESS

1. Dress 1U4 grid lead down against chassis.
2. Dress all filament and ground leads against chassis.
3. Dress the 4 mmf. neutralizing capacitor C7 against the 1U4 tube socket with short lead at the plate end.
4. Dress .002 mf. capacitor C14 down against chassis and away from other wiring.
5. Dress .05 mf. capacitor C9 down over top of C14.
6. Dress capacitors C10 and C22 away from oscillator coil so that pressure is not exerted on the side of the coil.
7. Dress all wiring away from the selenium rectifier.
8. Dress .003 mf. capacitor C8 as near chassis as possible.

ALIGNMENT PROCEDURE

Cathode Ray Alignment is the preferable method. Connections for the oscilloscope are shown on the schematic diagram.

Output meter Alignment.—If this method is used, connect the meter across the voice coil and turn the receiver volume control to maximum.

Test Oscillator.—For all alignment operations, connect the low side of the test oscillator to the receiver chassis and keep the oscillator output as low as possible to avoid AVC action.

Battery operation of the receiver is preferable during alignment; on a.c. operation an isolation transformer (117v./117v.) may be necessary for the receiver if the test oscillator is also a.c. operated.

Dial Pointer Position.—There are two score marks on the dial back plate—with the tuning condenser fully meshed (closed) the pointer should be set to the LEFT HAND MARK.

The RIGHT HAND MARK is for 1600 kc.

The dial is not easily removed. A reproduction of the dial is illustrated on another page. It is suggested that a tracing be made of it for use in alignment.

ALIGNMENT CHART

Order Of Alignment		TEST OSCILLATOR				RECEIVER				
		Connect "HI" Side to	Connect "LO" Side to	Dummy Antenna	Frequency Setting	Range Selector	Dial Setting	Circuit to Adjust	Adjustment Symbols	Notes
I.F. Alignment	1	Disconnect loop - remove chassis - connect a 1000 OHM resistor from C1 stator terminal to tuning condenser frame.								
	2	C-1 Gang	GND	39MMF	455KC		1600KC	2nd I.F. Trans.	T-2 Top & bottom	Max. Out.
	3	Remove the 1000 OHM resistor. Replace but do not fasten chassis in cabinet. Re-connect loop.								
R.F. Alignment	4	Radiate Signal			1630KC		Max. clock-wise	Osc.	†C-5	Max. Out.
	5	Same			1400KC		1400KC	Ant.	†C-2	"
	6	Same			600KC		600KC	Osc.	L-2 Rock Gang	"
	7	Repeat steps 4, 5 and 6								
	8	Fasten chassis to cabinet.								

†C5 and C2 are more readily accessible if the chassis is not fully inserted into the cabinet. However the chassis should be near its proper position because its position affects the inductance of the loop.

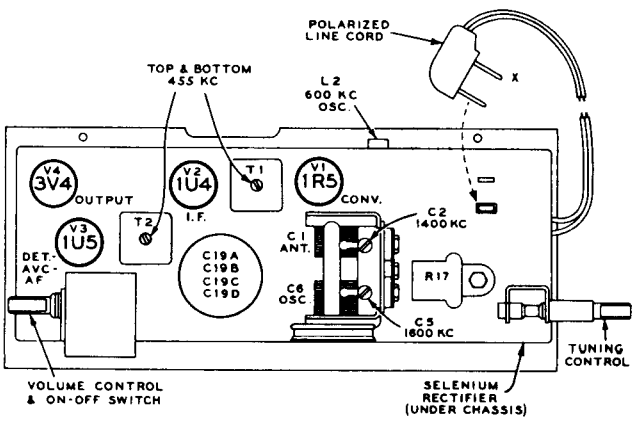

Fig. 4—Tube and Trimmer Locations

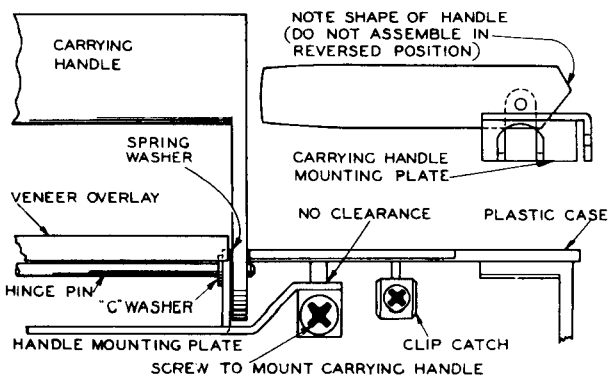

Fig. 5—Carrying Handle Assembly

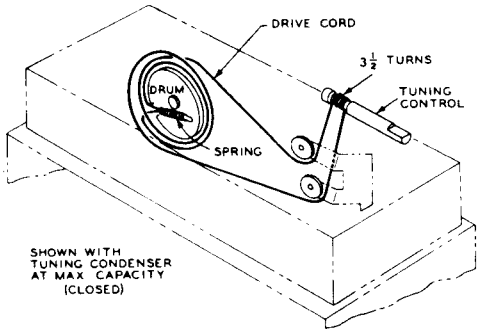

Fig. 6—Dial Drive Cord

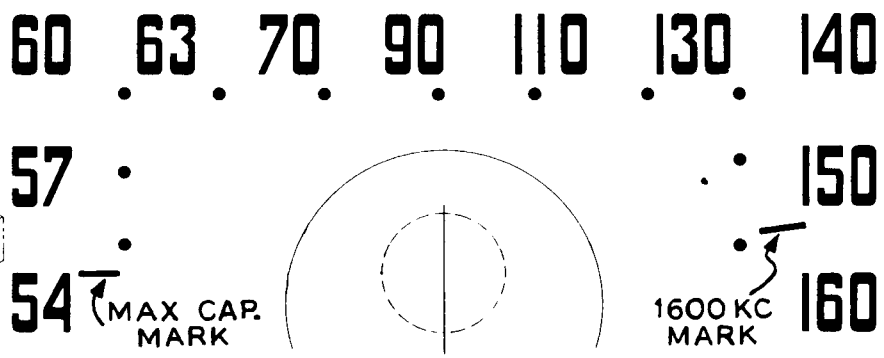

Fig. 7—Dial Scale

REPLACEMENT PARTS FOR MODEL BP-500

Insist on genuine factory tested parts, which are readily identified and may be purchased from authorized dealers.

Stock No.	Description	List Price
	CHASSIS ASSEMBLY	
73153	Capacitor 4 MMf. Ceramic (C7)	
71924	" 56 " " (C4)	
73152	" 100 " " (C15)	
	" .002 Mfd. 200 V. Paper (C14,C18)	
	" .003 Mfd. 200 V. Paper (C8)	
	" .005 Mfd. 400 V. " (C20)	
	" .01 Mfd. 100 V. " (C17)	
	" .02 Mfd. 100 V. " (C16)	
	" .05 Mfd. 100 V. " (C9)	
	" .05 Mfd. 400 V. " (C11)	
	" .05 Mfd. 400 V. " (C3,C22)	
	" .1 Mfd. 100 V. " (C10)	
	" .1 Mfd. 400 V. " (C21)	
73113	" Electrolytic	
	50 Mfd. 150 V. (C19A)	
	20 Mfd. 150 V. (C19B)	
	160 Mfd. 25 V. (19C)	
	40 Mfd. 25 V. (C19D)	
S-4334	Coil - Osc. coil with core & stud (L2,L3)	
74323	Condenser - Variable tuning condenser (C1,C2,C5,C6)	
S-5340	Resistor - 33 Ohms (R20)	
	" - 1,000 " ½ watt+ - 10% (Re, R5, R15)	
	" - 1,200 " ½ watt + - 10% (R14)	
	" - 3,300 " ½ watt + - 10% (R18)	
	" -15,000 " ½ watt + - 10% (R16)	
	" -39,000 " ½ watt + - 10% (R9)	
	" -100,000 " ½ watt + - 20% (R8)	
	" -100,000 " ½ watt + - 10% (R1)	
	" -220,000 " ½ watt + - 20% (R11)	
	" - 1 Megohm ½ watt + - 20% (R13)	
	" -2.7 " ½ watt + - 10% (R4)	
	" -4.7 " ½ watt + - 10% (R12)	
	" -4.7 " ½ watt + - 20% (R6)	
	" -6.8 " ½ watt + - 10% (R2)	
	" -10 " " " " " (R10)	
	" -10 " " " " " (R21)	
74319	" - Ballast resistor 2700 ohms (R17)	

Stock No.	Description	List Price
	CHASSIS ASSEMBLY (CONT'D)	
74322	Rectifier - Selenium rectifier	
74320	Shaft - Drive shaft	
71039	Switch - "Line - Battery" switch	
73129	Transformer - 1st I.F. Transformer	
73130	" - 2nd I.F. "	
73125	Volume Control - 1 Megohm (R7-S2)	
	SPEAKER ASSEMBLY	
S-5341	Cone - cone & voice coil assembly	
S-5343	Transformer - Output Transformer	
	MISCELLANEOUS ASSEMBLY	
74326	Antenna - loop antenna (L1)	
S-5064	Cabinet	
74328	Cabinet - back assembly	
74345	Catch assembly	
S-4313	Cord - Dial cord	
74334	Dial - dial scale	
74330	Door - dial door	
74331	Foot	
S-5065	Handle	
73490	Knobs	
74321	Pointer - dial pointer	
74346	Push button	
14270	Spring - spring for knob (Pkg. 2)	
74347	Spring	
74348	Screw - self tapping screw (Pkg. 3)	
S-5066	Trim - R.H.	
S-5067	Trim - L.H.	
S-5068	Veneer	
S-5069	Washer (Pkg. 3)	
74353	Washer - "C" washer for carrying handle hinge pin	
74562	Washer - Spring washer for carrying handle hinge pin (2 req.)	
74343	Washer - Spring washer for dial drop door (2 req.)	

Parts indicated by * and those not shown in the parts list are not supplied as replacement parts.

All parts and prices subject to change or withdrawal without notice.

RCA VICTOR

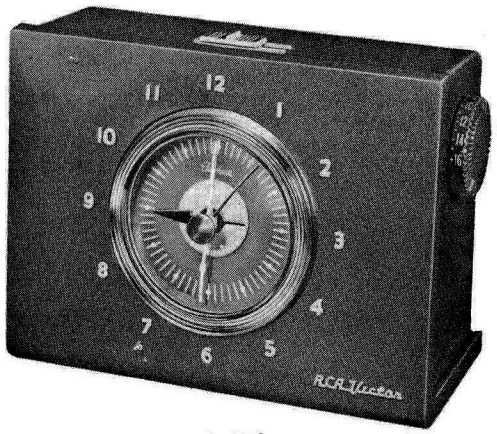

C-501

A-C OPERATED CLOCK RADIO RECEIVER

Model C501
SERVICE DATA

— 1952 No. 12 —

HEAD OFFICE SERVICE DEPARTMENT
RCA VICTOR COMPANY, LTD
MONTREAL, QUE.

ELECTRICAL AND MECHANICAL SPECIFICATIONS

Tuning Range ..... 540-1600 kc
Intermediate Frequency ..... 455 kc
Tube Complement:
(1) RCA 12BE6 ..... Converter
(2) RCA 6BJ6 ..... I.F. Amplifier
(3) RCA 12AV6 ..... Det.-AVC-A.F. Amp.
(4) RCA 6AK6 ..... Output
RCA Stock No. S-6765 ..... Rectifier
Power Supply Rating:
115 volts a.c., 60 cycles ..... 20 watts
CAUTION: DO NOT OPERATE ON D.C.

Loudspeaker:
Size and type ..... 3 in. P.M.
Voice Coil impedance ..... 3.2 ohms at 400 cycles
Power Output:
Undistorted ..... 0.19 watts
Maximum ..... 0.35 watts
Tuning Drive Ratio ..... 1 to 1 (Direct Drive)
Weight ..... 4½ lbs.
Dimensions (overall):
Height....6" Width....8½" Depth....4½"

OPERATING INSTRUCTIONS

This instrument contains a timer-type electric clock mechanism which may be used to automatically actuate the self-contained a.c. radio. The radio may also be operated independently of the clock mechanism.

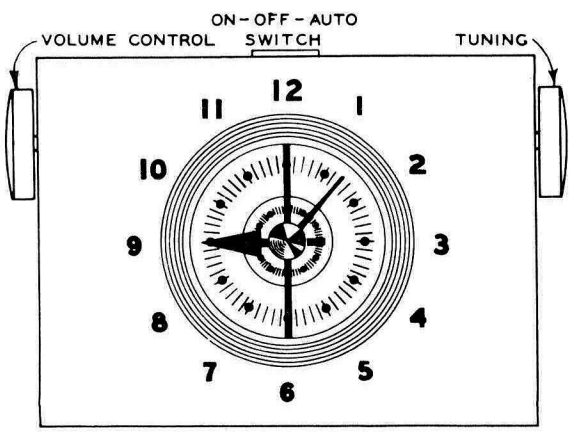

Clock Radio Controls

CLOCK—1. Plug instrument into 115 v. a.c. outlet. The clock will start to operate immediately. Set the correct time by turning clockwise, the "TIME" knob located at the center of the instrument back. To set the alarm, turn the "ALARM" knob clockwise until the desired time is indicated by the alarm pointer extension on the hour hand. Pull knob out for alarm buzzer operation. To turn off buzzer, push knob in.

RADIO—1. To obtain radio operation independently of the clock, push the slide switch lever at the top of the cabinet to the left "ON" position. Adjust volume and tuning control knobs as required after approximately 30 second warm-up. To increase volume turn knob clockwise as viewed from volume control side panel. Push slide switch lever to the center "OFF" position when finished listening.

2. To automatically actuate the radio by the clock mechanism, make initial volume and station settings as described in section 1 above. Set the "ALARM" knob to the time desired. Push slide switch lever to the right "AUTO" position. If the alarm buzzer knob is pulled out, the alarm will sound approximately ten minutes after the radio starts operating. Push alarm knob in to turn off alarm. The radio will turn itself off after a period of approximately one hour if the slide switch remains in the "AUTO" position after start of playing.

CAUTION—Keep slide switch "ON-OFF-AUTO" lever in "OFF" position when instrument is not in use. Locate instrument so that "TIME" and "ALARM" knobs have free movement.

ALIGNMENT PROCEDURE

Output Meter Alignment—If this method is used, connect the meter across the voice coil and turn the receiver volume control to maximum.

Test-Oscillator—For all alignment operations, connect the low side of the test-oscillator to the receiver chassis, and keep the oscillator output as low as possible to avoid AVC action.

On a.c operation an isolation transformer (115 v./115 v.) may be necessary for the receiver if the test oscillator is also a.c. operated.

ALIGNMENT TABULATION

Step	Connect the high side of test-oscillator to—	Tune test-osc. to—	Turn radio dial to—	Adjust the following for max. output
1	6BJ6 I-F grid through .01 mfd. capacitor	455 kc	Quiet-point 1600 kc end of dial	T2 (top and bottom) 2nd I-F trans.
2	Stator of C1-A through .01 mfd.			T1 (top and bottom) 1st I-F trans.
3	Short wire placed near loop to radiate signal	1620 kc	Min. cap.	osc. trimmer C1B-T
4		1400 kc	1400 kc signal	ant. trimmer C1A-T
5		600 kc	600 kc (rock)	(osc. coil) Slug L3
6		Repeat steps 3, 4, and 5		

RADIO CHASSIS AND CLOCK SERVICE

TOOL REQUIREMENTS—A small #1 size cross-head screwdriver is required for disassembly of the radio into its major cabinet and chassis components.

TUBE SERVICE—Disassembly—To make tubes accessible for testing, remove the volume and tuning control knobs by pulling off. Unscrew counterclockwise the alarm and time knobs from their shafts. Invert the cabinet and remove only the two cross-head screws along the back underside of the cabinet. Place the cabinet in its normal position. Using only firm hand pressure, press down alternately at front right and left sides of the cabinet top, midway between the "ON-OFF-AUTO" slide switch lever and the cabinet sides, forcing down and backward, to disengage the molded-in plastic catches. Then lift off the cabinet rear cover.

Assembly—To reassemble, proceed in the reverse order, sliding the cabinet rear cover into its track on the cabinet base. Lift the front corners up slightly to clear the two molded-in pads at each front corner of the cabinet base. Then press down and snap-in the upper front edge of the cabinet rear cover under the top rim of the cabinet base. Make sure the slide switch and switch lever are in corresponding center "OFF" positions. Reassemble clock and radio knobs, and the two screws securing the cabinet rear cover.

RADIO CHASSIS SERVICE—Disassembly—To service chassis, open case as described above. In addition, remove the single cross-head screw remaining at the front underside of the cabinet and also the two cross-head screws located on the chassis near the tuning gang and the volume control. Lift out the chassis and remove the four self-tapping cross-head screws holding the bottom cover to the chassis. Lift off the bottom cover.

Assembly—Reassemble in the reverse order. Secure the bottom cover to the chassis with the four self-tapping screws. Next, insert the single self-tapping screw holding the chassis to the bottom of the cabinet base. Center the chassis mounting holes so that they line up with the holes in the cabinet and replace the two cross-head machine screws. Tighten just sufficiently to hold the chassis firmly. Do not turn the screws to the possible limit of travel unless this is necessary to hold the chassis firmly. The average receiver may have a $\frac{1}{32}$" clearance between the chassis metal panel and molded plastic boss. If any of the four foam rubber cushions on the bottom cover register in the clock face after assembly, push the excess length under the "Z" tabs of the bottom cover.

CLOCK SERVICE—Disassembly—To service clock, remove chassis and bottom cover as described above. In addition, remove the three screws holding the speaker to the speaker mounting bracket. Remove the two hex nuts holding the clock to the chassis pan recess. Lift the clock out. Unsolder the clock leads at the clock terminals.

Assembly—Proceed in the reverse order. Solder clock leads, and secure clock to chassis pan with two hex head nuts. Reassemble speaker to speaker mounting bracket.

CRITICAL LEAD DRESS

1. Filament leads should be dressed away from secondary output lead, terminal #1, of 2nd I.F. Transformer and secondary output lead, terminal #1, of 1st I.F. transformer.
2. Connect the outside foil of capacitors as shown on schematic.
3. Dress electrolytic capacitor leads and filament transformer leads away from selenium rectifier.
4. Plate and grid leads of 12BE6 and 6BJ6 tubes should be kept as short and direct as possible.

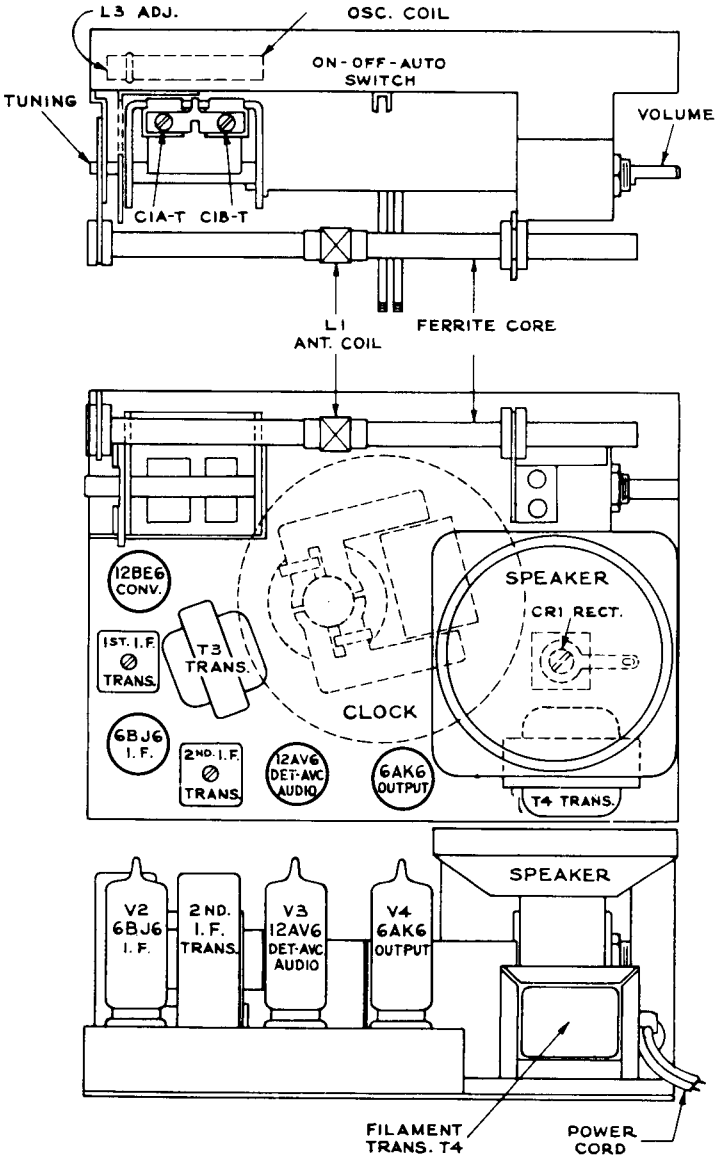

Tube and Trimmer Locations

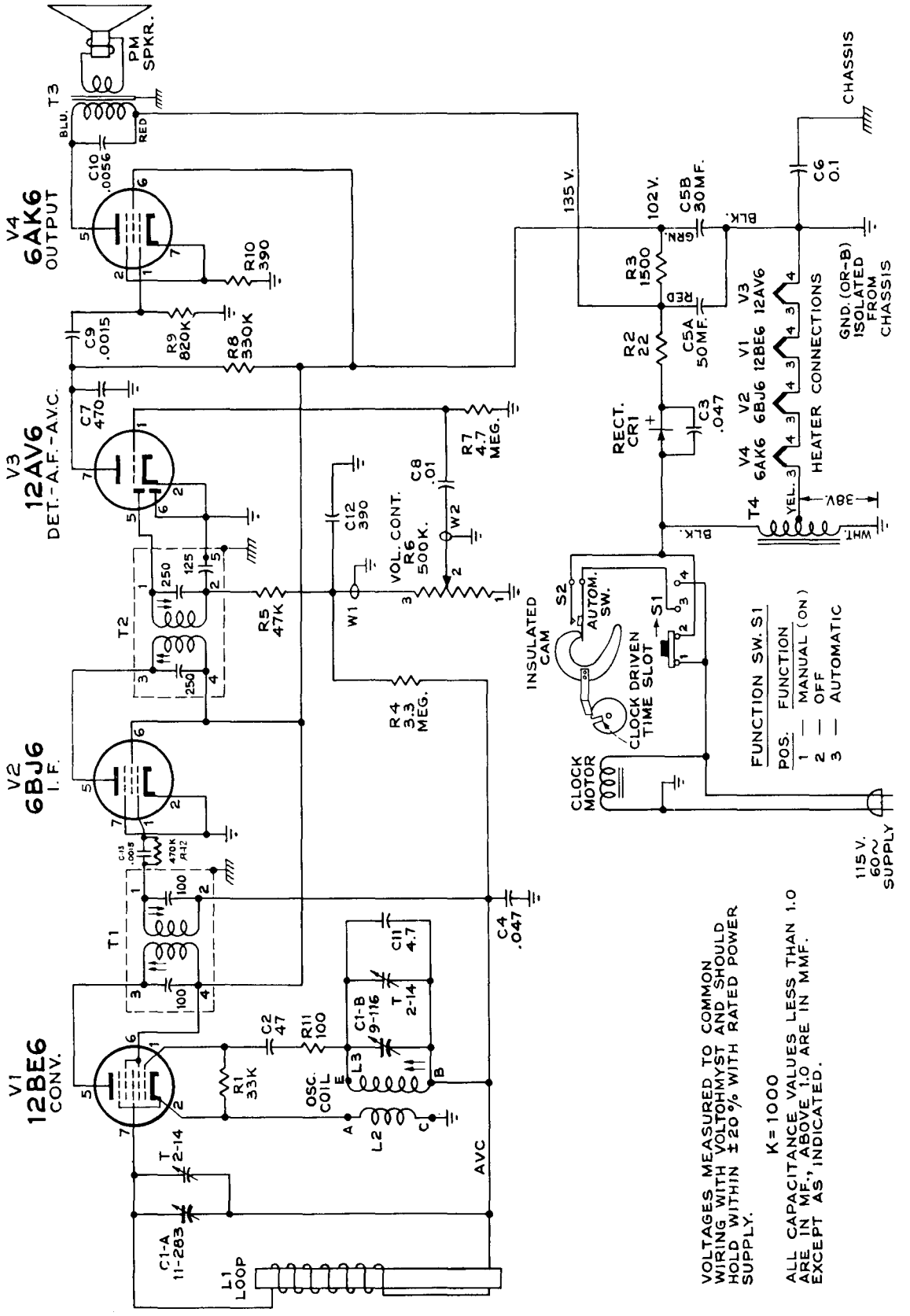

Schematic Circuit Diagram

VOLTAGES MEASURED TO COMMON WIRING WITH VOLTOHMYST AND SHOULD HOLD WITHIN ±20% WITH RATED POWER SUPPLY.

K=1000

ALL CAPACITANCE VALUES LESS THAN 1.0 ARE IN MF., ABOVE 1.0 ARE IN MMF. EXCEPT AS INDICATED.

REPLACEMENT PARTS

STOCK NO.	DESCRIPTION
	CHASSIS ASSEMBLIES
*S-6767	Antenna-Ferrite rod antenna complete with windings L1
*S-6771	Capacitor-Variable tuning capacitor..C1A, C1B
	Capacitor-Ceramic, 4.7 mmf. C11
	Capacitor-Ceramic, 47 mmf..... C2
	Capacitor-Ceramic, 390 mmf..... C12
	Capacitor-Ceramic, 470 mmf..... C7
*S-6760	Capacitor-Electrolytic comprising 1 section of 50 mfd., 150 volts and 1 section of 30 mfd., 150 volts .....,C5A, C5B
	Capacitor-Tubular, paper, .0015 mfd., 200 volts C9
	Capacitor-Tubular, paper, .0056 mfd., 400 volts C10
	Capacitor- Tubular, paper, .01 mfd., 200 volts C8
	Capacitor-Tubular, paper, .047 mfd., 400 volts C4
	Capacitor-Tubular, moulded, .047 mfd., 400 volts C3
	Capacitor-Tubular, paper, 0.1 mfd., 400 volts C6
	Capacitor-Tubular, paper, .0015 mfd., 400 volts C13
*S-6761	Coil-Oscillator coil complete with adjustable core L2, L3
*S-6768	Control-Volume control R6
*S-6370	Cord-Power cord and plug
*S-6765	Rectifier-Selenium rectifier CR1
	Resistor-Fixed, composition:-
	22 ohms, ±10%, 1/2 watt R2
	100 ohms, ± 10%, 1/2 watt R11
	390 ohms, ± 10%, 1/2 watt R10
	1500 ohms, ± 10%, 2 watts R3
	33,000 ohms, ± 10%, 1/2 watt R1
	47,000 ohms, ± 10%, 1/2 watt R5
	330,000 ohms, ± 10%, 1/2 watt R8
	820,000 ohms, ± 10%, 1/2 watt R9
	3.3 megohm, ± 10%, 1/2 watt R4
	4.7 megohm, ± 10%, 1/2 watt R7
	470,000 ohms, ± 10%, ... R12
*S-6783	Switch-Function switch S1
*S-6762	Transformer-Filament transformer 117 volts A.C. input T4
*S-6763	Transformer-Output transformer T3
*S-6769	Transformer-1st. I.F. transformer complete with adjustable cores T1
*S-6770	Transformer-2nd. I.F. transformer complete with adjustable cores T2
	SPEAKER ASSEMBLIES
*S-6776	Speaker-3" P.M. speaker complete with cone and voice coil (3.2 ohms)
	MISCELLANEOUS
*S-6812	Back-Polystyrene cabinet back-ivory
*S-6813	Back-Polystyrene cabinet back-red
*S-6811	Back-Polystyrene cabinet back - gray
*S-6766	Button-Slide button for function switch less clip
*S-6809	Case-Polystyrene case front-ivory-complete with window less back
*S-6810	Case-Polystyrene case front-red-complete with window less back
*S-6808	Case-Polystyrene case front-black-complete with window less back
77434	Clip-Spring clip for function swith slide button
*S-6779	Dial-Dial knob-ivory
*S-6781	Dial-Dial knob-red
*S-6777	Dial-Dial knob-gray
*S-6780	Knob-Volume control knob-ivory
*S-6782	Knob-Volume control knob-red
*S-6778	Knob-Volume control knob-gray
*S-6772	Knob-Timer knob
*S-6773	Clock Mechanism - Grey
*S-6774	" " - Ivory
*S-6775	Clock Mechanism - Red
	CLOCK ASSEMBLY
	For clock parts please refer to C83G1, 2 & 3 Service Notes

*Indicates New Stock Items

Only items listed under stock numbers are available as Replacement Parts.
All parts subject to change or withdrawal without notice.

RCA VICTOR

"HIS MASTER'S VOICE"



MODEL BT502

BATTERY RECEIVER

MODEL BT502

SERVICE DATA

—1950 No. 1—

GENERAL SERVICE DIVISION
RCA VICTOR COMPANY LIMITED
MONTREAL, QUE.

Electrical and Mechanical Specifications

FREQUENCY RANGES

"Standard Broadcast" ..... 540 kcs. to 1600 kcs.
Intermediate Frequency ..... 455 kcs.

RADIOTRON COMPLEMENT

(1) Type-1R5 ..... First Detector—Oscillator
(2) Type-1U4 ..... Intermediate Amplifier
(3) Type-1U5 ..... Second-Detector, A.V.C., and A-F Amplifier
(4) 1A5GT ..... Power Output
(5) 1A5GT ..... Power Output

POWER OUTPUT RATING

Undistorted ..... .2 watts
Maximum ..... .4 watts

LOUDSPEAKER

Type ..... 4" x 6" Elliptical P.M.
Voice-Coil Impedance ..... 3.2 Ohms at 400 Cycles

CABINET DIMENSIONS

Height ..... 6⅜ inches
Width ..... 11⅜ inches
Depth ..... 7 inches

CURRENT CONSUMPTION

"A" at 1.4 Volts ..... 250 Ma.
"B" at 90 Volts ..... 12½ Ma.

Batteries Required ..... One No. 758T Eveready Pack.
OR "A"—one 1.4 Volt Air Cell or 1.5 Dry Cell. "B"—two 45 Volt heavy duty "B" Batteries.

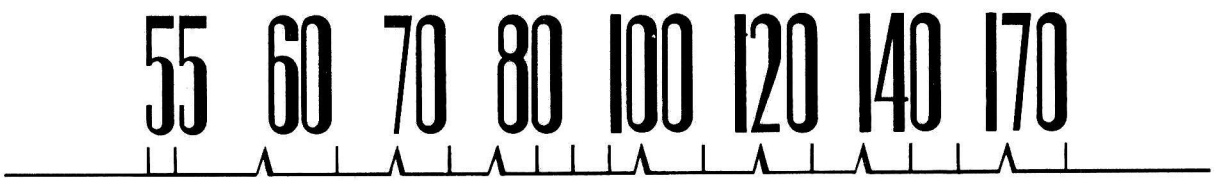

The Dial Scale drawing shown is a full size reproduction. It can be used as a reference in alignment procedure.

Fig. 1—Dial Scale

REPLACEMENT PARTS FOR MODEL BT502

Insist on Genuine Factory Tested Parts, which are readily identified and may be purchased from Authorized Dealers.

STOCK NO.	DESCRIPTION	LIST PRICE
	CHASSIS ASSEMBLY	
S-5128	Capacitor-Ceramic 4 MMF (C16)	
S-5596	" - " 5 MMF (C7)	
71924	" - " 56 MMF +- 20% (C10)	
S-5560	" -Multi section 100 MMF(C25)	
	200 MMF(C22)	
	.002 Mfd.(C23)	
	.004 Mfd.(C26)	
	.005 Mfd.(C24)	
	" -paper, .003 Mfd. 200 V. (C17)	
	" -paper, .005 Mfd. 400 V. (C27)	
	" -paper, .01 Mfd.(disc type) (C13)	
	" -paper, .05 Mfd. 200 V. (C6)	
S-3221	" -Electrolytic 10 Mfd. 150 V. (C28)	
70463	Condenser-Variable (C8,C9,C11,C12)	
S-3529	Coil -Antenna coil (L1)	
S-5401	Coil -Oscillator coil (L2)	
	Resistor,330 ohms +- 10% ½ watt(R13)	
	" 22,000 ohms +- 10% ½ watt (R3)	
	" 100,000 ohms +- 20% ½ watt(R2,R7)	
	" 1.0 Megohm +- 20% ½ watt(R11)	
	" 3.3 Megohm +- 20% ½ watt(R4,R6, R10,R12)	
	" 6.8 Megohm +- 20% ½ watt(R5)	
	" 10.0 Megohm +- 20% ½ watt(R9)	

STOCK NO.	DESCRIPTION	LIST PRICE
	CHASSIS ASSEMBLY (Cont'd)	
73129	Transformer-1st I.F.trans.(C14,C15,L7,L8)	
73130	" -2nd I.F.trans.(C9,C20,L9,L10)	
S-5400	" -Output transformer (T1)	
S-5402	Volume Control & power switch (R8,S2,S2A)	
	SPEAKER ASSEMBLY	
S-5315	Cone-Cone & voice coil assy.	
	MISCELLANEOUS ASSEMBLY	
S-4313	Cord-Dial drive cord (standard)	
S-4246	Cable -Battery cable	
S-5398	Cabinet	
S-5399	Dial scale	
S-3870	Knobs	
70469	Pointer-Station selector pointer	
12827	Plug-"A" battery cable plug	
S-2398	Plug-"B" battery cable plug	

Only items listed under stock numbers are available as Replacement Parts.
All parts and prices subject to change or withdrawal without notice.

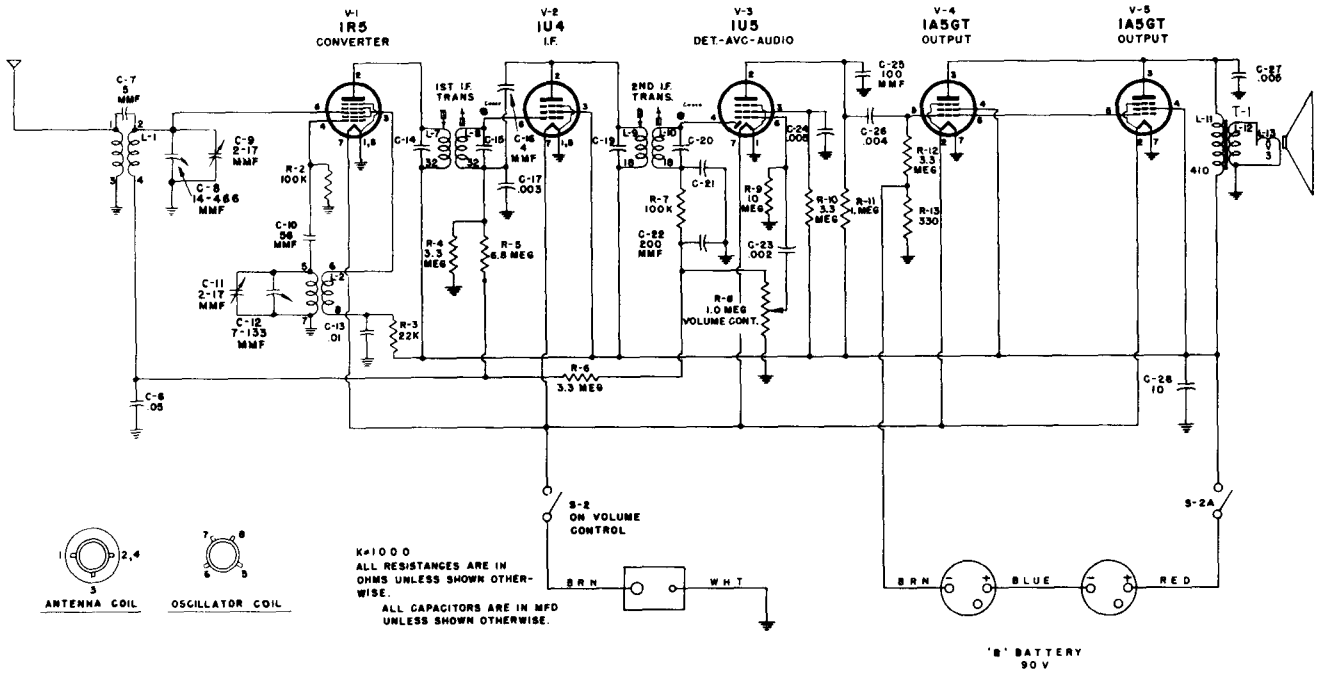

FIG. 2 — SCHEMATIC DIAGRAM

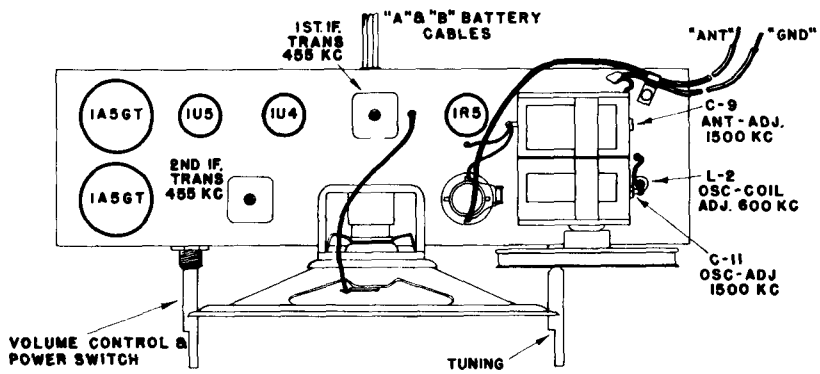

Fig 3—Chassis Layout & Alignment Adjustment

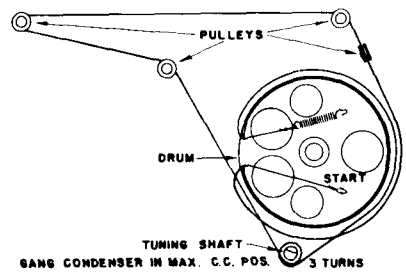

Fig. 4—Dial Cord Stringing

Alignment Chart

Order of Alignment		TEST OSCILLATOR				RECEIVER				
		Connect "HI" Side to	Connect "LO" Side to	Dummy Antenna	Frequency Setting	Range Selector	Dial Setting	Circuit to Adjust	Adjustment Symbols	Notes
I.F. ALIGN.	1	1R5 Grid Pin #6	Gnd	.1 Mfd	455 Kc	S.B.	"HI" End	1st & 2nd I.F.	L-7, L-8 L-9, L-10	Max. Out
S.B. ALIGNMENT	2	"Ant." Lead	Gnd	220 Mmf	600 Kc	S.B.	600 Kc	Osc. (Rock In)	L-2	Max. Out
	3	Same	Same	Same	1500 Kc	Same	1500 Kc	Ant.& Osc.	C-9, C-11	Same
	4	Repeat Steps 2 and 3.								

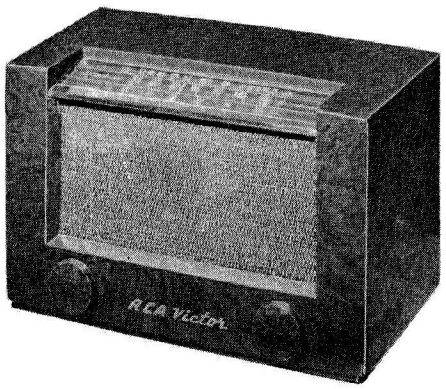

MODEL BT-504

RCA VICTOR

"HIS MASTER'S VOICE"

BATTERY RECEIVER

MODEL BT-504

SERVICE DATA

—1949 No. 27—

GENERAL SERVICE DIVISION
RCA VICTOR COMPANY LIMITED
MONTREAL, QUE.

Electrical and Mechanical Specifications

FREQUENCY RANGES

"Standard Broadcast" ----------540 kcs. to 1600 kcs.
"Short Wave 1" ----------1600 kcs. to 2900 kcs.
"Short Wave 2" ----------5.8 mcs. to 18 mcs.
Intermediate Frequency ----------455 kcs.

RADIOTRON COMPLEMENT

(1) Type-1R5 ----------First Detector—Oscillator
(2) Type-1U4 ----------Intermediate Amplifier
(3) Type-1U5 ----------Second-Detector, A.V.C., and A-F Amplifier
(4) Type-1A5GT ----------Power Output
(5) Type-1A5GT ----------Power Output

POWER OUTPUT RATING

Undistorted ----------.2 watts
Maximum ----------.38 watts

LOUDSPEAKER

Type ----------4½" P.M.
Voice-Coil Impedence ----------3.4 Ohms at 400 Cycles

CABINET DIMENSIONS

Height ----------7 inches
Width ----------11½ inches
Depth ----------6¼ inches

CURRENT CONSUMPTION

"A" at 1.4 Volts ----------250 Ma.
"B" at 90 Volts ----------12 Ma.

Batteries Required ----------One No. 758T Eveready Pack.
OR "A"—one 1.4. Volt Air Cell or 1.5 Dry Cell. "B"—two 45 Volt heavy duty "B" Batteries.

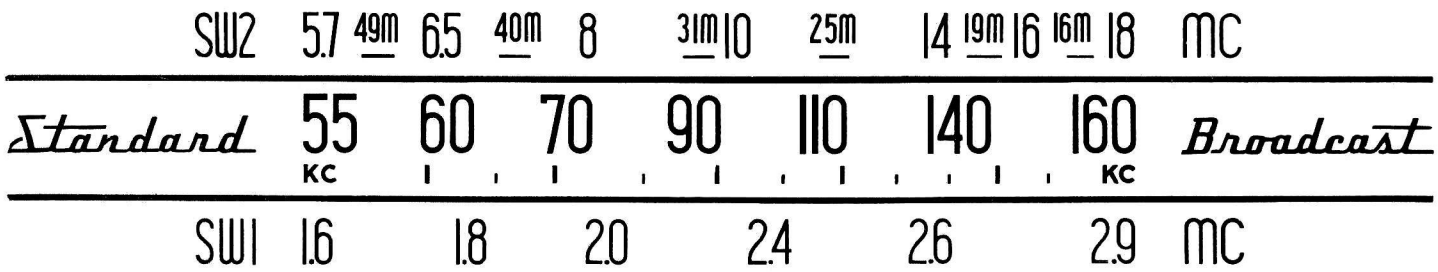

The Dial Scale drawing shown is a full size reproduction It can be used as a reference in alignment procedure.

Fig. 1—Dial Scale

REPLACEMENT PARTS FOR MODEL BT-504

Insist on Genuine Factory Tested Parts, which are readily identified and may be purchased from Authorized Dealers.

STOCK NO.	DESCRIPTION	LIST PRICE
	Chassis Assembly	
S-5561	Capacitor - trimmer 3 section 2.20 MMF. (C-3, C-9) 40-280 MMF (C-2)	
S-5128	Capacitor - Ceramic 4 MMF. (C-16)	
31871	" - Ceramic 20 MMF. + - 5%	
71924	" - " 56 MMF. + - 20% (C-7)	
73152	" - " 100 MMF. + - 20% (C-5)	
12724	" - Mica 120 MMF. + - 5% (C-8)	
S-5419	" - " 390 MMF. + - 5% (C-10)	
S-5258	" - " 3900 MMF. + - 5% (C-11)	
S-5560	" - Multi section 100 MMF. (C-25) 200 MMF. (C-22) .002 Mfd. (C-23) .004 Mfd. (C-26) .005 Mfd. (C-24)	
--	Capacitor - paper, .003 Mfd. 200 V. (C-17)	
--	" - " .005 Mfd. 400 V. (C-27)	
--	" - " .05 Mfd. 200 V. (C-18, C-29)	
S-3221	" - Electrolytic 10 Mfd. 150 V. (C-28)	
S-5367	Condenser - Variable (C-4, C-6, C-12, C-13)	
S-3695	Choke - filament choke (L-14)	
S-5368	Coil - antenna coil (L-1, L-2, L-3)	
S-5369	Coil - oscillator coil (L-4, L-5, L-6)	
--	Resistor - 330 Ohms + - 10% ½ w. (R-13)	
--	" - 15,000 ohms + - 10% ½ Watt (R-3)	
--	" - 100,000 " + - 20% ½ " (R-1, R-7)	
--	" - 1.0 Megohm + - 20% ½ " (R-2, R-11)	
--	" - 3.3 " + - 20% ½ " (R-4, R-6, R-10, R-12)	
	Chassis Assembly - Cont'd	
--	Resistor - 6.8 Megohm + - 20% ½ watt (R-5)	
--	" - 10 " + - 20% ½ " (R-9)	
S-5371	Switch - Range switch (S-1)	
73129	Transformer - 1st I.F. Trans. (L-7, L-8, C-14, C-15)	
73130	" - 2nd I.F. " (L-9, L-10, C-19, C-20, C-21)	
S-5373	" - Output transformer (T-1)	
S-5562	Volume Control & Power Switch 1.0 Meg. (R-8, S-2, S-2A)	
	Speaker Assembly	
S-5355	Cone - cone & voice coil assy	
	Miscellaneous Assemblies	
S-5559	Back Cover	
S-4313	Cord - dial drive cord (Standard)	
S-5558	Decal	
S-4246	Cable - battery cable	
S-5357	Cabinet	
S-5361	Dial Scale	
S-5366	Grille cloth	
37831	Fastener - push fasteners for cabinet back (1 set)	
S-3883	Knob - tuning - volume control	
S-5365	Knob - range switch	
S-5372	Pointer - station selector dial pointer	
12827	Plug - "A" battery cable plug	
S-2398	" - "B" battery cable plug	

Only items listed under stock numbers are available as Replacement Parts.
All parts and prices subject to change or withdrawal without notice.

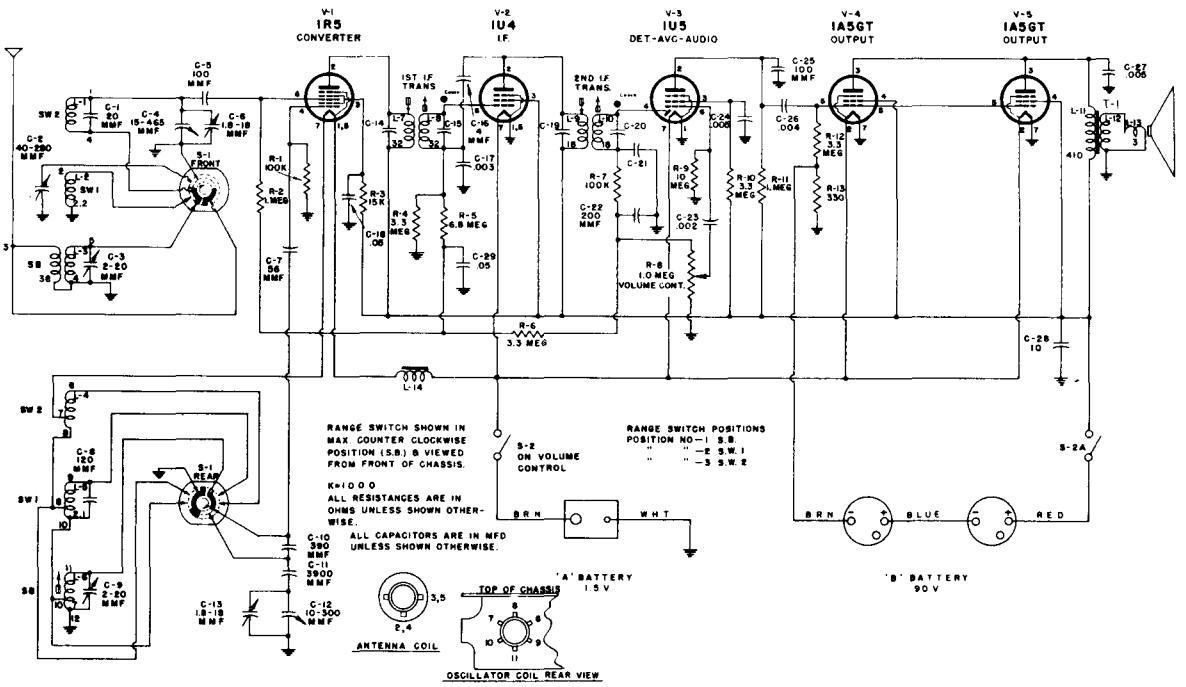

Fig. 2—Schematic Diagram

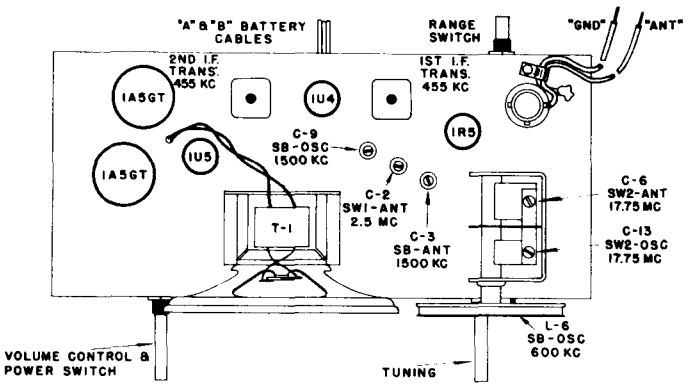

Fig. 3—Chassis Layout and Alignment Adjustment

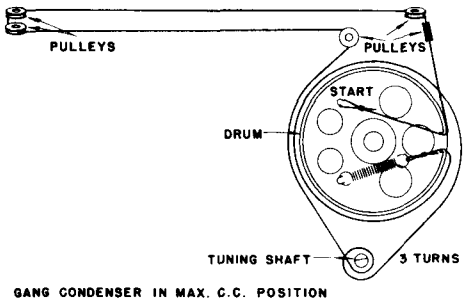

Fig. 4—Dial Cord Stringing

Alignment Chart

Order of Alignment		TEST OSCILLATOR				RECEIVER				Notes
		Connect "HI" Side to	Connect "LO" Side to	Dummy Antenna	Frequency Setting	Range Selector	Dial Setting	Circuit to Adjust	Adjustment Symbols	
I.F. ALIGN.	1	1R5 Grid Pin #6	Gnd	.1 Mfd	455 Kc	S.B.	"HI" End	1st & 2nd I.F.	L-7, L-8 L-9, L-10	Max. Out.
S.W.2 ALIGNMENT	2	"Ant." Lead	Gnd	300 Ohm	17.75 Mc	S.W.2	17.75 Mc	Osc.	C-13	Max. Out.
	3	Same	Same	Same	17.75 Mc	Same	17.75 Mc	Ant.	C-6	Same
	4	Repeat Steps 2, 3.								
S.W.1 ALIGNMENT	5	"Ant." Lead	Gnd	300 Ohm	2.44 Mc	S.W.1	2.44 Mc	Ant.	C-2	Max. Out.
S.B. ALIGNMENT	6	"Ant." Lead	Gnd	220 Mmf	600 Kc	S.B.	600 Kc	Osc.	L-6 (Rock In)	Max. Out.
	7	Same	Gnd	Same	1500 Kc	Same	1500 Kc	Osc.	C-9	Same
	8	Same	Same	Same	1500 Kc	Same	1500 Kc	Ant.	C-3	Same
	9	Repeat Steps 6, 7 and 8.								

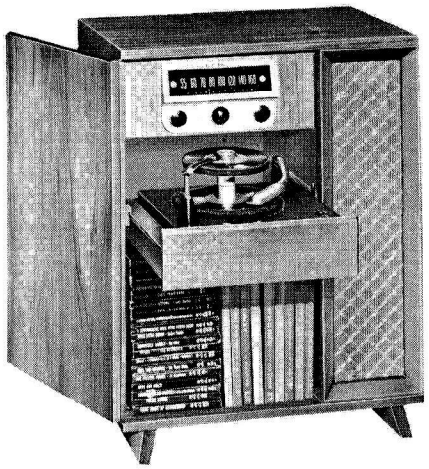

MODEL V-506

RCA VICTOR

"HIS MASTER'S VOICE"

RADIO PHONOGRAPH COMBINATION

Model V506

SERVICE DATA

— 1952 No. 9 —

HEAD OFFICE SERVICE DEPARTMENT
RCA VICTOR COMPANY, LTD
MONTREAL, QUE.

ELECTRICAL AND MECHANICAL SPECIFICATIONS

TUNING RANGE

Standard Broadcast ---------- 540-1600 KC.
I.F. ---------- 455 KC.

TUBE COMPLEMENT

1. R.C.A. 12BE6 ---------- Converter
2. R.C.A. 12BA6 ---------- I.F.
3. R.C.A. 12AV6 ---------- Audio, Det.
4. R.C.A. 35L6GT ---------- Output
5. R.C.A. 35L6GT ---------- Output
6. R.C.A. 6C4 ----------PH. Inverter

Rectifier ---------- Selenium
Tuning Ratio Drive ----------11.1 (5½ Turns)

POWER SUPPLY RATING

Rating A----105-125 Volts, 25 cycles, .55 amps., 63 watts
Rating B----105-125 Volts, 60 cycles, .55 amps., 63 watts

LOUDSPEAKER

Size and Type ----------6" x 9" P.M.
Voice Coil Impedance----------3.2 ohms at 400 cycles

POWER OUTPUT

Undistorted ----------2.8 watts
Maximum ----------4 watts

RECORD CHANGER ----------124196 Series

Turntable Speed ----------33⅓, 45 or 78 r.p.m.
Record capacity ----------Up to 14-seven inch
or 12-ten inch
or 10-twelve inch
10-ten and twelve inch intermixed

CABINET DIMENSIONS

Height ----------33½"
Width ----------25¼"
Depth ----------15½"

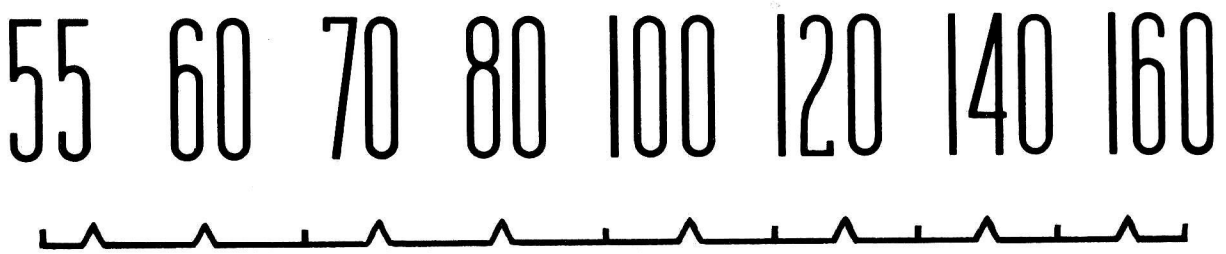

FIG. 1 DIAL SCALE V-506

The Dial Scale Drawing shown is a full size reproduction. It can be used as a reference in alignment procedure.

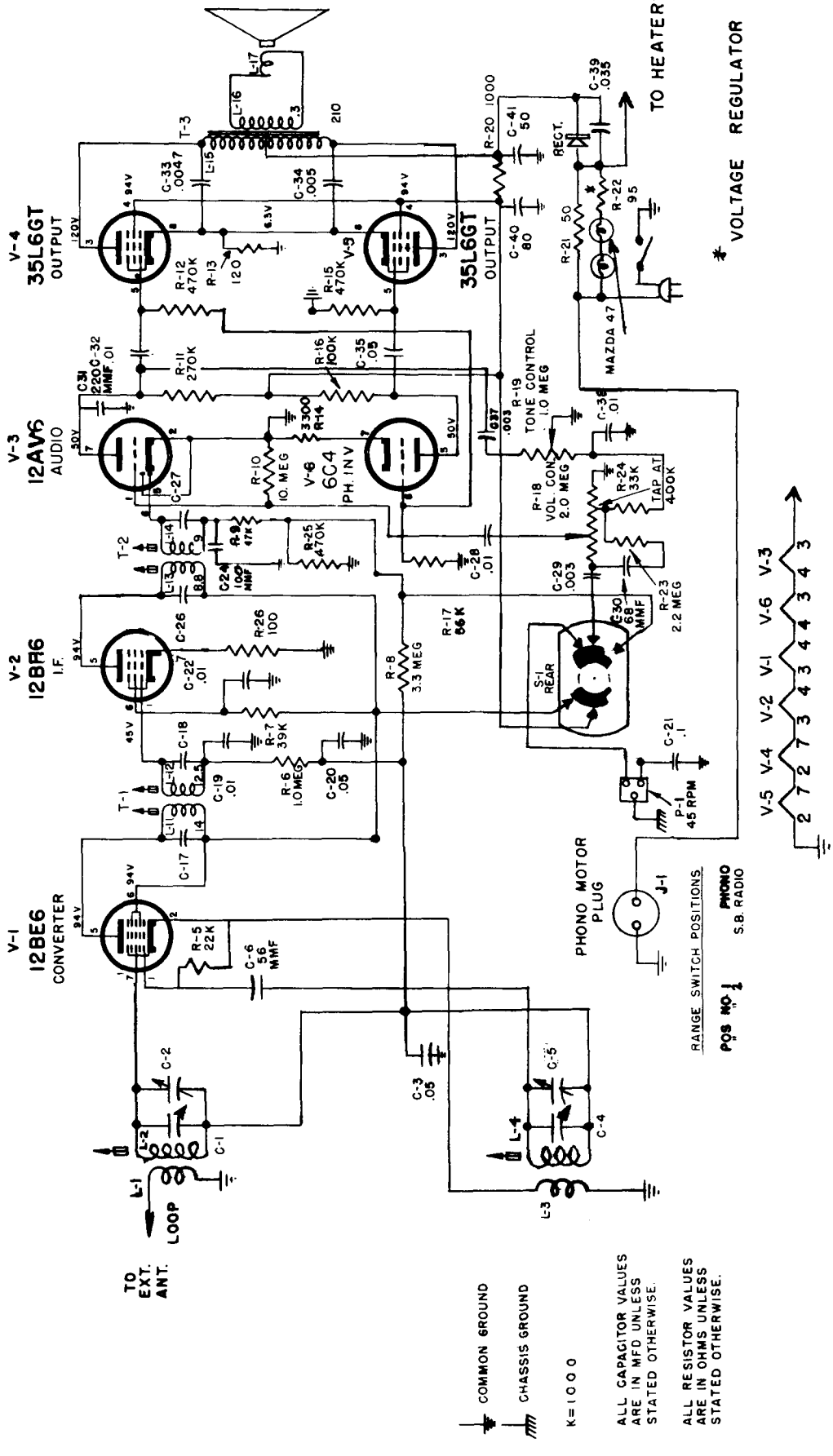

Fig. 2 Schematic Diagram

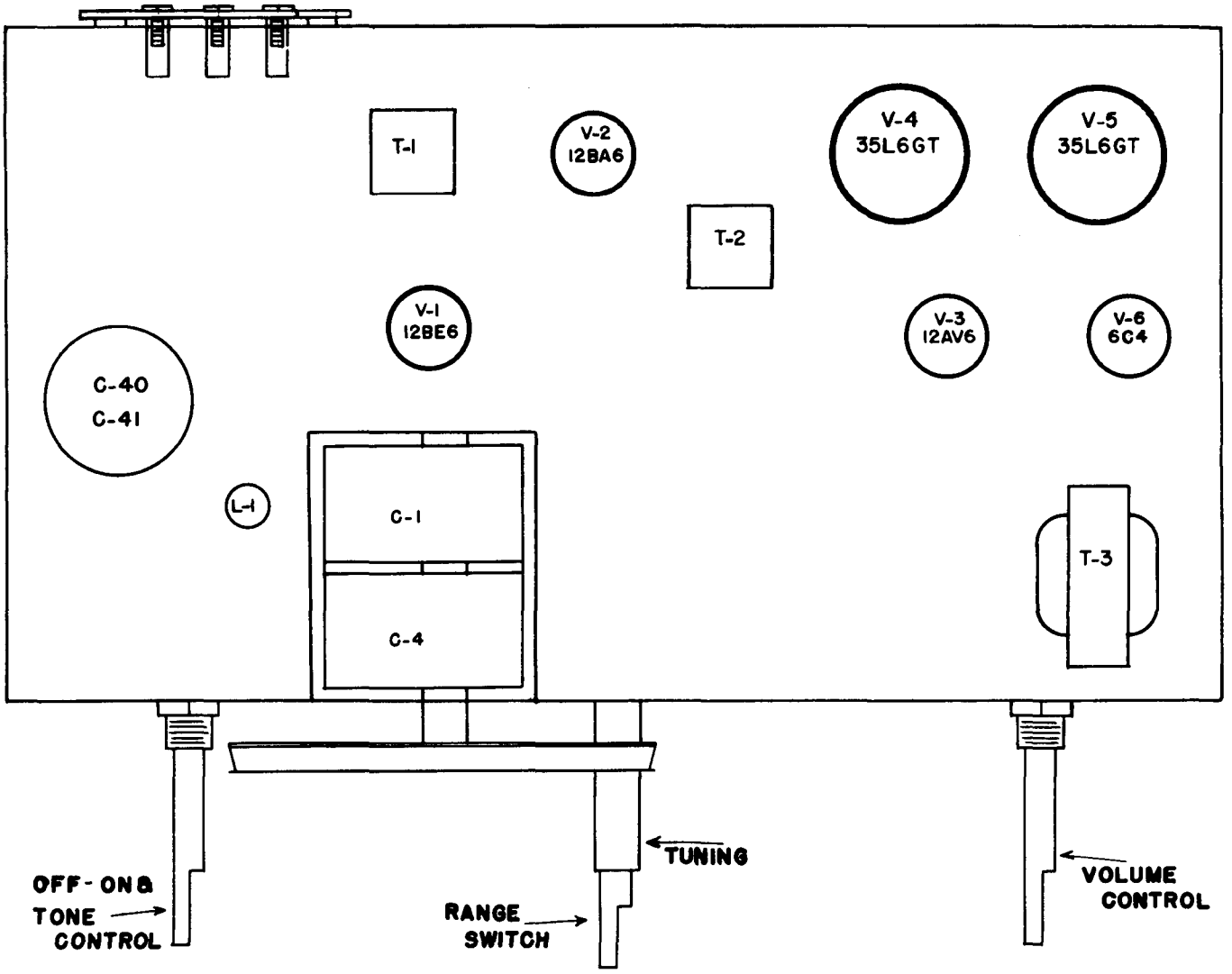

Fig. 3 Chassis Layout

ALIGNMENT PROCEDURE

Before aligning the receiver, set the gang condenser for maximum capacity and then set the dial cursor on the calibration point at the extreme left hand end of the dial.

When only a portion of the circuit is to be aligned select the required portion and perform all the remaining steps.

In order to obtain best results, it is advisable to align the 455 KC I.F.'s with the help of a cathode ray oscilloscope. The scope should be connected across the volume control. If this equipment is not available, use the method outlined below in the alignment chart.

ALIGNMENT CHART

Order of Alignment		TEST OSCILLATOR				RECEIVER				
		Connect "HI" Side To	Connect "LO" Side To	Dummy Antenna	Frequency Setting	Range Selector	Receiver Dial Setting	Circuit To Adjust	Adjustment Symbols	Notes
S.B. Alignment	1	V-2, 12BA6 Pin #1	GND Common	0.1 MFD	455KC	Radio	"HI" End	2nd I.F. Trans.	L-13, L-14	Max. Out.
	2	V-1, 12BE6 Pin #7	Same	Same	Same	Same	Same	1st. I.F.	L-11, L-12	Same
	3	Repeat steps 1 and 2.								
I.F. Alignment	4	"Ant" Lead	Chassis GND	10MMF	580 KC	Same	580 KC	S.B.-Osc,	C-5	Same
	5	Same	Same	Same	1500 KC	Same	1500 KC	S.B.-R.F.	C-2	Same
	6	Repeat Steps 4&5								

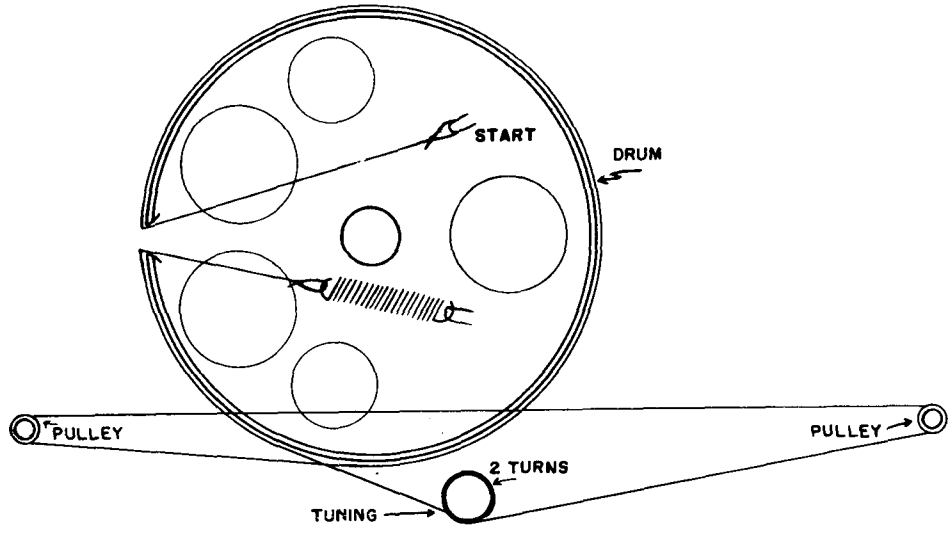

Fig. 4 Dial Cord Stringing

REPLACEMENT PARTS FOR MODEL V-506

Insist on Genuine Factory Tested Parts, which are readily identified and may be purchased from Authorized Dealers.

SYMBOL	STOCK NO.	DESCRIPTION
C-1	*Pt. of S-6748	Gang Condenser - 14-452 mmf
C-2	*Pt. of S-6748	Gang Trimmer Condenser - 2-17 mmf
C-3		Capacitor, .05 mfd 20%, 400V
C-4	*Pt. of S-6748	Gang Condenser (Osc.) -7-126 mmf
C-5	*Pt. of S-6748	Trimmer Condenser 2-17 mmf
C-6		Capacitor Ceramic, 56 mmf. 500V
C-17		Capacitor in 1st. I.F.
C-18		Capacitor in 1st. I.F.
C-19		Capacitor, .01 mfd. 10%, 200V.
C-20		Capacitor, .05 mfd. 20%, 200V.
C-21		Capacitor, .1 mfd. 10%, 400V.
C-22		Capacitor, .01 mfd. 20%, 400V.
C-24		Capacitor, 100 mmf. 20%, 500V
C-26		Capacitor in 2nd I.F. Trans.
C-27		Capacitor in 2nd I.F. Trans.
C-28		Capacitor, .01 mfd. 20% 200V.
C-29		Capacitor, .003 mfd. 20% 200V
C-31	S-5940	Capacitor, 220 mmf. 20%, 350V
C-32		Capacitor, .01 mfd. 20%, 400V
C-33		Capacitor, .0047 mfd, 10%, 600V
C-34		Capacitor, .005 mfd. 10%, 600V
C-35		Capacitor, .05 mfd. 20% 400V
C-37		Capacitor, .0033 mfd. 10%, 400V
C-38		Capacitor, .01 mfd. 10%, 400V
C-39		Capacitor, .035 mfd. 10%, 400V
C-40	S-5703	Capacitor - Electrolytic, 80 mfd. 150V
C-41	S-5703	Capacitor - Electrolytic, 50 mfd. 150V
	*S-6748	Gang Condenser & Drum
L-1 & L-2	S-6235	Coil - B.C. Ant. Coil
L-3 & L-4	S-6206	Coil - Osc. Coil
R-5		Resistor - 22,000 ohms, 20%, ½ watt
R-6		Resistor - 1.0 megohm, 20%, ½ watt
R-7		Resistor - 39,000 ohms.
R-8		Resistor - 3.3 megohm, 20%, ½ watt
R-9		Resistor - 47,000 ohms, 10%, ½ watt
R-10		Resistor - 10 megohm, 20%, ½ watt
R-11		Resistor - 270,000 ohms, ½ watt
R-12		Resistor - 470,000 ohms, 20%, ½ watt
R-13		Resistor - 120 ohms, 10%, 1 watt
R-14		Resistor - 3300 ohms, 10%, ½ watt
R-15		Resistor, 470,000 ohms, 20%, ½ watt
R-16		Resistor - 100,000 ohms, 10%, ½ watt
R-17		Resistor - 56,000 ohms, 10%, ½ watt
R-18	S-6681	Resistor - Volume Control - 2.0 meg.
R-19	S-5920	Resistor - Tone Control - 1.0 meg.
R-20		Resistor - 1000 ohms, 10%, 1 watt
R-21	S-6027	Resistor - 50 ohms, 3 watts
R-22	S-5459	Resistor 95 ohms at 38o, 13.5 ohms at 104°, 20%
R-23		Resistor - 2.2 megohm, 10%, ½ watt
R-24		Resistor - 33,000 ohms, 10%, ½ watt
R-25		Resistor - 470,000 ohms, 10%, ½ watt
R-26		Resistor - 100 ohms, 20%, ½ watt
	S-5382	Rectifier - Selenium
S-1	*S-6746	Switch - Radio - Phono
T-1	S-4949	Transformer - 1st I.F. Trans.
T-2	73037	Transformer - 2nd I.F. Trans.
T-3	*S-6745	Transformer - Output Transformer
		SPEAKER ASSEMBLY
	*S-6736	Speaker - 6" x 9" P.M.
	*S-6737	Cone & Voice Coil Assembly
		MISCELLANEOUS ASSEMBLIES
	*S-6738	Cover - Cabinet Back Cover (Wal-Mah)
	*S-6739	Cover - Cabinet Back Cover (Oak)
	S-4367	Cord - Power Cord
	S-6507	Cord - Dial Cord Assembly
	*S-6756	Decals (Trademark)
		Decale (RCA Victor)
	*S-6741	Dial - Dial Plate Assembly (includes dial)
	*S-6742	Dial lamp & socket lead assembly
	*S-6754	Escutcheon (Dial)
	*S-6743	Grille Cloth (Oak)
	*S-6747	Grille Cloth (Mah-Wal)
	*S-6744	Knob - (Tuning)
	*S-6755	Knob (Range)
	S-4631	Knob (Volume & Tone)
	S-6554	Pointer - Station Selector
	Mazda #47	Lamp - Pilot Lamps (2)
	*S-6727	Insulating Cover
	36422	Socket - Phono Socket
	*S-6749	Hinge - Door Hinge Top (Wal-Mah)
	*S-6750	Hinge - Door Hinge Bottom (Wal-Mah)
	*S-6751	Hinge - Door Hinge Top (Oak)
	*S-6752	Hinge - Door Hinge Bottom
	*S-6753	Door Pull

* INDICATES NEW STOCK ITEMS.

Only items listed under stock numbers are available as Replacement Parts.
All parts subject to change or withdrawal without notice.

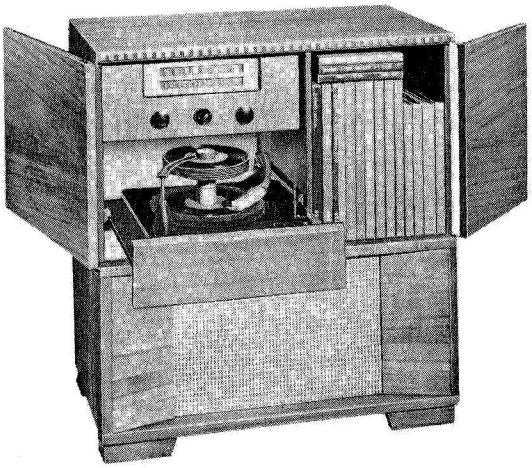

MODEL V-507

RCA VICTOR

RADIO PHONOGRAPH COMBINATION

Model V507

SERVICE DATA

— 1952 No. 4 —

HEAD OFFICE SERVICE DEPARTMENT
RCA VICTOR COMPANY, LTD
MONTREAL, QUE.

ELECTRICAL AND MECHANICAL SPECIFICATIONS

TUNING RANGE

Standard Broadcast	540-1600 KC.
Short Wave	5.8-19.6 MC.
I.F.	455 KC.

TUBE COMPLEMENT

1.	R.C.A. 6BJ6	R.F.
2.	R.C.A. 12BE6	Converter
3.	R.C.A. 12SK7	I.F. Amp.
4.	R.C.A. 12AV6	Audio, Det. A.V.C.
5.	R.C.A. 6C4	Ph. Inverter
6.	R.C.A. 35L6GT	Output
7.	R.C.A. 35L6GT	Output
Rectifier		Selenium
Dial Lamps (3)		Mazda 1813
Tuning Ratio Drive		11.1 (5½ Turns of Knob)

POWER SUPPLY RATING

Rating A ---- 105-125 Volts, 25 cycles, .55 amps. 63 watts
Rating B ---- 105-125 Volts, 60 cycles, .55 amps. 63 watts

LOUDSPEAKER

Size and Type	10" P.M.
Voice coil impedance	3.4 ohms at 400 cycles

POWER OUTPUT

Undistorted	2.5 watts
Maximum	3.5 watts

RECORD CHANGER		124196 Series
Turntable Speed		33⅓, 45 or 78 r.p.m.
Record capacity		Up to 14 seven inch
	or	12 ten inch
		10 twelve inch
	or	10 ten and twelve inch intermixed

CABINET DIMENSIONS

Height	31"
Width	29¾"
Depth	15 9/16"

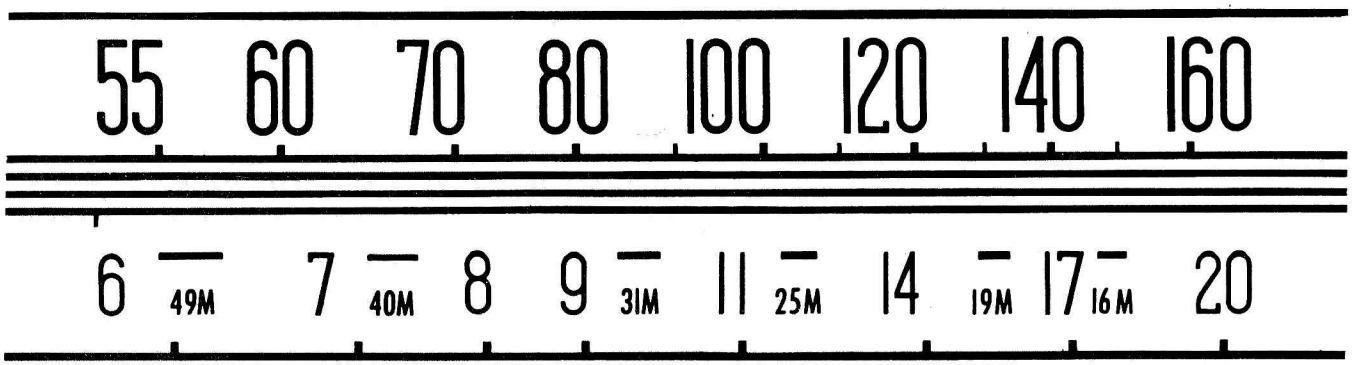

FIG. 1 DIAL SCALE V-507

The Dial Scale Drawing shown is a full size reproduction. It can be used as a reference in alignment procedure.

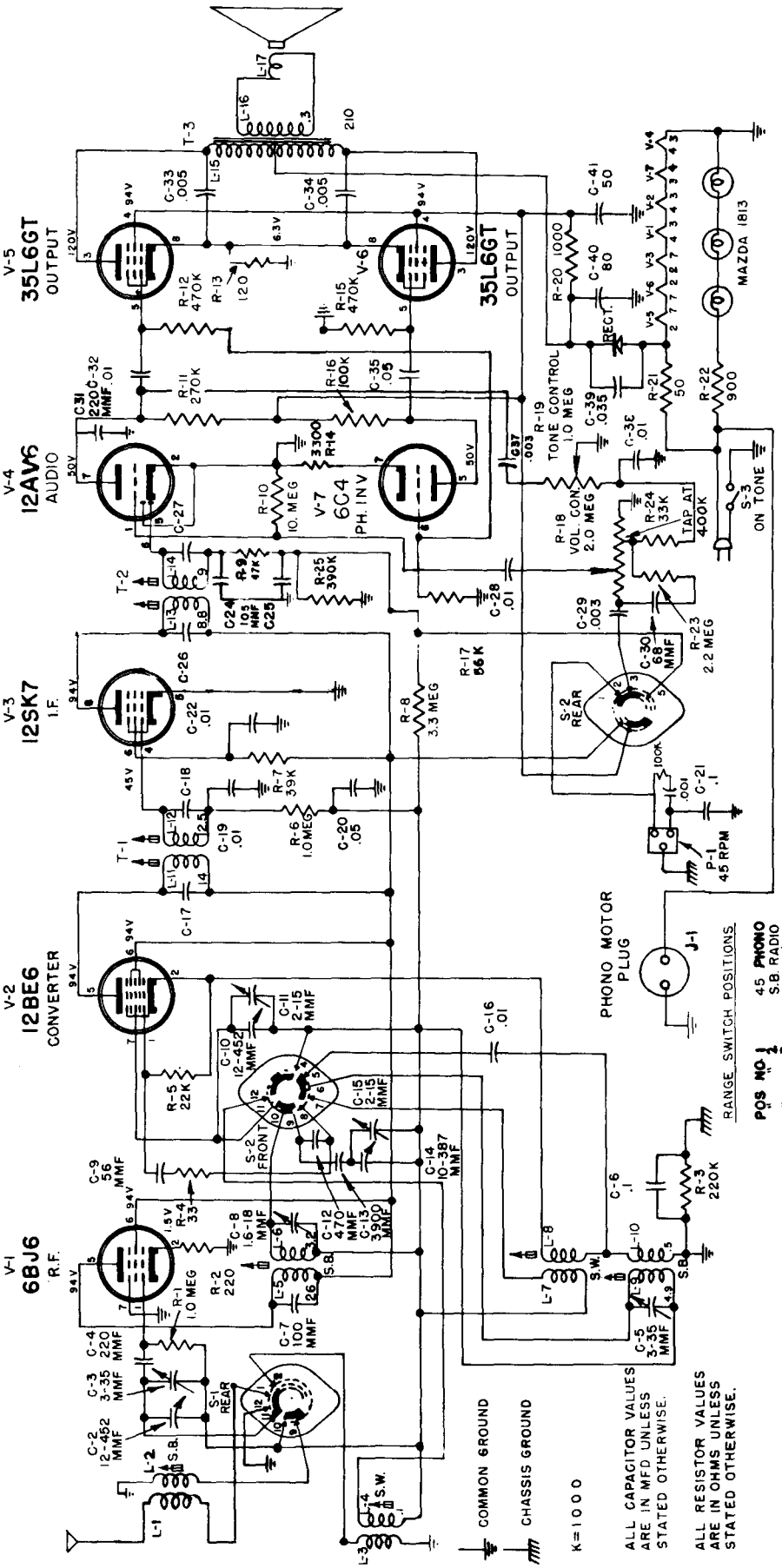

FIG. 2 SCHEMATIC DIAGRAM

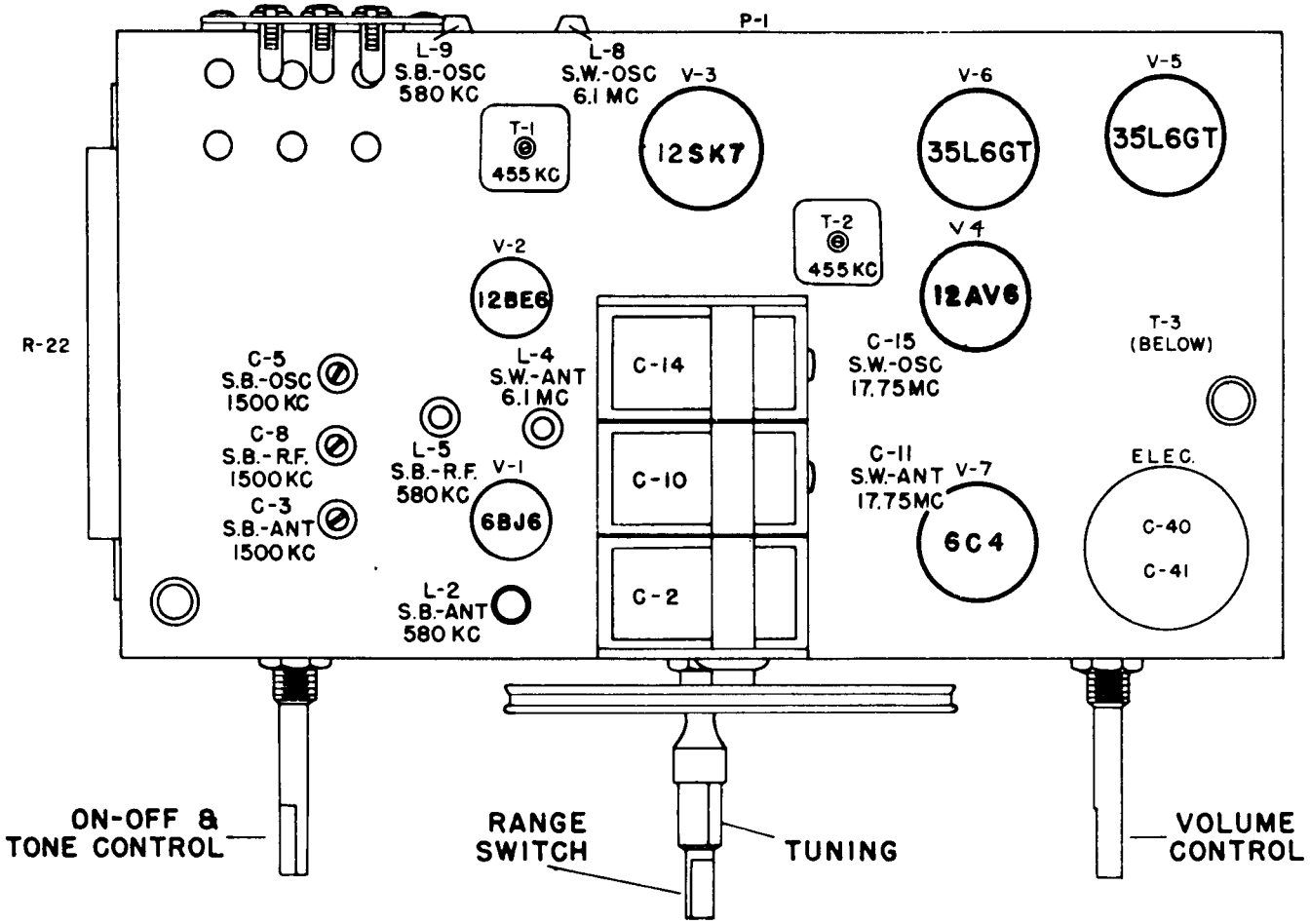

FIG. 3 CHASSIS LAYOUT AND ALIGNMENT ADJUSTMENT.

ALIGNMENT PROCEDURE

Before aligning the receiver, set the gang condenser for maximum capacity and then set the dial cursor on the calibration point at the extreme left hand end of the dial.

When only a portion of the circuit is to be aligned select the required portion and perform all the remaining steps.

In order to obtain best results, it is advisable to align the 455 KC I.F.'s with the help of a cathode ray oscilloscope. The scope should be connected across the volume control. If this equipment is not available, use the method outlined below in the alignment chart.

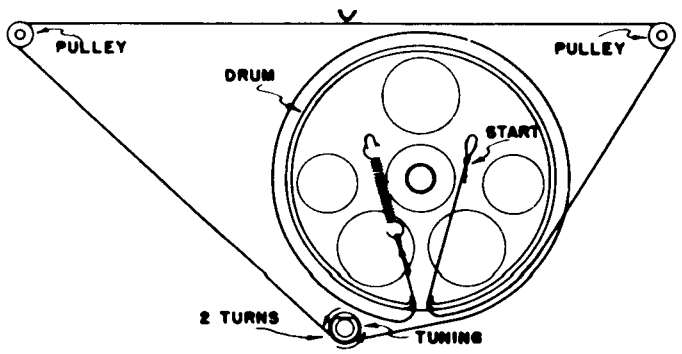

Fig. 4—Dial Cord Stringing

ALIGNMENT CHART

		TEST OSCILLATOR				RECEIVER				
		CONNECT "HI" SIDE TO	CONNECT "LO" SIDE TO	DUMMY ANTENNA	FREQUENCY SETTING	RANGE SELECTOR	DIAL SETTING	CIRCUIT TO ADJUST	ADJUSTMENT SYMBOLS	NOTES
I.F. ALIGNMENT	1	Pin #4 12SK7	Gnd.	.1 mfd	455 KC	S.B.	"HI" END	T-2 2nd I.F. Trans.	Top & Bottom Slugs	Max. Out.
	2	Pin #7 12BE6	Same	Same	Same	Same	Same	T-1 1st I.F. Trans.	Top & Bottom Slugs	Same
	3	Repeat steps 1 & 2.								
S.W. ALIGNMENT	4	Ant. Ter. BRD #1	Gnd.	300 ohms	17.75 Mc	S.W.	17.75 Mc.	Osc.	C-15	Same
	5	Same	Same	Same	17.75 Mc	Same	17.75 Mc	Ant.	C-11	Same
	6	Same	Same	Same	6.1 Mc	Same	6.1 Mc	Osc.	L-8	Same
	7	Same	Same	Same	6.1 Mc	Same	6.1 Mc	Ant.	L-4	Same
	8	Repeat steps 4 to 7.								
S.B. ALIGNMENT	9	"HI" Side of Loop	Same	10 mmf	1500 Kc	S.B.	1500 Kc	C-5 C-8 C-3	Osc. R.F. Ant.	Same
	10	Same	Same	Same	580 Kc	Same	580 Kc	L-9 L-5 L-2	Osc. R.F. Ant.	Same
	11	Repeat steps 9 to 10.								

REPLACEMENT PARTS FOR MODEL V-507

Insist on Genuine Factory Tested Parts, which are readily identified and may be purchased from Authorized Dealers.

STOCK NO.	DESCRIPTION
	CHASSIS ASSEMBLIES
S-5966	Capacitor, trimmer 3-35 MMF (C-3)
S-5965	" " dual (3-35, 1.6-18 MMF) (C-5,C-8
S-4523	Capristor, 56 MMF., 33 ohms (C-9, R-4) (C-30)
* S-6215	Capacitor, ceramic, 68 MMF. 10%, 500V. (C-7)
73152	" " 100 MMF, 20%,500V. (C-24, C-25, R-9)
S-4614	Capacitor, 2-105 MMF., 47000 ohms
S-5940	Capacitor, ceramic 220 MMF. 20%. 350 V. (C-4,C-31)(C-12)
* S-6190	Capacitor, Mica 470 MMF., 5%, 500 V. (C-13)
* S-6216	" " 3900 MMF., 5%, 500 V.
	" .003 Mfd. 20%, 200V. (C-29)
	" .005 Mfd. 10%, 600 V. (C-33, C-34) (C-19,C-28)(C-38)
	" .01 Mfd. 10%, 200 V.
	" .01 Mfd. 20%, 200 V. C-16)
	" .01 Mfd. 20%, 400 V. (C-22, C-32)
	" .035 Mfd. 10%, 400V. (C-39)
	" .05 Mfd. 20%, 200 V. (C-20)
	" .05 Mfd. 20%, 400 V. (C-35)
	" .1 Mfd. 10%, 400 V. (C-6, C-21)
S-5703	" - Electrolytic 50 - 80 Mfd. 150 V. (C-40, C-41)
* S-6235	Coil - S.B. Ant. coil (L-1, L-2)
* S-6182	" S.B. R.F. coil (L-5, L-6)
* S-6181	" - S.B. Osc. coil (L-9, L-10)
* S-6183	" - S.W. Ant. coil (L-3, L-4)
* S-6184	" - S.W. Osc. coil (L-7, L-8)
* S-6186	Condenser - Gang condenser (C-2, C-10, C-11, C-14, C-15)
38403	Control - Volume Control (R-18)
S-5920	" - Tone control (R-19)(S-3)
* S-6217	Rectifier - Selenium
	Resistor - 50 ohms + 10% & 5%
	Resistor - 120 ohms 10% 1 W. (R-13)
	" - 220 " 20% ½ W. (R-2)
* S-6236	" - 900 " 10 W. (R-22)
	" - 1,000 " 10% 1 W. (R-20)
	" - 22,000" 20% ½ W. (R-5)

STOCK NO.	DESCRIPTION
	Chassis Assembly (Cont'd)
	" - 33,000" 10% ½ W. (R-24)(R-14)
	" - 39,000" 10% ½ W. (R-7)
	" - 220,000 ohms 20% ½ W. (R-3)
	" - 270,000 " 10% ½ W. (R-11, R-16)
	" - 390,000 " 10% ½ W. (R-25)
	" - 470,000 " 10% ½ W. (R-15)
	" - 470,000 " 20% ½ W. (R-12)
	" - 1.0 Megohm 20% ½ W. (R-1, R-6)
	" - 2.2 " 10% ½ W. (R-23)
	" - 3.3 " 20% ½ W. (R-8)
	" - 10 " 20% ½ W. (R-10, R-17)
S-6555	Switch - Range switch (S-1)
S-4487	Transformer - 1st I.F. transformer (T-1)
* S-6192	" - 2nd I.F. " (T-2)
* S-6187	" - Output " (T-3)
	SPEAKER ASSEMBLY
S-5813	Speaker 10"
S-5929	Cone - Cone & voice coil assy (L-17)
	MISCELLANEOUS ASSEMBLIES
S-6551	Back - cabinet back (wal-mah.)
S-6552	" - " " (blonde)
S-6290	Decalcommanias
S-5558	Monogram (RCA Victor)
S-4313	Dial Cord
S-4646	Dial clamps
* S-6193	Dial Scale
* S-6180	Dial Plate Assy
* S-6248	Door Pulls
* S-6239	Door Pulls
S-6679	Grille Cloth (Wal.-Mah.)
S-6680	" " (blonde)
S-5275	Knob Assy. (Mah.) (Tuning)
S-4390	" " (Wal.) "
S-5276	" " (Blonde) "
S-5277	" " (Mah.) (Range)
S-4387	" " (Wal.) "
S-5278	" " (Blonde) "
S-5279	" " (Mah.) Vol. & Tone
S-3870	" " (Wal.) " "
S-5280	" " (Blonde) " "
	Lamps - dial & pilot lamps (3)
S-6554	Pointer - dial pointer

* INDICATES NEW STOCK ITEMS

Only items listed under stock numbers are available as Replacement Parts.
All parts and prices subject to change or withdrawal without notice.

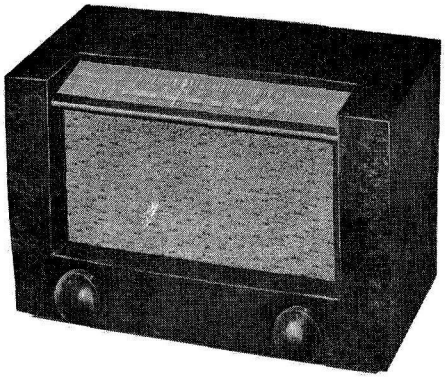

RCA VICTOR

"HIS MASTER'S VOICE"

AC-DC RADIO RECEIVER

MODEL 521D

SERVICE DATA

—1949 No. 21—

GENERAL SERVICE DIVISION
RCA VICTOR COMPANY LIMITED
MONTREAL, QUE.

Electrical and Mechanical Specifications

FREQUENCY RANGES

Standard Broadcast ("A" Band) ----------540-1,680 kc.

Short Wave ("C" Band) ----------4.7-18 mc.

INTERMEDIATE FREQUENCY ----------455 kc.

TUBE COMPLEMENT

(1) RCA-12SA7 ----------1st Detector-Oscillator
(2) RCA-12SK7 ----------IF Amplifier
(3) RCA-12SQ7--2nd Detector, A.V.C. and A-F Amplifier
(4) RCA-35L6GT ----------Output
(5) RCA-35Z5GT ----------Rectifier

POWER SUPPLY POLARITY—For operation on d-c, the power plug must be inserted in the outlet for correct polarity.

POWER SUPPLY RATINGS (D-C or 25/60 cycles A-C)

105-125 volts ----------30 watts

POWER OUTPUT RATING

Undistorted ----------1.0 watt
Maximum ----------1.5 watts

LOUDSPEAKER

Type ----------5-inch Permanent-Magnet Dynamic
Voice Coil Impedance ----------3.2 ohms at 400 cycles
Tuning Drive Ratio----------18 to 1 (9 turns of knob)

CABINET DIMENSIONS

Width 11⅜"—Height 6 15/16"—Depth 6¼"

If the set does not function, reverse the plug. On a-c, reversal of the plug may reduce hum.

REPLACEMENT PARTS FOR MODEL 521D

Insist on Genuine Factory Tested Parts, which are readily identified and may be purchased from Authorized Dealers.

STOCK NO.	DESCRIPTION	LIST PRICE
	Chassis Assemblies	
S-5258	Capacitor - Mica trimmer, 1.6 - 18 MMF. (C-10)	
71924	" - Ceramic, 56 MMF. (C-6)	
39636	" - Mica, 220 MMF. (C-2,C-22)	
39643	" - Mica, 430 MMF. (C-9)	
	" - Tubular, molded paper .0047 Mfd. (C-1, C-19, C-21)	
	" - Tubular, molded paper .027 Mfd. (C-24)	
	" - Tubular, molded paper .033 Mfd. 400 V. (C-13, C-25)	
	" - Tubular, molded paper, .047 Mfd. 400 V. (C-11, C-14)	
	" - Tubular, molded paper .1 Mfd. 400 V. (C-5)	
70371	" - Electrolytic, 3 sections 50 Mfd. 150 V. (C-23A) 30 Mfd. 150 V. (C-23B) 20 Mfd. 20 V. (C-23C)	
S-5251	" - Gang condenser (C-3, C-4, C-7, C-8)	
S-5254	Coil - antenna coil (L-1, L-2, L-3, L-4, L-5)	
S-5253	" - oscillator coil (L-6, L-7)	
73268	" - peaking coil (L-8, R-14)	
S-5255	Control - volume control & power switch (R6,S2)	
70365	Core - adjustable core & stud for oscillator coil	
	Resistor - 33 ohms + - 10%, 1 watt (R-10)	
73263	" - 68 " w.w. 2 watts (R-9)	
	" - 120 " + - 10% ½ watt (R-12)	
	" - 1200 ohms + - 10% 1 watt (R-13)	
	" - 33,000 ohms + - 10% ½ watt (R-3)	
	" - 47,000 " + - 20% ½ " (R-5)	
	" - 330,000 " + - 20% ½ " (R-1)	
	" - 470,000 " + - 20% ½ " (R-8,R-11)	
	" - 2.2 Megohms + - 20% ½ watt (R-2)	
	" - 3.3 " + - 20% ½ " (R-4)	
	" - 4.7 " + - 10% ½ " (R-7)	
S-5256	Switch, range switch (S-1)	
S-4487	Transformer - First I.F. transformer (T-1)	
S-4488	" - Second I.F. transformer (T-2)	
S-5252	" - Output transformer (T-3)	
	Speaker Assemblies	
S-5260	Cone & voice coil assembly	
	Miscellaneous Assemblies	
73272	Back - cabinet back	
S-5259	Button - plug button (Pkg. 2)	
S-5249	Cabinet - brown plastic cabinet	
S-4313	Cord - drive cord (Standard)	
S-5250	Dial - Glass, dial scale	
S-4500	Emblem - RCA Victor	
37831	Fastener - push fasteners for cabinet back (1 set)	
35121	Knob - range switch knob	
S-4507	Knob - volume control or tuning knob	
73274	Moulding - dial moulding	
S-5257	Pointer - station selector pointer	

Only items listed under stock numbers are available as Replacement Parts.

All parts and prices subject to change or withdrawal without notice.

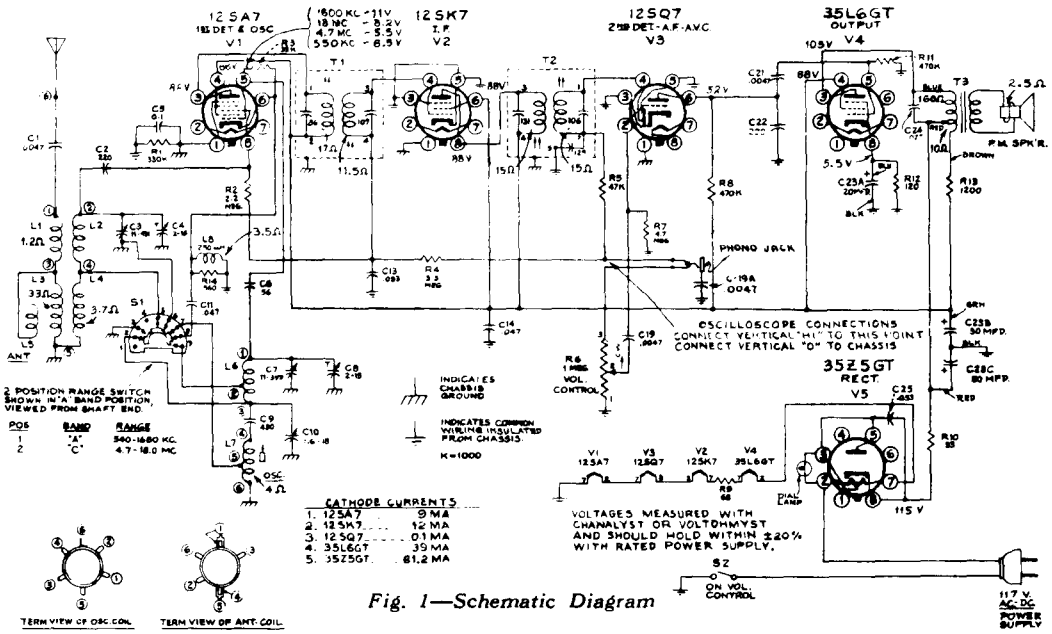

Fig. 1—Schematic Diagram

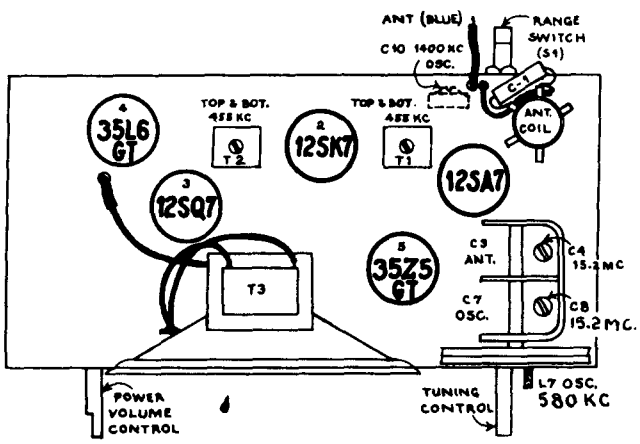

Fig. 2—Chassis Layout and Alignment Adjustment

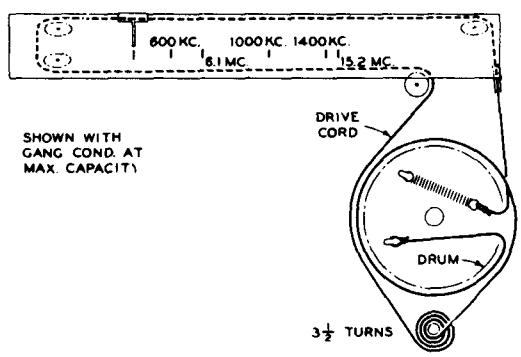

Fig. 3—Dial Cord Stringing

Critical Lead Dress

1. Dress output plate capacitor C-24 and output transformer leads down next to chassis.
2. Dress green lead from terminal board to volume control down to chassis and away from adjacent parts.
3. Keep grid end of R2 as short as possible.
4. Keep body of C2 away from chassis.
5. Dress R7 and C19 down next to chassis.
6. Twist power cord leads underneath chassis.
7. Dress R9 against back apron of chassis.
8. Dress dial lamp leads between speaker and dial back plate bracket.
9. Dress C1 away from antenna coil winding.
10. Dress output transformer secondary leads away from dial drive cord.

Alignment Procedure

Before aligning the receiver, set the gang condenser for maximum capacity and then set the dial cursor on the calibration point at the extreme left hand end of the dial.

When only a portion of the circuit is to be aligned select the required portion and perform all the remaining steps.

In order to obtain best results, it is advisable to align the 455 KC I.F.'s with the help of a cathode ray oscilloscope. The scope should be connected across the volume control. If this equipment is not available, use the method outlined below in the alignment chart.

NOTE: If the test-oscillator is a-c operated, it may be necessary to use an isolation transformer (117 v./117 v.) for the receiver during alignment.

Alignment Chart

Order of Alignment		TEST OSCILLATOR				RECEIVER				
		Connect "HI" Side To	Connect "LO" Side To	Dummy Antenna	Frequency Setting	Range Selector	Receiver Dial Setting	Circuit To Adjust	Adjustment Symbols	Notes
I.F. ALIGNMENT	1	12SK7 I.F. Pin #4	Gnd.	.01 Mfd	455 KC	S.B.	"HI" End	2nd I.F. Trans.	Top & bottom cores	Max. Out.
	2	12SA7 Conv. Pin #8	Same	Same	Same	Same	Same	1st I.F. Trans.	Top & Bottom cores	Same
S.W. ALIGNMENT	3	'Ant.' Lead	Same	300 ohms	15.2 Mc	S.W.	15.2 Mc	Osc. Ant.	C-8 C-4	Same
	4	Repeat Step 3.								
S.B. ALIGNMENT	5	Same	Same	47 Mmf	580 Kc	S.B.	580 Kc	Osc.	L-7 (Rock In)	Same
	6	Same	Same	1500 Kc	1500 Kc	S.B.	1500 Kc	Osc.	C-10 (Rock In)	Same
	7	Repeat Steps 5 & 6.								

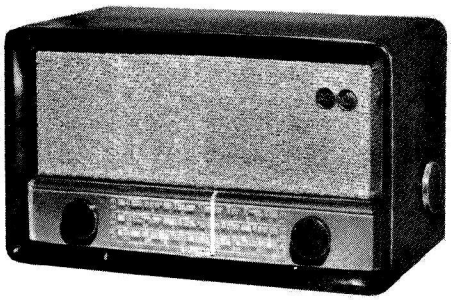

MODELS 531D AND 531F

RCA VICTOR

"HIS MASTER'S VOICE"

AC-DC RADIO RECEIVERS

MODELS 531D & 531F

SERVICE DATA

— 1949 NO. 20 —

GENERAL SERVICE DIVISION
RCA VICTOR COMPANY LIMITED
MONTREAL, QUE.

Electrical and Mechanical Specifications

Frequency Ranges (531D only.)

Standard Broadcast ("A" band) ----------540-1600 KC.
Medium Wave ("B" band) ----------2.3-7. MC.
Short Wave ("C" band) ----------7-22 MC.

Frequency Ranges (531F only.)

Standard Broadcast ("A" band) ----------535-1680 KC
Medium Wave ("B" band) ----------2.05-6.5 MC
Short Wave ("C" band) ----------7-22 MC
Intermediate Frequency ----------455 KC.

Tube Complement

(1) RCA 12SA7 ----------Converter
(2) RCA 12SK7 ----------I.F. amplifier
(3) RCA 12SQ7 ----------2nd Det., A.V.C. and audio
(4) RCA 35L6GT ----------Output
(5) RCA 35Z5GT ----------Rectifier

Dial Lamps (2) ---------Mazda No. 1490, 3.4 volts .16 amps.

Power Supply Ratings

105-125 volts D.C. or 25-60 cycles A.C. .3 amps. 30 watts.

Power Output

Undistorted ----------1.0 watt
Maximum ----------1.5 watts

Loudspeaker

Type ----------4" x 6" P.M. dynamic
Voice coil impedance ----------3.2 ohms at 400 cycles.

Cabinet Dimension

Height ----------7-15/16 ins.
Width ----------14-9/16 ins.
Depth ----------7¾ ins.

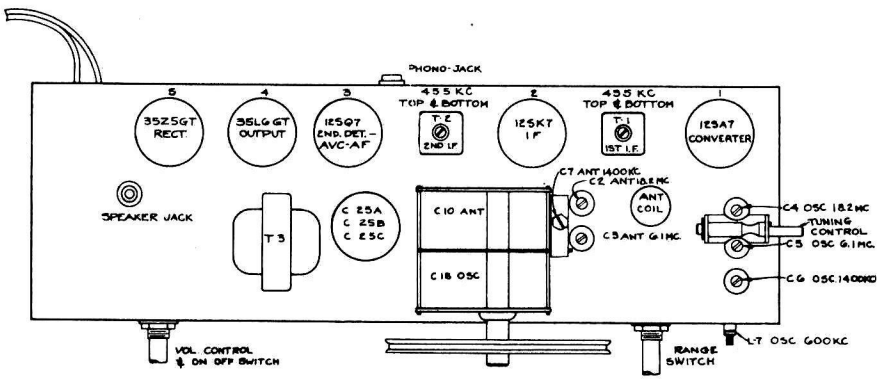

FIG. 1—CHASSIS LAYOUT AND ALIGNMENT ADJUSTMENTS

Phonograph Attachment

A jack is provided on the rear of the chassis for connecting a phonograph attachment. (Note: the socket on top of chassis is for speaker.) The output cable of the attachment should be terminated in a Stock No. 31048 plug. It must be removed for radio reception.

Power Supply Polarity—For operation o.1 D.C. the power plug must be inserted in the outlet for correct polarity. If the set does not function, reverse the plug. On A.C. reversal of the plug may reduce hum.

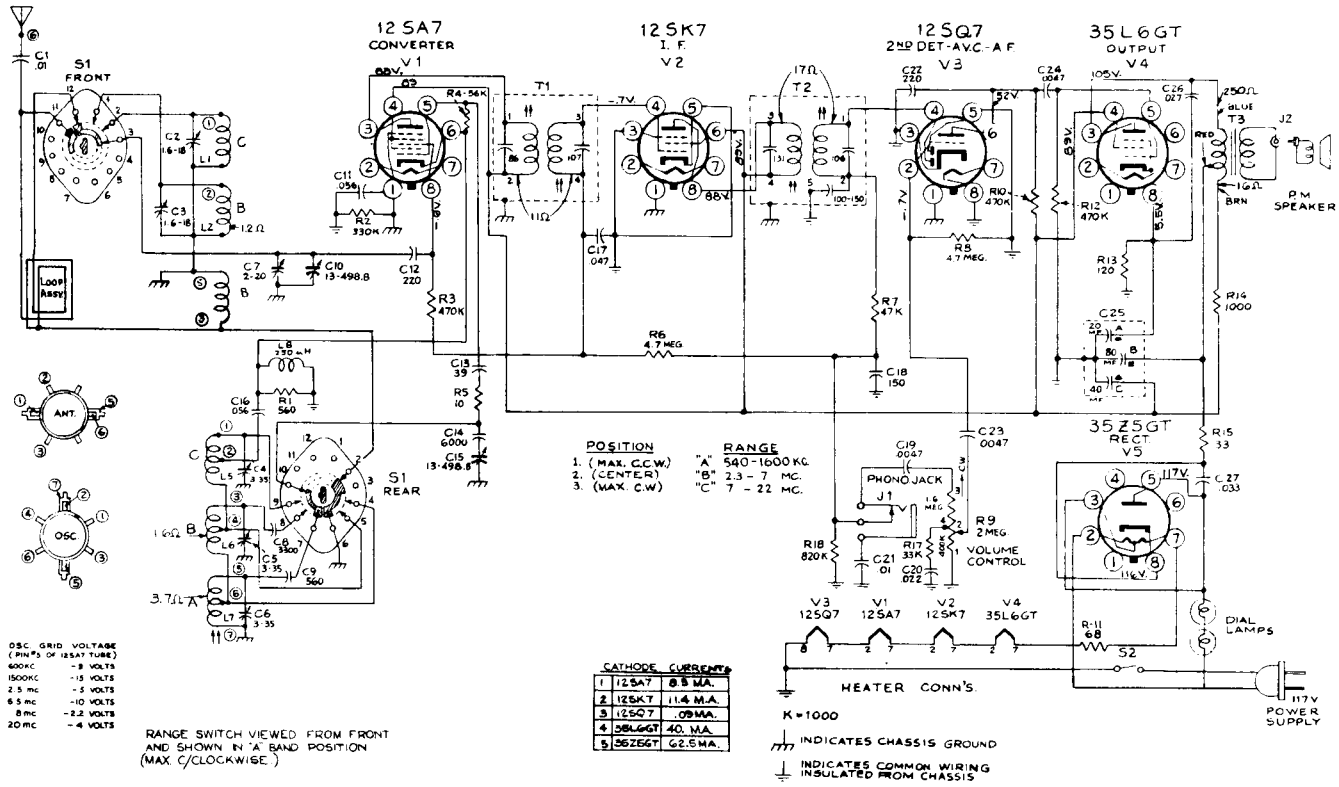

FIG. 2—SCHEMATIC DIAGRAM (531D)

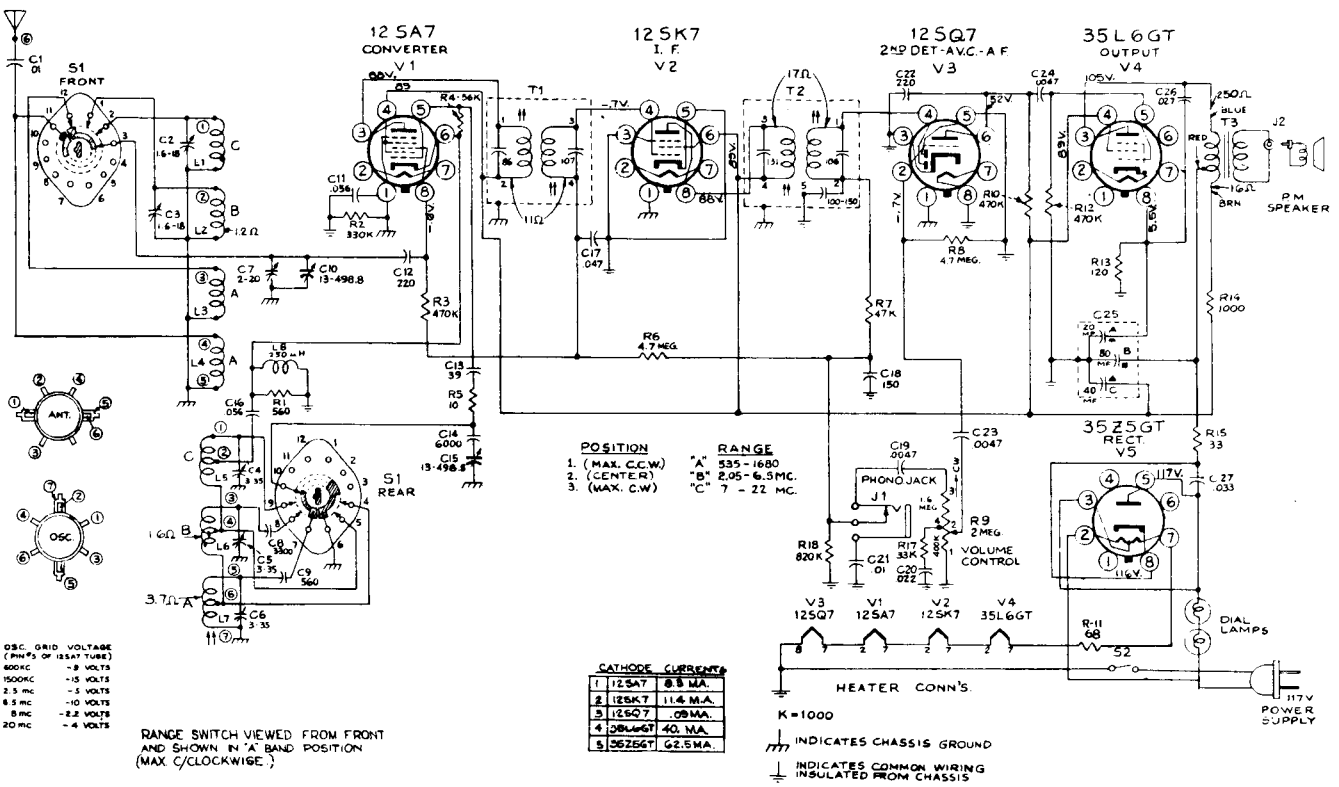

FIG. 3—SCHEMATIC DIAGRAM (531F)

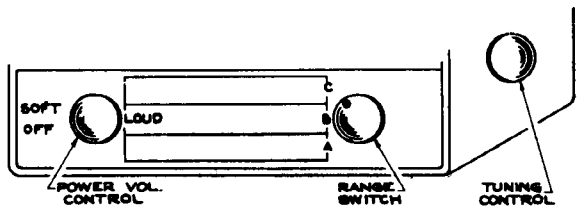

FIG. 4—LOCATION OF CONTROLS

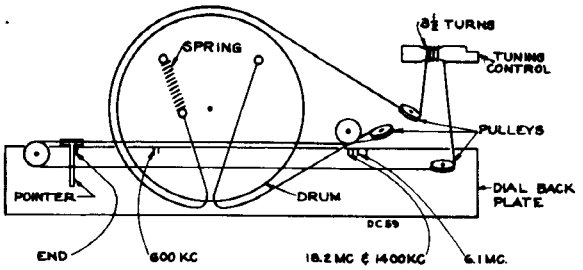

FIG. 5—DIAL CORD STRINGING

Critical Lead Dress

1. Dress blue lead of output transformer close to chassis.
2. Dress C1 away from antenna coil winding.
3. Keep body of C12 away from chassis base.
4. Keep green wire from phono jack to terminal board taut and away from blue lead of output transformer.
5. Dress R11 against back apron of chassis.
6. Keep C23 away from blue lead of output transformer.
7. Dress C19 close to chassis base.

Alignment Procedure

Before aligning the receiver, set the gang condenser for maximum capacity and then set the dial cursor on the calibration point at the extreme left hand end of the dial. The dial scale may be readily removed from the cabinet and used as a reference during alignment.

When only a portion of the circuit is to be aligned select the required portion and perform all the remaining steps.

In order to obtain best results, it is advisable to align the 455 KC I.F.'s with the help of a cathode ray oscilloscope. The scope should be connected across the volume control. If this equipment is not available, use the method outlined below in the alignment chart.

ALIGNMENT CHART

Order of Alignment		TEST OSCILLATOR				RECEIVER				
		Connect "HI" Side To	Connect "LO" Side To	Dummy Antenna	Frequency Setting	Range Selector	Receiver Dial Setting	Circuit to Adjust	Adjustment Symbols	Notes
I.F. Alignment	1	12SK7 Grid Pin #8	GND	.01 MFD.	455 KC	'A' Band	'HI' End	2nd I.F. Trans.	T-2	Max. Out.
	2	12SA7 Grid Pin #8	Same	Same	Same	Same	Same	1st I.F. Trans.	T-1 *	Same
"A" Band Alignment	3	Ant. Lead	Same	200 MMF	1400 KC	Same	1400 KC	Osc.	C-6	Same
	4	Same	Same	Same	Same	Same	Same	Ant.	C-7	Same
	5	Same	Same	Same	600 KC	Same	600 KC	Osc.	L-7	Same
	6	Repeat Steps 3,4 & 5.								
"B" Band Alignment	7	Ant. Lead	GND	300 Ohms	6.1 MC	'B' Band	6.1 MC	Osc.	C-5 †	Same
	8	Same	GND	Same	Same	Same	Same	Ant.	C-3 ‡	Same
	9	Repeat Steps 7 & 8.								
"C" Band Alignment	10	Ant. Lead	GND	300 Ohms	18.2 MC	'C' Band	18.2 MC	Osc.	C-4 †	Same
	11	Same	Same	Same	Same	Same	Same	Ant.	C-2 ‡	Same
	12	Repeat Steps 10 & 11.								

* Do not Re-Adjust T-2

† Use minimum capacity peak if two peaks can be obtained.

‡ Rock Gang.

REPLACEMENT PARTS FOR MODELS 531D & 531F

Insist on genuine factory tested parts, which are readily identified and may be purchased from authorized dealers.

Stock No.	Description	List Price
	Chassis Assembly	
S-4450	" - trimmer dual 1.6-18 MMF. (C-2,C-3)	
S-4451	" - " triple 3-35 MMF. (C-4,C-5,C-6)	
S-4438	Capacitor - 150 MMF ceramic (C-18)	
S-4439	" - 220 MMF. mica (C-12, C-22)	
S-4440	" - 560 MMF. " (C-9)	
S-4441	" - 3,300 " " (C-8)	
S-4442	" - 6,000 " " (C-14)	
--	" - .0047 Mfd. " (C-19,C-23,C-24)	
--	" - .01 " " (C-1, C-21)	
--	" - .022 " (C-20)	
--	" - .027 " (-26)	
--	" - .035 " (C-27)	
--	" - .047 " (C-17)	
--	" - .056 " (C-11, C-16)	
S-4452	" - electrolytic 80-40-20 Mfd. (C-25A, C-25B, C-25C)	
S-4453	" - Resistor assy. (39 MMF. -10 ohm) (C-13, R-5)	
S-5239	Coil - antenna coil (5Q31F)(L-1,L-2,L-3,L-4)	
S-5210	" - " " (5Q31D)(L-1,L-2)	
S-5240	" - oscillator coil (5Q31F)(L-5,L-6,L-7)	
S-4457	" - peaking coil & resistor assy. (250 MH coil & 560 ohm resistor)(L-8,R-1)	
S-4461	Condenser - variable (C-10, C-15, C-7)	
S-4504	Indicator - station selector pointer	
--	Resistor 33 ohms, 1 watt (R-15)	
--	" 68 " 2 watt (R-11)	
--	" 120 " ½ " (R-13)	
--	" 1,000 " 1 " (R-14)	
--	" 33,000 " ½ " (R-17)	
--	" 47,000 " ½ " (R-7)	
--	" 56,000 " ½ " (R-4)	
--	" 330,000 " ½ " (R-2)	
--	Resistor 470,000 ohms, ½ watt (R-3,R-10,R-12)	
--	" 820,000 " ½ " (R-18)	
--	" 4.7 Megohms ½ " (R-6, R-8)	

Stock No.	Description	List Price
	Chassis Assembly (Cont'd)	
S-5242	Switch - range switch (5Q31D)(S-1)	
S-4486	Switch - range switch (5Q31F)(S-1)	
S-4487	Transformer - 1st I.F. (T-1)	
S-4488	" - 2nd I.F. (T-2)	
S-4462	Volume Control - 2 Megohm (R-9)(S-2)	
	Speaker Assembly	
S-5247	Cone - cone & voice coil assy	
S-4489	Output transformer (T-3)	
S-4491	Plug - male plug for speaker cable (J-2)	
	Miscellaneous Assembly	
S-5243	Back - back cover & loop assembly (5Q31D)	
S-5244	Back - back cover for cabinet (5Q31F)	
S-4494	Baffle board & grille cloth	
S-4495	Cabinet - plastic cabinet	
S-4496	Clip - dial scale clip (Pkg. 3)	
S-4497	Cloth - grille cloth (6" x 14")	
S-4313	Cord - dial cord	
S-4460	" - power cord	
S-5245	Dial Scale (5Q31D)	
S-5246	Dial Scale (5Q31F)	
S-4500	Emblem (RCA Victor)	
S-4501	Fastener - push fastener for back cover (Pkg. 4)	
S-4465	Jack - phono input jack	
S-4505	Knob - range switch	
S-4506	" - tuning	
S-4507	" - vol. control	
--	Lamp - dial lamp (Mazda # 1490)	
S-4490	Washer "C" washer for tuning shaft (Pkg. 3)	

Only items listed under stock numbers are available as Replacement Parts.

All parts and prices subject to change or withdrawal without notice.

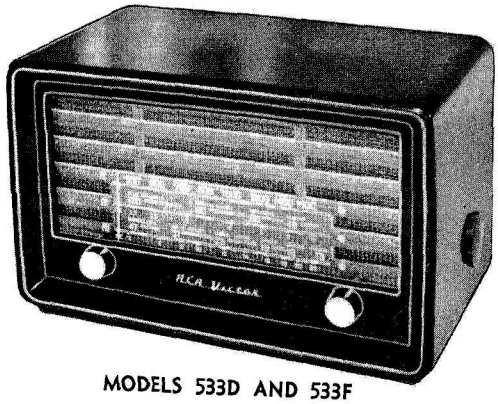

MODELS 533D AND 533F

RCA VICTOR

AC-DC RADIO RECEIVERS

Models 533D & 533F

SERVICE DATA

— 1951 NO. 10 —

GENERAL SERVICE DIVISION
RCA VICTOR COMPANY, LTD.
MONTREAL, QUE.

Electrical and Mechanical Specifications

Frequency Ranges (533D only.)

Standard Broadcast ("A" band) ----------540-1600 KC.
Medium Wave ("B" band) ----------2.3-7. MC.
Short Wave ("C" band) ----------7-22 MC.

Frequency Ranges (533F only.)

Standard Broadcast ("A" band) ----------535-1680 KC
Medium Wave ("B" band) ----------2.05-6.5 MC
Short Wave ("C" band) ----------7-22 MC
Intermediate Frequency ----------455 KC.

Tube Complement

(1) RCA 12SA7 ----------Converter
(2) RCA 12SK7 ----------I.F. amplifier
(3) RCA 12SQ7 ----------2nd Det., A.V.C. and audio
(4) RCA 50L6GT ---------- Output
(5) RCA 35Z5GT ----------Rectifier

Dial Lamps (2) ---------Mazda No. 1490, 3.4 volts .16 amps.

Power Supply Ratings

105-125 volts D.C. or 25-60 cycles A.C. .3 amps. 30 watts.

Power Output

Undistorted ---------- 1.2 watt
Maximum ---------- 2.0 watts

Loudspeaker

Type ---------- 6" P.M. dynamic
Voice coil impedance ----------3.2 ohms at 400 cycles.

Cabinet Dimension

Height ----------7-15/16 ins.
Width ----------14-9/16 ins.
Depth ----------7¾ ins.

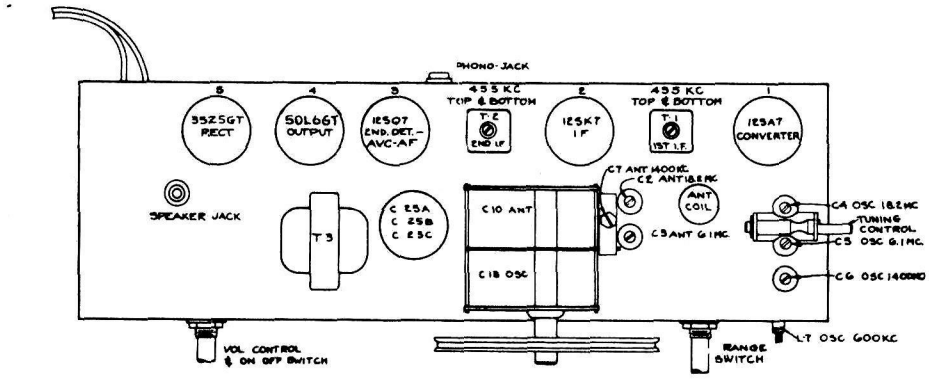

FIG. 1—CHASSIS LAYOUT AND ALIGNMENT ADJUSTMENTS

Phonograph Attachment

A jack is provided on the rear of the chassis for connecting a phonograph attachment. (Note: the socket on top of chassis is for speaker.) The output cable of the attachment should be terminated in a Stock No. 31048 plug. It must be removed for radio reception.

Power Supply Polarity—For operation on D.C. the power plug must be inserted in the outlet for correct polarity. If the set does not function, reverse the plug. On A.C. reversal of the plug may reduce hum.

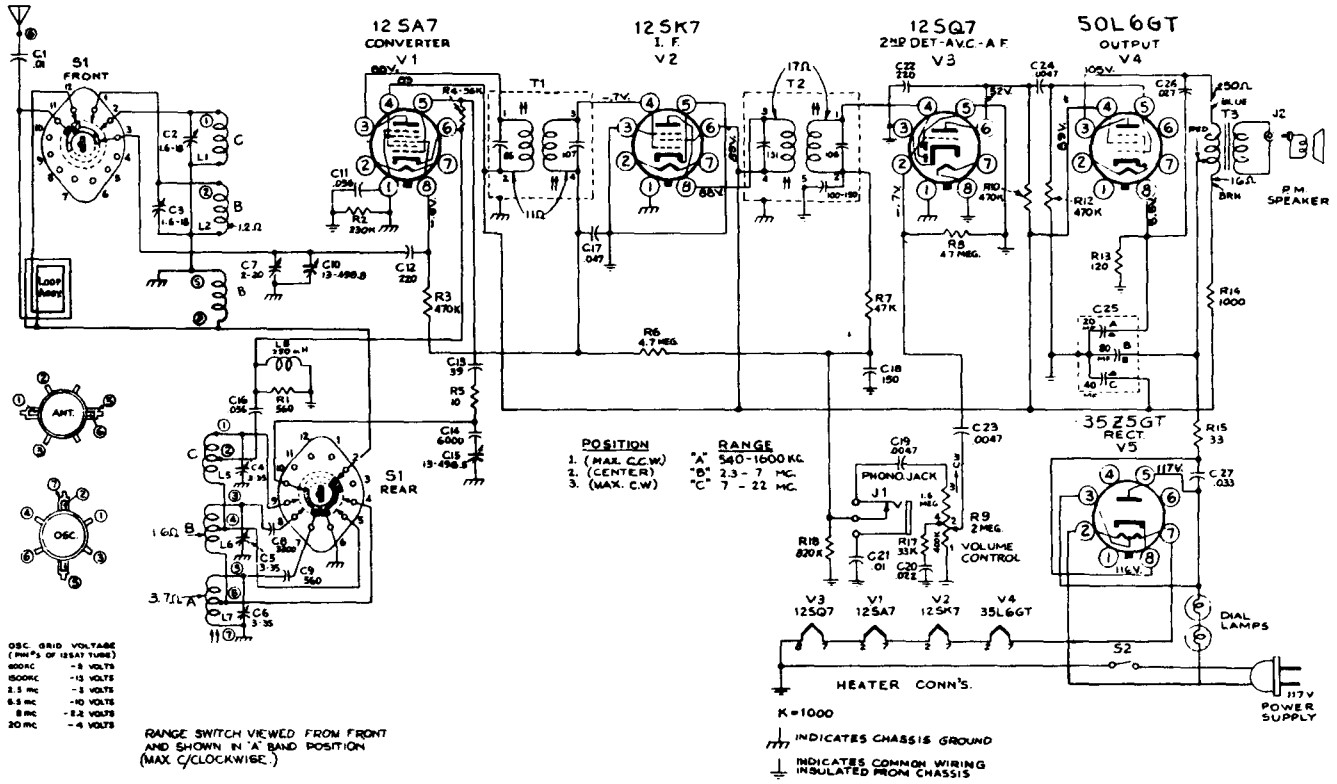

FIG. 2—SCHEMATIC DIAGRAM (533D)

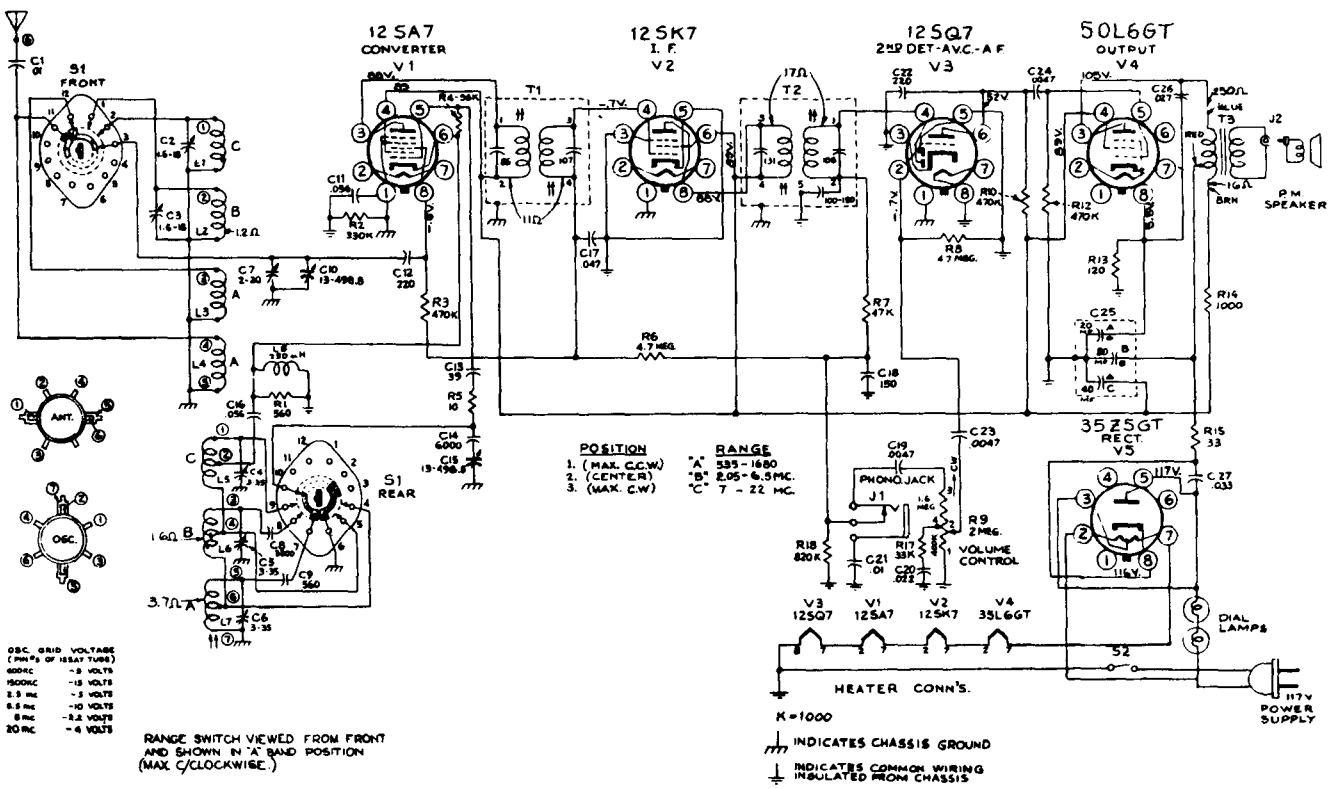

FIG. 3.—SCHEMATIC DIAGRAM (533F)

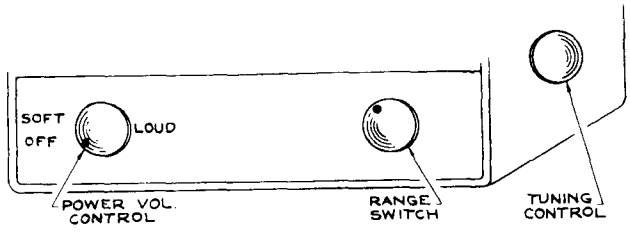

FIG. 4—LOCATION OF CONTROLS

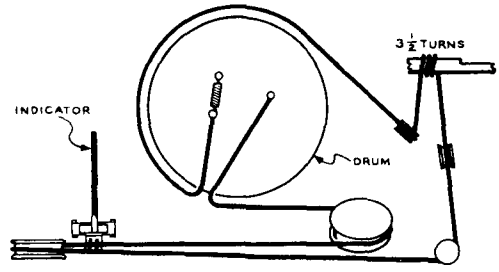

SCHEMATIC DIAGRAM OF DRIVING CABLE WITH DRUM IN EXTREME COUNTER-CLOCKWISE POSITION (CONDENSER PLATES CLOSED). POINTER CONNECTED TO REAR CORD.

FIG. 5—DIAL CORD STRINGING

Critical Lead Dress

1. Dress blue lead of output transformer close to chassis.
2. Dress C1 away from antenna coil winding.
3. Keep body of C12 away from chassis base.
4. Keep green wire from phono jack to terminal board taut and away from blue lead of output transformer.
5. Dress R11 against back apron of chassis.
6. Keep C23 away from blue lead of output transformer.
7. Dress C19 close to chassis base.

Alignment Procedure

Before aligning the receiver, set the gang condenser for maximum capacity and then set the dial cursor on the calibration point at the extreme left hand end of the dial. The dial scale may be readily removed from the cabinet and used as a reference during alignment.

When only a portion of the circuit is to be aligned select the required portion and perform all the remaining steps.

In order to obtain best results, it is advisable to align the 455 KC I.F.'s with the help of a cathode ray oscilloscope. The scope should be connected across the volume control. If this equipment is not available, use the method outlined below in the alignment chart.

ALIGNMENT CHART

Order of Alignment		TEST OSCILLATOR				RECEIVER				
		Connect "HI" Side To	Connect "LO" Side To	Dummy Antenna	Frequency Setting	Range Selector	Receiver Dial Setting	Circuit to Adjust	Adjustment Symbols	Notes
I.F. Alignment	1	12SK7 Grid Pin #8	GND	.01 MFD.	455 KC	'A' Band	'HI' End	2nd I.F. Trans.	T-2	Max. Out.
	2	12SA7 Grid Pin #8	Same	Same	Same	Same	Same	1st I.F. Trans.	T-1 *	Same
"A" Band Alignment	3	Ant. Lead	Same	200 MMF	1400 KC	Same	1400 KC	Osc.	C-6	Same
	4	Same	Same	Same	Same	Same	Same	Ant.	C-7	Same
	5	Same	Same	Same	600 KC	Same	600 KC	Osc.	L-7	Same
	6	Repeat Steps 3,4 & 5.								
"B" Band Alignment	7	Ant. Lead	GND	300 Ohms	6.1 MC	'B' Band	6.1 MC	Osc.	C-5 †	Same
	8	Same	GND	Same	Same	Same	Same	Ant.	C-3 ‡	Same
	9	Repeat Steps 7 & 8.								
"C" Band Alignment	10	Ant. Lead	GND	300 Ohms	18.2 MC	'C' Band	18.2 MC	Osc.	C-4 †	Same
	11	Same	Same	Same	Same	Same	Same	Ant.	C-2 ‡	Same
	12	Repeat Steps 10 & 11.								

* Do not Re-Adjust T-2
† Use minimum capacity peak if two peaks can be obtained.
‡ Rock Gang.

REPLACEMENT PARTS FOR MODELS 533D & 533F

Insist on genuine factory tested parts, which are readily identified and may be purchased from authorized dealers.

Stock No.	Description
	Chassis Assembly
S-4450	" - trimmer dual 1.6-18 MMF. (C-2,C-3)
S-4451	" - " triple 3-35 MMF. (C-4,C-5,C-6)
S-4438	Capacitor - 150 MMF ceramic (C-18)
S-4439	" - 220 MMF. mica (C-12, C-22)
S-4440	" - 560 MMF. " (C-9)
S-4441	" - 3,300 " " (C-8)
S-4442	" - 6,000 " " (C-14)
--	" - .0047 Mfd. " (C-19,C-23,C-24)
--	" - .01 " " (C-1, C-21)
--	" - .022 " (C-20)
--	" - .027 " (-26)
--	" - .035 " (C-27)
--	" - .047 " (C-17)
--	" - .056 " (C-11, C-16)
S-4452	" - electrolytic 80-40-20 Mfd. (C-25A, C-25B, C-25C)
S-4453	Capristor - (39 MMF. -10 ohm)(C-13, R-5)
S-5239	Coil - antenna coil (533F) (L-1,L-2,L-3,L-4)
S-5241	" - " " (533D) (L-1,L-2)
S-5240	" - oscillator coil (533F) (L-5,L-6,L-7)
S-4457	" - peaking coil & resistor assy. (250 MH coil & 560 ohm resistor)(L-8,R-1)
S-6010	Condenser - variable (C-10, C-15, C-7)
S-6044	Indicator - station selector pointer
--	Resistor 33 ohms, 1 watt (R-15)
--	" 120 " ½ " (R-13)
--	" 1,000 " 1 " (R-14)
--	" 33,000 " ½ " (R-17)
--	" 47,000 " ½ " (R-7)
--	" 56,000 " ½ " (R-4)
--	" 330,000 " ½ " (R-2)
--	Resistor 470,000 ohms, ½ watt (R-3,R-10,R-12)
--	" 820,000 " ½ " (R-18)
--	" 4.7 Megohms ½ " (R-6, R-8)

Stock No.	Description
	Chassis Assembly (Cont'd)
S-6011	Switch - range switch (533D) (S-1)
S-6012	Switch - range switch (533F) (S-1)
S-4487	Transformer - 1st I.F. (T-1)
S-4488	" - 2nd I.F. (T-2)
S-6013	Volume Control - 2 Megohm (R-9)(S-2)
	Speaker Assembly
S-6014	Speaker
S-6046	Cone - cone & voice coil assy
S-6022	Output transformer (T-3)
S-4491	Plug - male plug for speaker cable (J-2)
	Miscellaneous Assembly
S-5243	Back - back cover & loop assembly (533D)
S-5244	Back - back cover for cabinet (533F)
S-6015	Baffle board & grille cloth
S-6016	Cabinet - plastic cabinet
S-4313	Cord - dial cord
S-4460	" - power cord
S-6017	Dial Scale (533D)
S-6018	Dial Scale (533F)
	Dial Lamp (mazda 1490)
S-5661	Emblem (RCA Victor)
S-4501	Fastener - push fastener for back cover
S-4465	Jack - phono input jack
S-6019	Knob - volume and power switch
S-6020	" - tuning
S-6021	" - Range switch

Only items listed under stock numbers are available as Replacement Parts.

All parts subject to change or withdrawal without notice.

RCA VICTOR

"HIS MASTER'S VOICE"

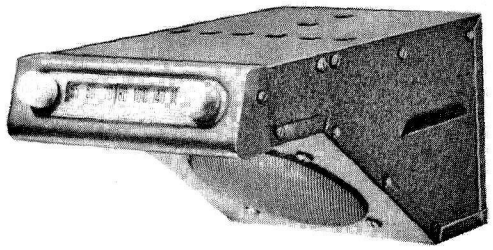

MODEL A550 & A550X

AUTO RECEIVERS

MODELS A550 & A550X TECHNICAL DATA

—1949 No. 5—

GENERAL SERVICE DIVISION
RCA VICTOR COMPANY LIMITED
MONTREAL, QUE.

ELECTRICAL AND MECHANICAL SPECIFICATIONS

Frequency Range ..... 540-1600 K.C.
Intermedate Frequency ..... 455 K.C.
Tuning Ratio .....5 to 1

TUBE COMPLEMENT

(1) 6BE6 ..... Converter
(2) 6BA6 ..... I.F. Amplifier
(3) 6AV6 .....2nd Det. A.V.C. & 1st A.F.
(4) 6AQ5 ..... Power Output
(5) 6X4 ..... Rectifier

LOUDSPEAKER

Type ..... 5 inch Round P.M.
V.C. Impedance ..... 3.4 Ohms at 400 cycles

POWER SUPPLY

	A-550	A-550X
Source	6 Volts auto battery	12 volts auto battery
Current drain	4.2 Amps	2.2 Amps

POWER OUTPUT

Undistorted ..... 2.0 Watts
Maximum ..... 3.5 Watts

CABINET DIMENSIONS

Height ..... 5"
Width ..... 5¾"
Depth ..... 9½"

OPERATING CONTROLS

Left Knob .....Volume Control & Switch
Right Knob .....Tuning

General Description

The models A-550 and A-550X are five tube single band superheterodyne automobile receivers. The A-550 receiver is designed to operate from a standard six volt car battery, whereas the A-550X has been designed to operate from a twelve volt "A" battery. The A-550X may also be converted for six volt operation (see Schematic Diagram).

The use of miniature tubes and components has made possible the design of receivers taking up little space, yet providing performances superior to those of many units much larger in size. The receivers are designed to be mounted under the dashboard and all operating controls are located on the dial surface.

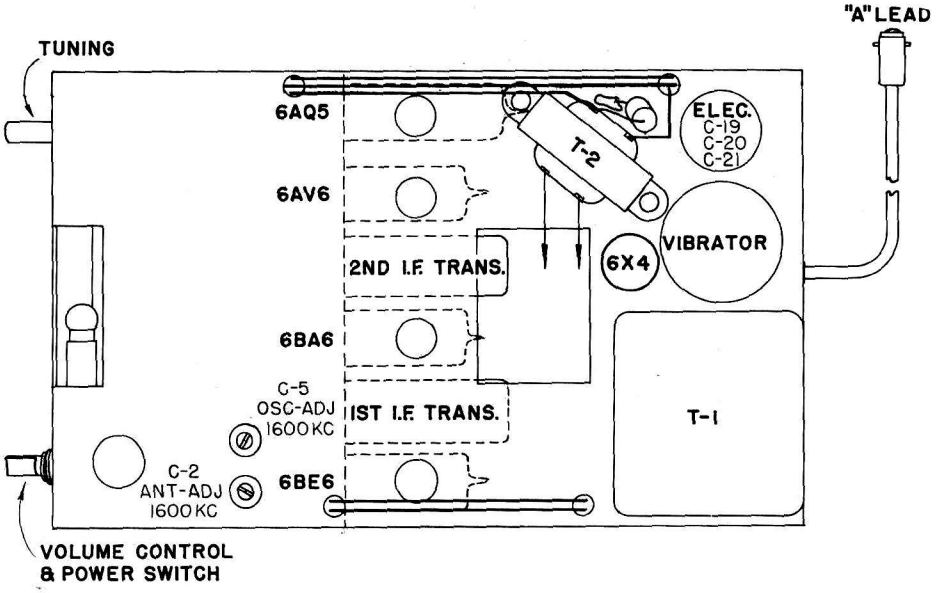

Fig. 1. Chassis Layout and Alignment Adjustments

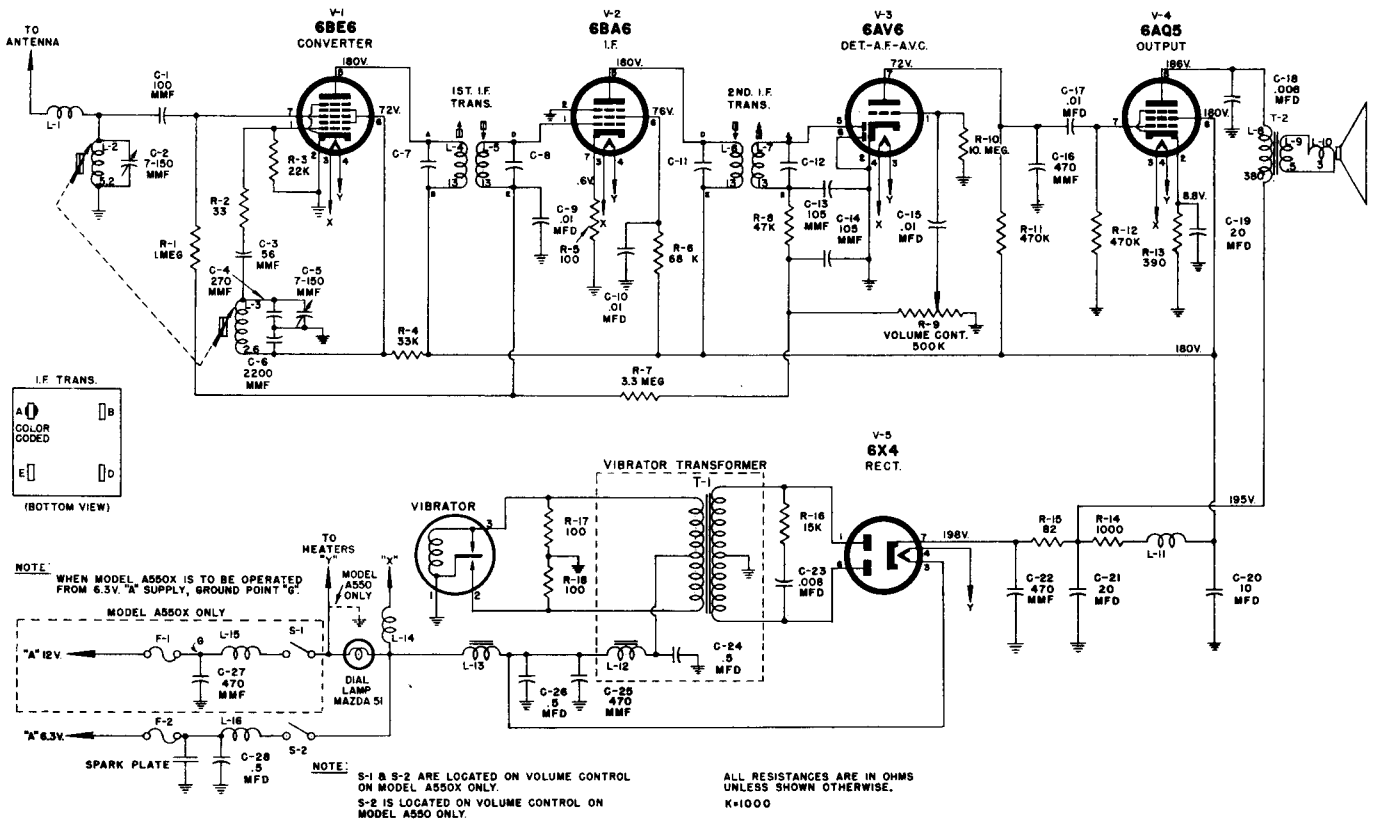

Fig. 2. Schematic Diagram (A550 & A550X)

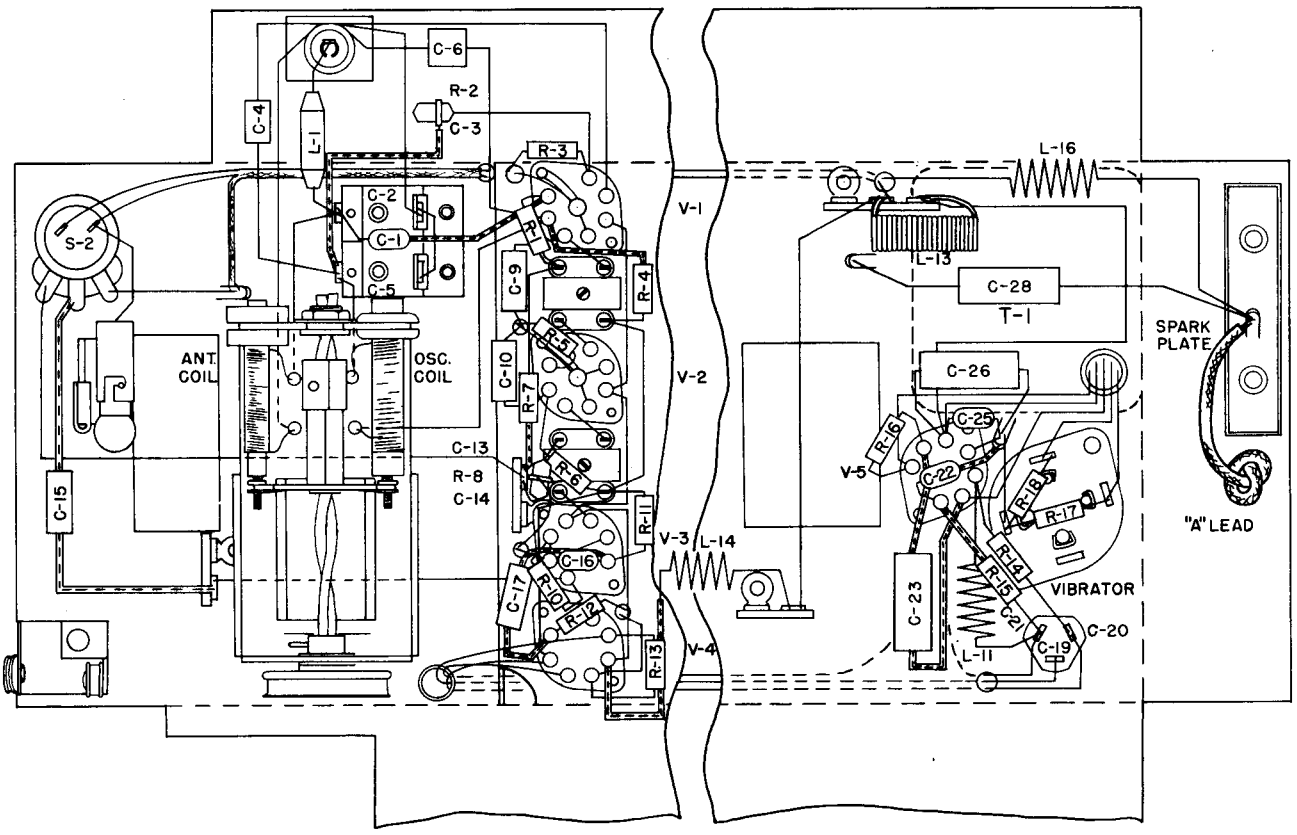

Fig. 3. Wiring Diagram (A550)

SERVICE DATA

ANTENNA CIRCUIT

It is very important that these instructions be followed when installing these receivers.

The antenna circuits of these receivers is designed to accommodate an antenna having an output capacity not exceeding 150 MMF. If an antenna with a greater output capacity is used, a capacitor should be placed in series with the antenna, so as to reduce the output capacity. The capacitor should be placed in the receiver between the antenna choke (L1) and antenna coil (L2).

After an installation has been completed, the receiver should be tuned to a weak signal at the high end of the band (1400 to 1600 KC) and the antenna trimmer should be adjusted for maximum output. This trimmer is accessible through a hole in the bottom of the receiver case.

NOISE ELIMINATION

The presence of noise in an auto receiver is in most cases, due to the high discharge of electrical energy radiated and conducted through the wires to the receiver from the spark plugs and distributor heads. The reduction of such noise may be carried out methodically by: (1) increasing the effectiveness of the antenna by providing protection against stray pickup; (2) subduing the interference at its source; and (3) by installing a filter to prevent transmission of interference into the receiver circuits.

GENERATOR NOISE:

The noise or "whine" caused by the commutator may be eliminated by by-passing to ground the generator "armature" terminal with a condenser.

CAUTION:

Do not, under any circumstance, connect the condenser to the generator "field" terminal.

WHEEL STATIC:

In some automobiles, interference may be caused by the front wheels, where a static charge is built up and leaks away through the poor contact of the wheel bearings. This may be eliminated by installing a front wheel static collector in the hub cap of the front wheels, which provides the static charge with a low resistance path to ground. Should the noise persist, the interference may be due to the tire, road surface or climatic conditions. The latter cannot be justified but the interference due to the tire may be suppressed by injecting a powder (available at local car dealers) into the tire inner tube.

Alignment Procedure

Before aligning the receiver, mesh the tuning unit (cores inside coils) and set the dial cursor on the calibration point at the extreme left hand end of the dial.

When only a portion of the circuit is to be aligned select the required portion and perform all the remaining steps.

In order to obtain best results, it is advisable to align the 455 kc I.F.'s with the help of a cathode ray oscilloscope. The scope should be connected across the volume control. If this equipment is not available, use the method outlined below in the alignment chart.

ALIGNMENT CHART

Order of Alignment		TEST OSCILLATOR				RECEIVER				
		Connect "HI" Side to	Connect "LO" Side to	Dummy Antenna	Frequency Setting	Range Selector	Dial Setting	Circuit to Adjust	Adjustment Symbols	Notes
I.F. Alignment	1	Pin No. 1 6BA6	Gnd.	.1 Mfd.	455 KC		"Hi" End	2nd I.F. Trans.	L6 & L7	Max. Out
	2	Pin No. 7 6BE6	Gnd.	.1 Mfd.	455 KC		Same	1st I.F. Trans.	L4 & L5	Max. Out
R.F. Alignment	3	Ant.	Gnd.	22 MMF. in Series & 56 across	1600 KC		1600 KC	Osc.	C-5	Same
	4	Ant.	Gnd.	Same	1600 KC		1600 KC	Ant.	C-2	Same
	5	* Ant.	Gnd.	Same	1350 KC		1350 KC	Osc.	Osc. Coil Slug	Same
	6	Ant.	Gnd.	Same	1350 KC		1350 KC	Ant.	Ant. Coil Slug	Same

* (1) NOTE: The oscillator coil slug has been pre-set in the factory and no further adjustment of this coil will be necessary unless the slug has been tampered with.

(2) NOTE: Final adjustments of C-2, must be made after the receiver has been installed and the antenna connected. (See "Antenna Circuit").

REPLACEMENT PARTS FOR MODELS A550 & A550X

Insist on genuine factory tested parts, which are readily identified and may be purchased from authorized dealers.

STOCK NO.	DESCRIPTION	LIST PRICE
	CHASSIS ASSEMBLY	
S-4799	Capacitor - trimmer assembly (C2-C5)	
45233	" - ceramic 100 MMF 10% (C1)	
S-4856	" - 270 MMF 500 V. (C4)	
S-4819	" - 470 " 350 V. (C16-C25-C27-C22)	
S-4857	" - 2200 " 500 V. (C6)	
S-4375	" - .008 Mfd. 1600 V. (C18)	
70630	" - .008 " 600 V. (C23)	
70610	" - .01 " 400 V. (C9-C10-C15-C17)	
S-4196	" - .5 " 100 V. (C24-C26-C28)	
S-4523	Capristor - 56 MMF 33 ohms ½ W. (C3-R2)	
S-4614	" - 105 - 105 MMF 47000 ohms (C13-C14-R8)	
S-3131	Capacitor - Electrolytic 20-10-10 Mfd. (C19-C20-C21)	
S-2987	Choke - antenna choke coil (L1)	
S-4812	Coil - tuner coil (Osc.) (L3)	
S-4813	" - " " (antenna) (L2)	
S-4814	Core - iron core for tuner coil (osc.)	
S-4815	Core - iron core for tuner coil (antenna)	
S-4796	Indicator - station selector pointer	
15961	Resistor - 82 ohms ½ watt (R15)	
34765	" - 100 " ¼ " (R17-R18)	
30498	" - 390 " " " (R13)	
34766	" - 1000 " " " (R14)	
36714	" - 15000" ½ " (R16)	
30492	" - 22000" " " (R3)	
30683	" - 33000" " " (R4)	
14138	" - 68000" ½ " (R6)	
30648	" - 470,000 ohms ½ watt (R11-R12)	
30652	" - 1 Megohm ½ watt (R1)	
31417	" - 3.3 " " " (R7)	
30992	" - 10 " " " (R10)	
S-4798	Shaft - Drive Shaft	
13686	Socket - Vibrator socket	

STOCK NO.	DESCRIPTION	LIST PRICE
	CHASSIS ASSEMBLY - Cont'd	
73117	Socket - Tube socket (less shield)	
S-4860	" - " " (with shield)	
S-4795	Tuner - Permeability tuner	
S-4802	Transformer - Vibrator transformer (T1)	
S-4487	" - 1st I.F. (L4-L5-C7-C8)	
S-4662	" - 2nd I.F. (L6-L7-C11-C12)	
S-4797	Volume Control - ½ Meg. (R9-S2)	
S-4801	Vibrator	
	SPEAKER ASSEMBLY 5" P.M.	
35849	Dust Cap (Pkg. 3)	
S-4809	Cone - cone & voice coil assembly (L10)	
S-4807	Speaker	
S-4800	Output Transformer (L8-L9)	
	MISCELLANEOUS ASSEMBLIES	
S-4803	Case - body case	
S-4804	" - cover	
S-4805	" - nose	
5025	Capacitor - generator capacitor	
S-4313	Cord - dial cord	
S-4806	Dial Scale	
S-4816	Grille - speaker grille	
6148	Fuse - (10 amps)	
S-4810	Knob - tuning & volume controls	
S-4861	Lead - "A" Lead (with male connector)	
11765	Lamp - pilot lamp (Mazda 51)	
S-3320	Suppressor - distributor	
32481	Spring - Dial cord tension (Pkg. 5)	
S-4811	Socket - pilot lamp socket	
S-4868	Mounting Kit	

All prices and parts are subject to change or withdrawal without notice.

RCA VICTOR

"HIS MASTER'S VOICE"

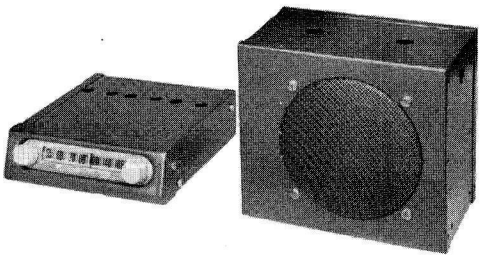

Model A552

AUTO RECEIVER

MODEL A552
SERVICE DATA

— 1949 NO. 9 —

GENERAL SERVICE DIVISION
RCA VICTOR COMPANY LIMITED
MONTREAL, QUE.

Electrical and Mechanical Specifications

Frequency Range ---------- 540—1600 KC
Intermediate frequency ---------- 455 KC
Tuning Ratio ---------- 5 to 1

TUBE COMPLEMENT

(1) 6BE6 ---------- Converter
(2) 6BA6 ---------- I.F. Amplifier
(3) 6AV6 ---------- 2nd Det. A.V.C. and 1st A.F.
(4) 6AQ5 ---------- Power Output
(5) 6X4 ---------- Rectifier

LOUDSPEAKER

Type ---------- 5 Inch round P.M.
V.C. Impedance ---------- 3.4 Ohms at 400 cycles

POWER SUPPLY

Source ---------- 6 Volts auto battery
Current drain ---------- 4.2 Amps

POWER OUTPUT

Undistorted ---------- 2.0 Watts
Maximum ---------- 3.5 Watts

CABINET DIMENSIONS

	Height	Width	Depth
Radio Unit	1¾"	6"	7½"
Power Supply Unit	5½"	6⅜"	4⅛"

OPERATING CONTROLS

Left Knob ---------- Volume Control and Switch
Right Knob ---------- Tuning

General Description

The Model A552 is a five tube single band superheterodyne automobile receiver which consists of two units. The first unit houses the R.F. oscillator, I.F. and audio circuits; the second unit houses the power supply and the loudspeaker. These two units are linked together by a shielded cable, through which the operating voltages are fed to the receiver from the power supply. The output of the receiver is also fed through this cable to the speaker which is located in the power supply housing.

The use of miniature tubes and components has made possible the design of a receiver taking up little space yet providing performances superior to those of many units much larger in size. The receiver is designed to be mounted under the dashboard; the loudspeaker and power supply unit can be mounted on the firewall or bulkhead. The operating controls are located on the receiver unit.

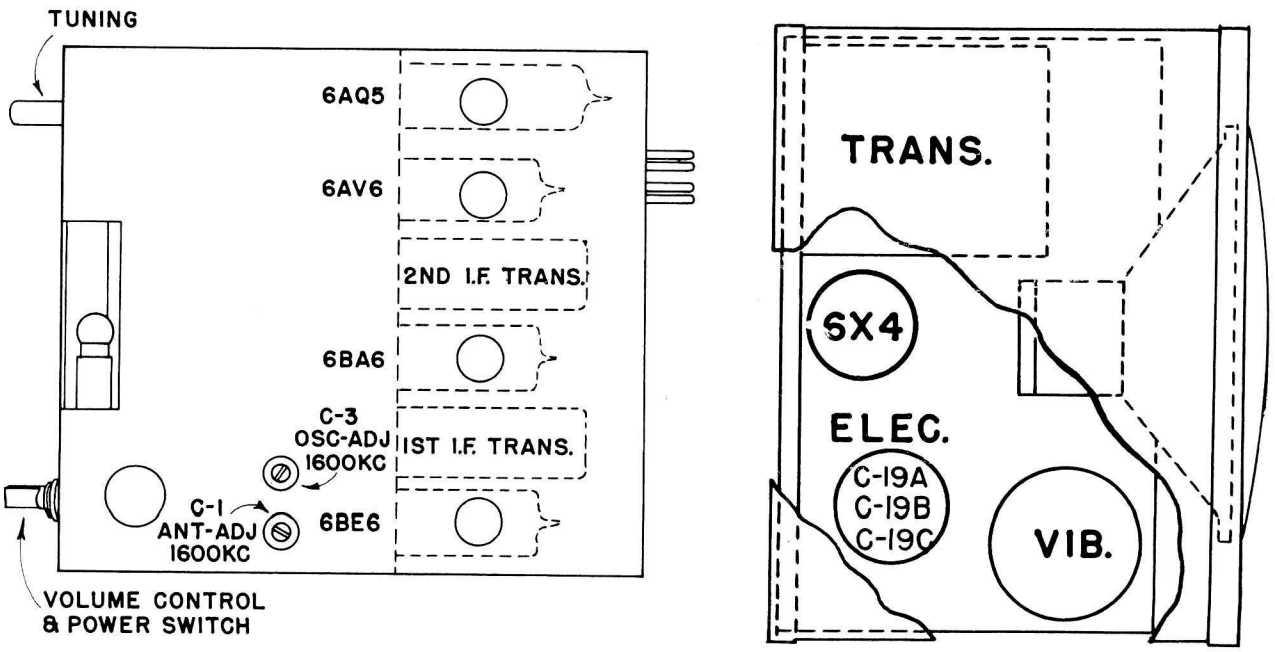

Fig. 1—Chassis Layout and Alignment Adjustment

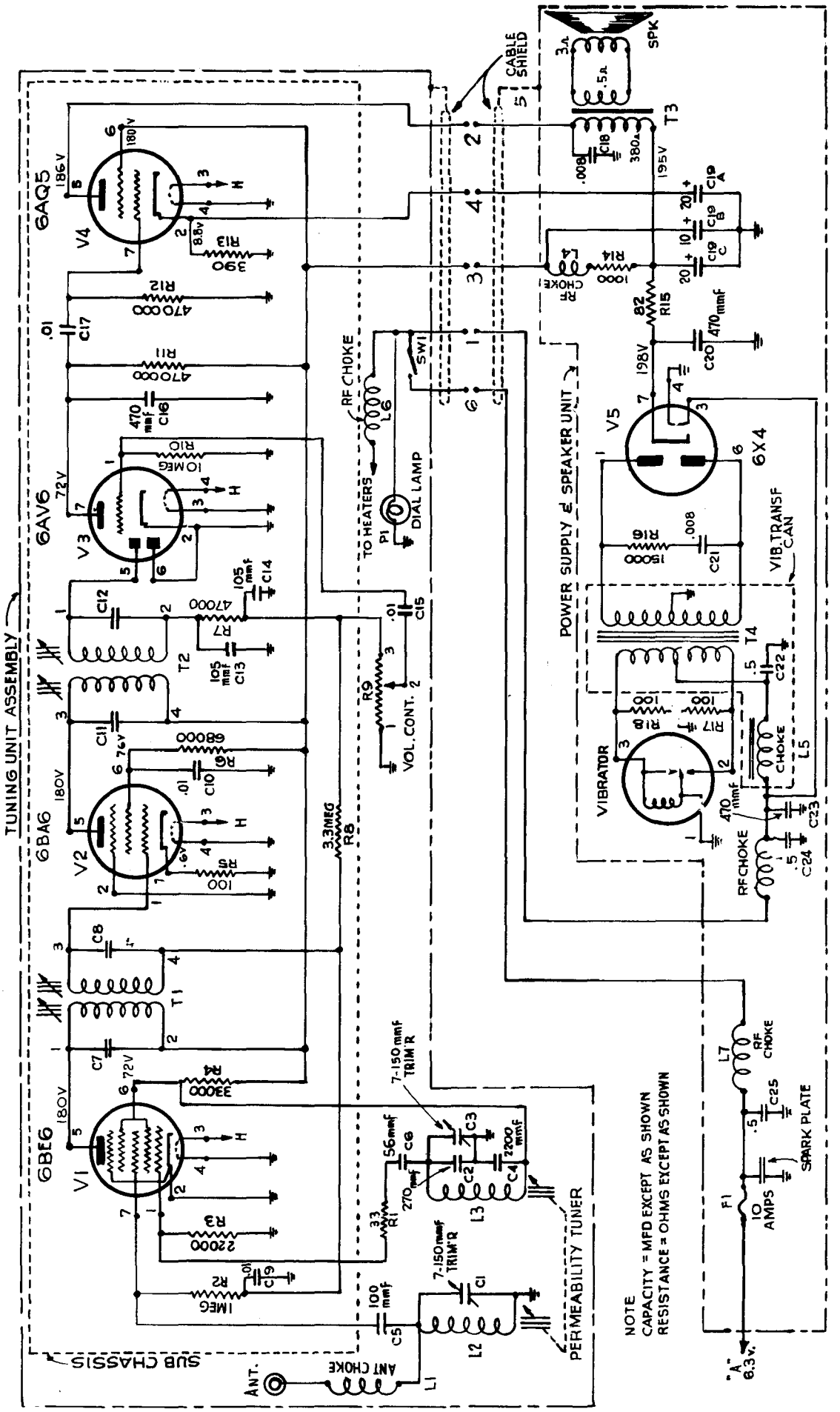

Fig. 2—Schematic Diagram

SERVICE DATA

Antenna Circuit

It is very important that these instructions be followed when installing this receiver.

The antenna circuit of this receiver is designed to accommodate an antenna having an output capacity not exceeding 150 MMF. If an antenna with a greater output capacity is used, a capacitor should be placed in series with the antenna, so as to reduce the output capacity. The capacitor should be placed in the receiver between the antenna choke (L1) and antenna coil L2.

After an installation has been completed, the receiver should be tuned to a weak signal at the high end of the band (1400 to 1600 KC) and the antenna trimmer should be adjusted for maximum output. This trimmer is accessible through a hole in the bottom of the receiver case.

Noise Elimination

The presence of noise in an auto receiver is in most cases, due to the high discharge of electrical energy radiated and conducted through the wires to the receiver from the spark plugs and distributor head. The reduction of such noise may be carried out methodically by: (1) increasing the effectiveness of the antenna by providing protection against stray pickup; (2) subduing the interference at its source; and (3) by installing a filter to prevent transmission of interference into th receiver circuits.

GENERATOR NOISE:

The noise or "whine" caused by the commutator may be eliminated by by-passing to ground the generator "armature" terminal with a condenser.

CAUTION:

Do not, under any circumstance, connect the condenser to the generator "field" terminal.

WHEEL STATIC:

In some automobiles, interference may be caused by the front wheels, where a static charge is built up and leaks away through the poor contact of the wheel bearings. This may be eliminated by installing a front wheel static collector in the hub cap of the front wheels, which provides the static charge with a low resistance path to ground. Should the noise persist, the interference may be due to the tire, road surface or climatic conditions. The latter cannot be justified but the interference due to the tire may be suppressed by injecting a powder (available at local car dealers) into the tire inner tube.

ALIGNMENT PROCEDURE

Before aligning the receiver, mesh the tuning unit (cores inside coils) and set the dial cursor on the calibration point at the extreme left hand end of the dial.

When only a portion of the circuit is to be aligned select the required portion and perform all the remaining steps.

In order to obtain best results, it is advisable to align the 455 kc I.F.'s with the help of a cathode ray oscilloscope. The scope should be connected across the volume control. If this equipment is not available, use the method outlined below in the alignment chart.

ALIGNMENT CHART

ORDER OF ALIGNMENT		TEST OSCILLATOR				RECEIVER				
		CONNECT "HI" SIDE TO	CONNECT "LO" SIDE TO	DUMMY ANTENNA	FREQUENCY SETTING	RANGE SELECTOR	DIAL SETTING	CIRCUIT TO ADJUST	ADJUSTMENT SYMBOLS	NOTES
I.F. ALIGNMENT	1	Pin No. 1 6BA6	Gnd.	.1 Mfd.	455 KC		"Hi" End	2nd I.F. Trans.	Top and Bottom Slugs in T-2	Max. Out
	2	Pin No. 7 6BE6	Gnd.	.1 Mfd.	455 KC		Same	1st I.F. Trans.	Top and Bottom Slugs in T-1	Max. Out
R.F. ALIGNMENT	3	Ant.	Gnd.	22 MMF. in Series & 56 across	1600 KC		1600 KC	Osc.	C-3	Same
	4	Ant.	Gnd.	Same	1600 KC		1600 KC	Ant.	C-1	Same
	5	* Ant.	Gnd.	Same	1350 KC		1350 KC	Osc.	Osc. Coil Slug	Same
	6	Ant.	Gnd.	Same	1350 KC		1350 KC	Ant.	Ant. Coil Slug	Same

* (1) NOTE: The oscillator coil slug has been pre-set in the factory and no further adjustment of this coil will be nesecsary unless the slug has been tampered with.

(2) NOTE: Final adjustments of C-1, must be made after the receiver has been installed and the antenna connected. (See "Antenna Circuit").

REPLACEMENT PARTS FOR MODEL A552

Insist on genuine factory tested parts, which are readily identified and may be purchased from authorized dealers.

Stock No.	Description	List Price
	CHASSIS ASSEMBLY	
S-4799	Capacitor - trimmer dual 7-150 MMF (C1-C3)	
45233	" - ceramic 100 MMF 10% (C5)	
S-4856	" - 270 MMF 500 V (C2)	
S-4819	" - 470 " 350 V (C16,C20,C23)	
S-4857	" - 2200 " 500 V (C4)	
S-4375	" - .008 MFD 1600V (C-21)	
	" - .008 " 600 V (C-18)	
	" - .01 " 400 V (C9,C10,C17,C15)	
	" - .5 " 100 V (C22-C24-C25)	
S-4523	Capristor - 56 MMF 33 ohms ¼w (C6-R1)	
S-4614	" - 105-105 MMF 47000 ohms (C13-C14-R7)	
S-3131	Capacitor - Electrolytic 20-10-20mfd (C-19A-B-C)	
S-2987	Choke - Antenna choke coil (L-1)	
S-4812	Coil - Tuner coil (Osc.)(L3)	
S-4813	" - " " (Antenna)(L2)	
S-4814	Core - Iron core for tuner coil (Osc.)	
S-4815	" - Iron core for tuner coil (Ant.)	
S-4796	Indicator - Station selector pointer	
13961	Resistor - 82 ohms ½ watt (R15)	
	" -100 ohms ½ " (R5-R17-R18)	
	" 390 " " " (R13)	
	" 1000 " " " (R14)	
	" 15000 " " " (R16)	
	" 22000 " " " (R3)	
	" 33000 " 1 " (R4)	
	" 68000 " ½ " (R6)	
	" 470,000 " " " (R11-R12)	
	" 1 Megohm " " (R2)	
	" 3.3 " " " (R8)	
	" 10 " " " (R10)	
S-4877	Shaft - Drive shaft	
13686	Socket - Vibrator Socket	

Stock No.	Description	List Price
	CHASSIS ASSEMBLY - Cont'd	
73117	" - Tube socket (less shield)	
S-4860	" - " " (with shield)	
S-4795	Tuner - Permeability tuner	
S-4878	Transformer - Vibrator Transformer (T4)	
S-4487	" - 1st I.F. (C7-C8)(T1)	
S-4662	" - 2nd I.F. (C11-C12)(T2)	
S-4879	Volume Control (R9-S1)	
S-4801	Vibrator	
	SPEAKER ASSEMBLY	
35849	Dust Cap (Pkg. 3)	
S-4809	Cone - - Cone & Voice Coil Assy.	
S-4892	Speaker	
S-3908	Output Transformer (T3)	
	MISCELLANEOUS ASSEMBLIES	
S-5004	Cable and socket assy.	
S-4880	Case - Receiver case	
S-4805	" - " " nose	
S-4881	" - Speaker case	
S-4882	Cover - " " cover	
S-4313	Cord - Drive cord	
5025	Capacitor - Generator capacitor	
S-4884	Dial Scale	
S-4883	Grille - Speaker Grille	
6148	Fuse (10 amps)	
S-4810	Knob - (Tuning & volume controls	
S-4861	Lead - "A" lead (with male conn.)	
11766	Lamps - pilot lamps	
S-3320	Suppressor - Distributor	
32481	Spring - Dial cord tension (pkgs 5)	
S-4875	Mounting Kit	

Items not shown in the Replacement Parts List are not supplied.
All parts and prices subject to change or withdrawal without notice.

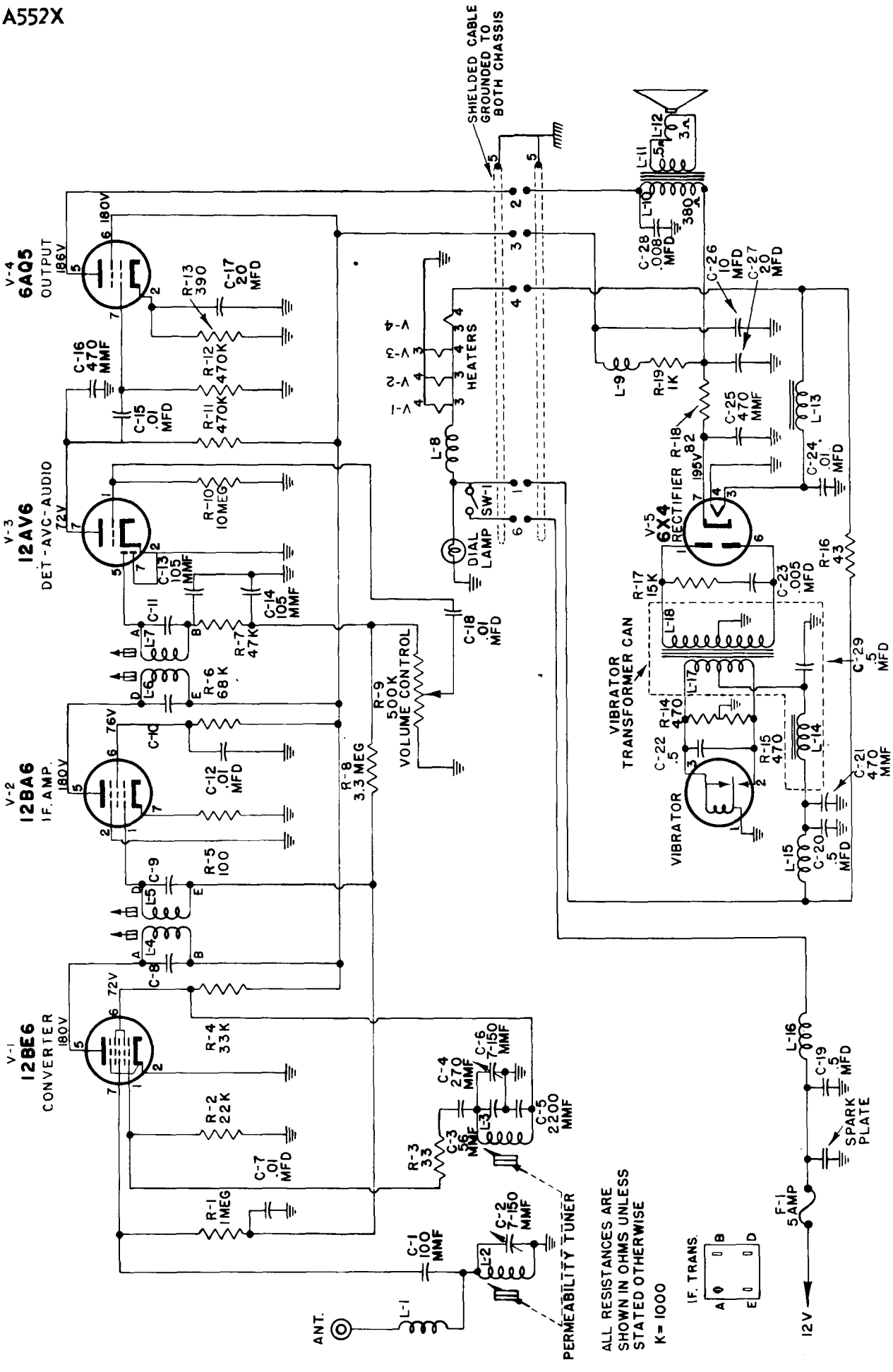

Schematic Diagram

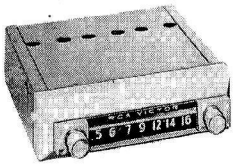

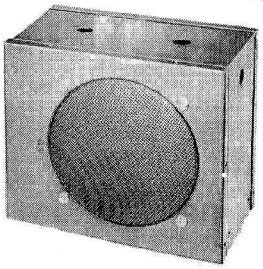

MODEL A-558

RCA VICTOR

"HIS MASTER'S VOICE"

AUTO RECEIVER

MODEL A558

SERVICE DATA

— 1951 NO. 7 —

GENERAL SERVICE DIVISION
RCA VICTOR COMPANY LIMITED
MONTREAL, QUE.

Electrical and Mechanical Specifications

Frequency Range ---------- 540—1600 KC
Intermediate frequency ---------- 455 KC
Tuning Ratio ---------- 5 to 1

TUBE COMPLEMENT

(1) 6BE6 ---------- Converter
(2) 6BA6 ---------- I.F. Amplifier
(3) 6AV6 ---------- 2nd Det. A.V.C. and 1st A.F.
(4) 6AQ5 ---------- Power Output
(5) 6X4 ---------- Rectifier

LOUDSPEAKER

Type ---------- 5 Inch round P.M.
V.C. Impedance ---------- 3.4 Ohms at 400 cycles

POWER SUPPLY

Source ---------- 6 Volts auto battery
Current drain ---------- 4.2 Amps

POWER OUTPUT

Undistorted ---------- 2.0 Watts
Maximum ---------- 3.5 Watts

CABINET DIMENSIONS

	Height	Width	Depth
Radio Unit	1¾"	6"	7½"
Power Supply Unit	5½"	6⅜"	4⅛"

OPERATING CONTROLS

Left Knob ---------- Volume Control and Switch
Right Knob ---------- Tuning

REPLACEMENT PARTS FOR MODEL A558

Insist on genuine factory tested parts, which are readily identified and may be purchased from authorized dealers.

Stock No.	Description
	TUNER UNIT ASSEMBLIES
S-4799	Capacitor - trimmer dual 7-150 MMF. (C2,C6)
45233	Capacitor - ceramic 100 MMF. 500V. (C1)
S-6133	Capacitor - 220 MMF. 500 V. (C4)
S-4819	Capacitor - ceramic 470 MMF., 350 V. (C16)
	Capacitor - paper .01 Mfd. 400 V. (C-7)
73960	Capacitor - Hi K. .01 Mfd. (C15)
	Capacitor - paper .05 Mfd. 400 V. (C12)
S-4523	Capacitor - 33 ohms ¼W. 56 MMF. 500 V. (R3,C3)
S-4614	Capristor - 47 K ¼W. 2-105 MMF. 500 V. (R7,C13, C14)
S-5606	Case - Tuner case
S-2987	Choke Coil (Ant.) (L-1)
S-6160	Choke Coil (Heater's) (L-8)
S-4313	Cord - dial cord
S-6116	Dial - dial scale
S-6117	Eyelet - for dial scale
S-5621	Knob - knobs for vol. & tuning-
*S-6168	Nose - tuner case nose
S-5553	Plug - Cable plug
S-6131	Pointer - dial pointer
	Resistor - 100 ohms, ± 10% ½W. (R5)
	Resistor - 390 ohms, ± 10% ½W. (R-13)
	Resistor - 22,000 ohms ± 10% ½W. (R-2)
	Resistor - 47,000 ohms ± 10% 1W. (R4,R6)
	Resistor - 470,000 ohms ± 10% ½W. (R11,R12)
	Resistor - 1.0 Megohms ± 20% ½W. (R1)
	Resistor - 3.3 Megohms ± 20% ½W. (R8)
	Resistor - 10 Megohms ± 20% ½W. (R10)
S-6110	Tuner
S-4487	Transformer - 1st I.F. transformer
S-5570	" - 2nd I.F. "
*S-6163	Volume Control (R9)

Stock No.	Description
	SPEAKER & POWER SUPPLY ASSEMBLY
S-4819	Capacitor - ceramic 470 MMF. 350 V. (C21,C25)
	Capacitor - paper .008 Mfd. 600 V. (C-28)
	Capacitor - paper .008 Mfd. 1600 V. (C-23)
S-4196	Capacitor - paper .5 Mfd. 200 V. (C-19,C20)
S-3131	Capacitor - Elect. 20 Mfd. 25V. (C17)
*S-6166	Case - power supply case
*S-6167	Case - " " " front cover
S-5604	Cone - cone & voice coil assy.
S-4883	Grille - speaker grille
S-6112	Lead - 'A' lead assembly
	Resistors - 82 ohms ± 10% ½W. (R18)
	Resistors - 100 " ± 10% ½W. (R14,R15)
	Resistors - 1,000 ohms ± 10% ½W. (R19)
	Resistors - 15,000 ohms ± 10% ½ W.(R17)
13686	Socket - vibrators socket
S-5614	Socket - cable socket with shield
S-5004	Socket & cable assembly
S-6164	Speaker
S-3908	Transformer - output (L10,L11)
S-4878	" - vibrator trans.(L17,L18)
S-4801	Vibrator - (6V)
	MISCELLANEOUS ASSEMBLY
5025	Capacitor - Generator capacitor
6148	Fuse - 10A
*S-6177	Kit - Mounting Kit
S-4861	Lead - "A" lead (Fuse holder)
S-3320	Suppressor - Distributor suppressor

*Indicates New Stock Item

Items not shown in the Replacement Parts List are not supplied.
All parts subject to change or withdrawal without notice.

ALIGNMENT PROCEDURE

Before aligning the receiver, mesh the tuning unit (cores inside coils) and set the dial cursor on the calibration point at the extreme left hand end of the dial.

When only a portion of the circuit is to be aligned select the required portion and perform all the remaining steps.

In order to obtain best results, it is advisable to align the 455 kc I.F.'s with the help of a cathode ray oscilloscope. The scope should be connected across the volume control. If this equipment is not available, use the method outlined below in the alignment chart.

ALIGNMENT CHART

ORDER OF ALIGNMENT		TEST OSCILLATOR				RECEIVER				
		CONNECT "HI" SIDE TO	CONNECT "LO" SIDE TO	DUMMY ANTENNA	FREQUENCY SETTING	RANGE SELECTOR	DIAL SETTING	CIRCUIT TO ADJUST	ADJUSTMENT SYMBOLS	NOTES
I.F. ALIGNMENT	1	Pin No. 1 6BA6	Gnd.	.1 Mfd.	455 KC		"Hi" End	2nd I.F. Trans.	Top and Bottom Slugs in T-2	Max. Out
	2	Pin No. 7 6BE6	Gnd.	.1 Mfd.	455 KC		Same	1st I.F. Trans.	Top and Bottom Slugs in T-1	Max. Out
R.F. ALIGNMENT	3	Ant.	Gnd.	22 MMF. in Series & 56 across	1600 KC		1600 KC	Osc.	C-6	Same
	4	Ant.	Gnd.	Same	1600 KC		1600 KC	Ant.	C-2	Same
	5	* Ant.	Gnd.	Same	1350 KC		1350 KC	Osc.	Osc. Coil Slug	Same
	6	Ant.	Gnd.	Same	1350 KC		1350 KC	Ant.	Ant. Coil Slug	Same

(1) NOTE: The oscillator coil slug has been pre-set in the factory and no further adjustment of this coil will be nesecsary unless the slug has been tampered with.

(2) NOTE: Final adjustments of C-1, must be made after the receiver has been installed and the antenna connected.

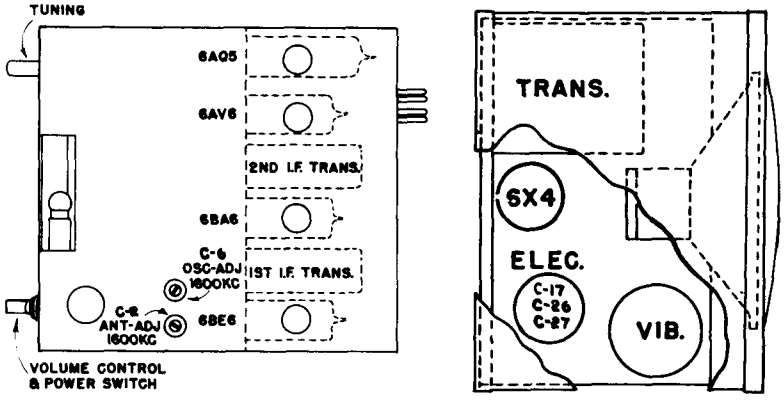

Fig. 1—Chassis Layout and Alignment Adjustment.

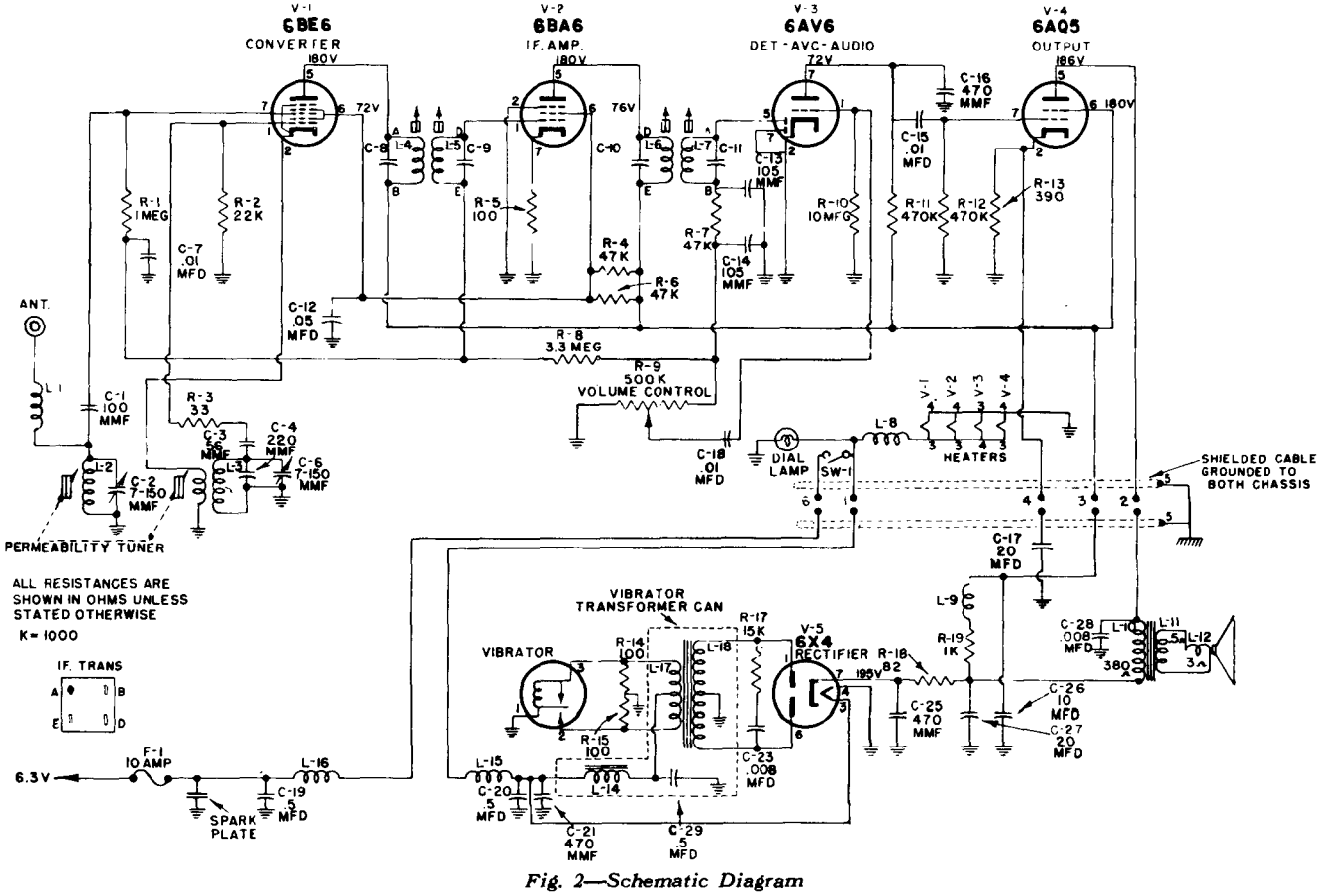

Fig. 2—Schematic Diagram

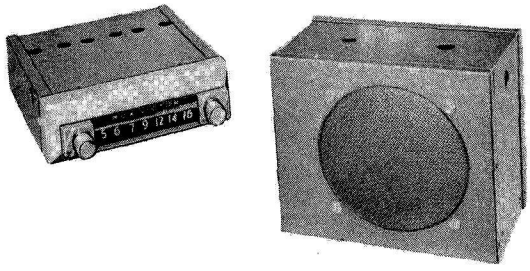

Model A558X

RCA VICTOR

AUTO RECEIVER
MODEL A558X
SERVICE DATA
— 1951 NO. 9 —

GENERAL SERVICE DIVISION
RCA VICTOR COMPANY, LTD.
MONTREAL, QUE.

REFER TO MODEL A558 SERVICE NOTE FOR ALIGNMENT & CHASSIS LAYOUTS

Electrical and Mechanical Specifications

Frequency Range ---------- 540—1600 KC
Intermediate frequency ---------- 455 KC
Tuning Ratio ---------- 5 to 1

TUBE COMPLEMENT

(1) 12BE6 ---------- Converter
(2) 12BA6 ---------- I.F. Amplifier
(3) 12AV6 ---------- 2nd Det., A.V.C. and 1st A.F.
(4) 6AQ5 ---------- Power Output
(5) 6X4 ---------- Rectifier

LOUDSPEAKER

Type ---------- 5 Inch round P.M.
V.C. Impedance ---------- 3.4 Ohms at 400 cycles

POWER SUPPLY

Source ---------- 12 Volts auto battery
Current drain ---------- 2.56 Amps.

POWER OUTPUT

Undistorted ---------- 2.0 Watts
Maximum ---------- 3.5 Watts

CABINET DIMENSIONS

	Height	Width	Depth
Radio Unit	1¾"	6"	7½"
Power Supply Unit	5½"	6⅜"	4⅛"

OPERATING CONTROLS

Left Knob ---------- Volume Control and Switch
Right Knob ---------- Tuning

REPLACEMENT PARTS FOR MODEL A558X

Insist on Genuine Factory Tested Parts, which are readily identified and may be purchased from Authorized Dealers.

Stock No.	DESCRIPTION
	TUNER UNIT ASSEMBLIES
S-4799	Capacitor - trimmer dual 7-150 MMF. (C2,C6)
45233	Capacitor - ceramic 100 MMF. 500 V. (C1)
S-6133	Capacitor - 220 MMF. 500 V. (C4)
S-4819	Capacitor - ceramic 470 MMF. 350 V. (C16)
S-4962	Capacitor - paper .01 Mfd. 400 V. (C-7)
73960	Capacitor - Hi K. .01 Mfd. (C15)
70615	Capacitor - paper .05 Mfd. 400 V. (C12)
S-5597	Capacitor - Elect. 20 Mfd. 500 V. (C17)
S-4523	Capacitor - 33 ohms 1/4 W. 56 MMF. 500 V. (R3, C3)
S-4614	Capristor, 47 K 1/4 W. 2-105 MMF. 500 V. (R7,C13,C14)
S-5606	Case - Tuner case
S-2987	Choke Coil (Ant.) (L-1)
S-6160	Choke Coil (Heater's) (L-8)
S-4313	Cord - dial cord
S-6116	Dial - dial scale
S-6117	Eyelet - for dial scale
S-5621	Knob - knobs for vol. & tuning
S-6168	Nose - tuner case nose
S-5553	Plug - Cable plug
S-6131	Pointer - dial pointer
34765	Resistor - 100 ohms, ± - 10% 1/2 W. (R5)
30498	Resistor 390 ohms, ± - 10% 1/2 W. (R-13)
30492	Resistor - 22,000 ohms ± - 10% 1/2 W. (R-2)
S-6174	Resistor - 47,000 ohms ± - 10% 1 W. (R4,R6)
30648	Resistor - 470,000 ohms ± - 10% 1/2 W. (R11,R12)
30652	Resistor - 1.0 Megohms ± -20% 1/2 W. (R1)
31417	Resistor - 3.3 Megohms ± -20% 1/2 W. (R8)
30992	Resistor - 10 Megohms ± -20% 1/2 W. (R10)
S-6110	Tuner
S-4487	Transformer - 1st I.F. transformer
S-5570	Transformer - 2nd I.F. transformer
S-6163	Volume Control (R9)

Stock No.	DESCRIPTION
	SPEAKER & POWER SUPPLY ASSEMBLY
S-4819	Capacitor - ceramic 470 MMF, 350 V. (C21,C25)
S-6136	Capacitor - paper .005 Mfd. 1600 V. (C23)
70630	Capacitor - paper .008 Mfd. 600 V. (C-28)
73960	Capacitor - Hi-K. .01 Mfd. (C24)
S-4196	Capacitor - paper .5 Mfd. 200 V. (C22, C-19, C-20)
S-5598	Capacitor - Elect. { 10 Mfd. 350 V. (C26) / 20 Mfd. 350 V. (C27)
S-6166	Case - power supply case
S-6167	Case - power supply case front cover
S-6161	Choke coil (L9)
S-5604	Cone - cone & voice coil assy
S-4883	Grille - speaker grille
S-6112	Lead - "A" lead assembly
S-5613	Resistor - 43 ohms ± - 10% 2 W. (R16)
13961	Resistors - 82 ohms ± - 10% 1/2 W. (R18)
S-6214	Resistor - 470 ohms ± - 10% 1/2 W. (R14,R15)
34766	Resistors, 1,000 ohms ± - 10% 1/2 W. (R19)
36714	Resistors, 15,000 ohms ± - 10% 1/2 W. (R17)
73117	Socket - tubes socket (less shield)
S-4860	Socket - tube socket (with shield)
13686	Socket - vibrators socket
S-5614	Socket - cable socket with shield
S-5004	Socket & cable assembly
S-5816	Speaker
S-3908	Transformer - output (L10,L11)
S-5602	Transformer - vibrator trans. (L17,L18)
S-5603	Vibrator (12 V.)
	MISCELLANEOUS ASSEMBLY
5025	Capacitor - Generator capacitor
5140	Fuse 5A
S-6177	Kit - Mounting Kit
S-4861	Lead - "A" lead (Fuse holder)
S-6213	Suppressor - Distributor suppressor

Only items listed under stock numbers are available as Replacement Parts.

All parts subject to change or withdrawal without notice.

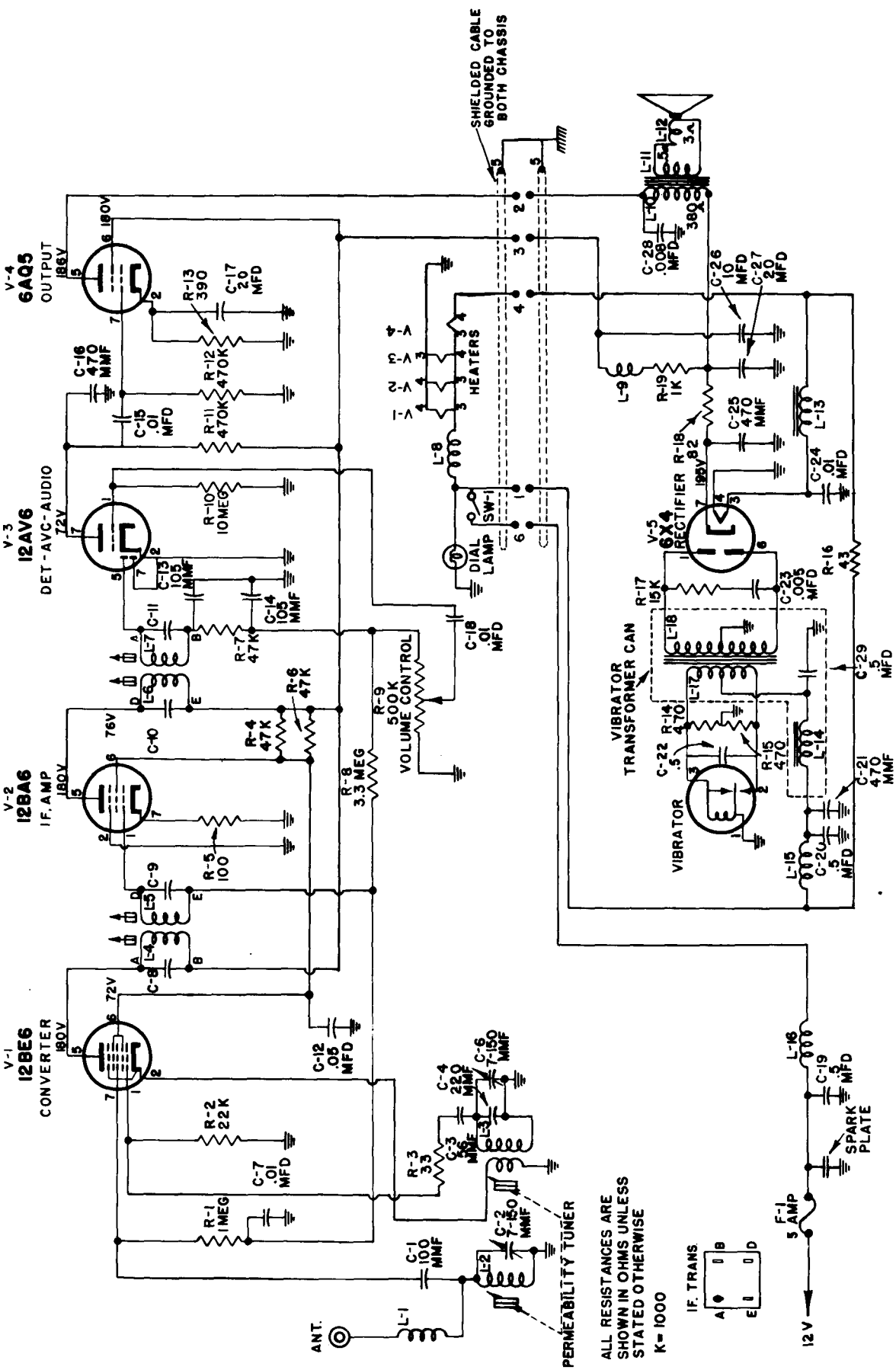

Fig. 2—Schematic Diagram



RCA VICTOR

AC-DC RADIO RECEIVER

MODEL X600 SERVICE DATA

—1950 NO. 16—

GENERAL SERVICE DIVISION
RCA VICTOR COMPANY LIMITED
MONTREAL, QUE.

Electrical and Mechanical Specifications

TUNING RANGE ----------540-1600 kc
INTERMEDIATE FREQUENCY ----------455 kc
TUBE COMPLEMENT
(1) RCA 6BJ6 ---------- R.F. Amplifier
(2) RCA 12SA7 ---------- Converter
(3) RCA 6BJ6 ---------- I-F Amplifier
(4) RCA 12SQ7 ----------Det.—A.V.C.—A-F Amp.
(5) RCA 50L6GT ---------- Output
(6) RCA 35Z5GT ---------- Rectifier
POWER SUPPLY RATING
115 volts a.c., 50 to 60 cycles or d.c.----------30 watts
POWER OUTPUT
Undistorted ---------- 1.1 watts
Maximum ---------- 1.75 watts

DIAL LAMPS (2)------Mazda type 1490, 3.2 volts, .16 amp.
LOUDSPEAKER
Size and Type ----------8 in. PM
Voice Coil Impedance----------3.2 ohms at 400 cycles
CABINET DIMENSIONS
Height----9¾" Width----12½" Depth----8⅜"
WEIGHT ---------- 10 lbs.
TUNING DRIVE RATIO --------9 to 1 (4½ turns of knob)

POWER SUPPLY POLARITY.—For operation on d.c., the power plug must be inserted in the outlet for correct polarity. If the set does not function, reverse the plug. On a.c., reversal of the plug may reduce hum.

REPLACEMENT PARTS FOR MODEL X600

Insist on Genuine Factory Tested Parts, which are readily identified and may be purchased from Authorized Dealers.

STOCK NO.	DESCRIPTION
	Chassis Assembly
	Capacitor, ceramic 2.2 MMF, 20% 350V (C-3A)
	" " 47 MMF, 10% 350V (C-1A)
	" " 56 MMF, 10% 350V (C-5A)
	" " 82 MMF, 10% 350V (C-11)
	" " 150 MMF, 20% 350V (C-7) (C-14)
	" paper .001 MFD, 20% 200V (C-9)
	" " .003 MFD, 20% 400V (C-10)
	" " .01 MFD, 10% 200V (C-12)
	" " .01 MFD, 10% 400V (C-15)
	" " .01 MFD, 10% 600V (C-17)
	" " .02 MFD, 10% 200V (C-20)
	" " .02 MFD, 20% 200V (C-13)
	" " .05 MFD, 20% 400V (C-8) (C-18)
	" " .1 MFD, 10% 400V (C-19) (C-6A)
*S-5768	" Electrolytic, 3 sections 1 - 40 MFD. (C-16A) 2 -120 MFD. (C-16C)
*S-5760	Condenser, Tuning Condenser (C1-C3-C5)
*S-5765	Coil - R.F. Coil (T-1)
*S-5764	Coil - Oscillator Coil (L3)
*S-5766	Control - Volume Control 1.5 Meg. (R-10)
*S-5771	Resistor, Fuss Type - 33 ohms, 20% (R-16)
	" , 150 Ohms 10% ½ Watt (R-14)
	" , 220 Ohms 20% ½ Watt (R-2A)
	" 330 Ohms 20% ½ Watt (R-17)
	" 1000 Ohms 10% 1 Watt (R-15)
	" 12000 Ohms 10% ½ Watt (R-3)
	" 18000 Ohms 10% ½ Watt (R-19)
	* Indicates new stock items

STOCK NO.	DESCRIPTION
	Speaker Assembly
	" 22000 Ohms 20% ½ Watt (R-2)
	" 27000 Ohms 10% ½ Watt (R-9)
	" 56000 Ohms 10% ½ Watt (R-4)
	" 220000 Ohms 20% ½ Watt (R-12) (R-18)
	" 470000 Ohms 20% ½ Watt (R-13) (R-7)
	" 1.0 Megohm 10% ½ Watt (R-8)
	" 3.3 Megohm 20% ½ Watt (R-5)
	" 10 Megohm 20% ½ Watt (R-11)
*S-5761	Transformer, 1st I.F. Trans. (T-2)
*S-5762	" 2nd I.F. Trans. (T-3)
*S-5767	" Output Trans. (T-4)
*S-5822	Speaker (8 inches) Speaker Assembly
*S-5772	Cone - Cone & Voice Coil Assy.
	Miscellaneous Assemblies
*S-5752	Bezel
*S-5823	Cover - back cover less loop
*S-5769	Cover & loop
*S-5749	Cabinet
*S-5753	Dial - dial scale
*S-5754	Dial Clip - R.H.
*S-5755	" " - L.H.
*S-5757	Decalcomania
*S-5758	Grille cloth assy.
*S-5750	Knob Assy. (Tone - Phono)
*S-5751	Knob Assy. (Tuning - Volume)
*S-5824	Loop-Loop less back cover
*S-5759	Monogram
*S-5756	Nut, Speed nut
*S-5770	Pointer, Station Selector pointer
*S-5763	Switch, - Tone & power switch

Only items listed under stock numbers are available as Replacement Parts.

All parts and prices subject to change or withdrawal without notice.

Alignment Procedure

CRITICAL LEAD DRESS

1. Dress all heater leads down to chassis and away from all audio grid and plate wiring.
2. Dress power cord to back apron and away from phono jack.
3. Dress capacitor C18 against back apron.
4. Connect shielded capacitor C13 direct and with a minimum of exposed leads.
5. Dress dial lamp leads on top of chassis.
6. Dress output transformer leads down to chassis.
7. Dress excess loop leads away from tubes and clear of tuning condenser.

TEST-OSCILLATOR.—For all alignment operations, connect the low side of the test-oscillator to the receiver chassis, and keep the oscillator output as low as possible to avoid a-v-c action.

On AC operation an isolation transformer (115v./115 v.) may be necessary for the receiver if the test oscillator is also AC-DC operated.

DIAL CALIBRATION

With the tuning condenser fully meshed, the dial pointer should be set to the first score mark at the left-hand end of the dial back plate. The four score marks represent: Max. cap. 600 kc 1600 kc min. cap.

ALIGNMENT CHART

Order of Alignment		TEST OSCILLATOR				RECEIVER				
		Connect "HI" Side to	Connect "LOW" Side to	Dummy Antenna	Frequency Setting	Range Selector	Receiver Dial Setting	Circuit To Adjust	Adjustment Symbols	Notes
I.F. Alignment	1-	V3 6BJ6 Pin #1	GND	"	455KC	S.B.	"L.H." of Dial	2nd IF. T3	Top & Bottom	Max-Out
	2-	V2 12SA7 Pin #8	"	"	"	"	"	1st IF. T2	"	"
R.F. Alignment	3-	Ant. Terminal	"	220 ohms	580KC	"	580KC	Oscillator & RF. Stage	L2 Core T1 Core	"
	4-	"	"	"	1600KC	"	"RH" of Dial	Osc. Trim.	C6	"
	5-	"	"	"	"	"	1500KC	R.F. Stage Ant. & R.F. Trim.	C4 & C2	"
	6-	Repeat Steps 3, 4 & 5.								

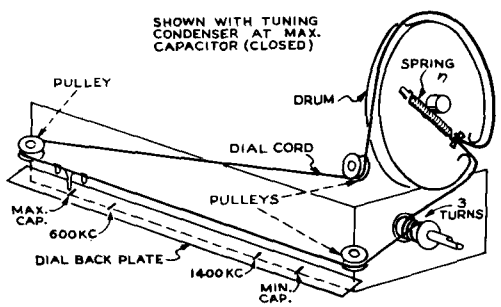

Dial Indicator and Drive Cord

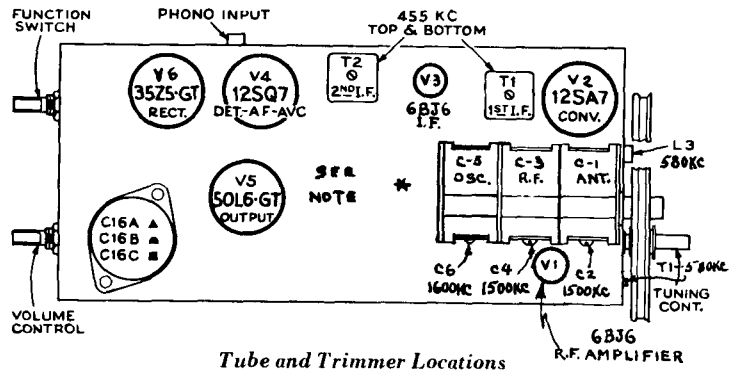

Tube and Trimmer Locations

NOTE: On later productions the antenna section of the gang condenser will be interchanged with the oscillator section.

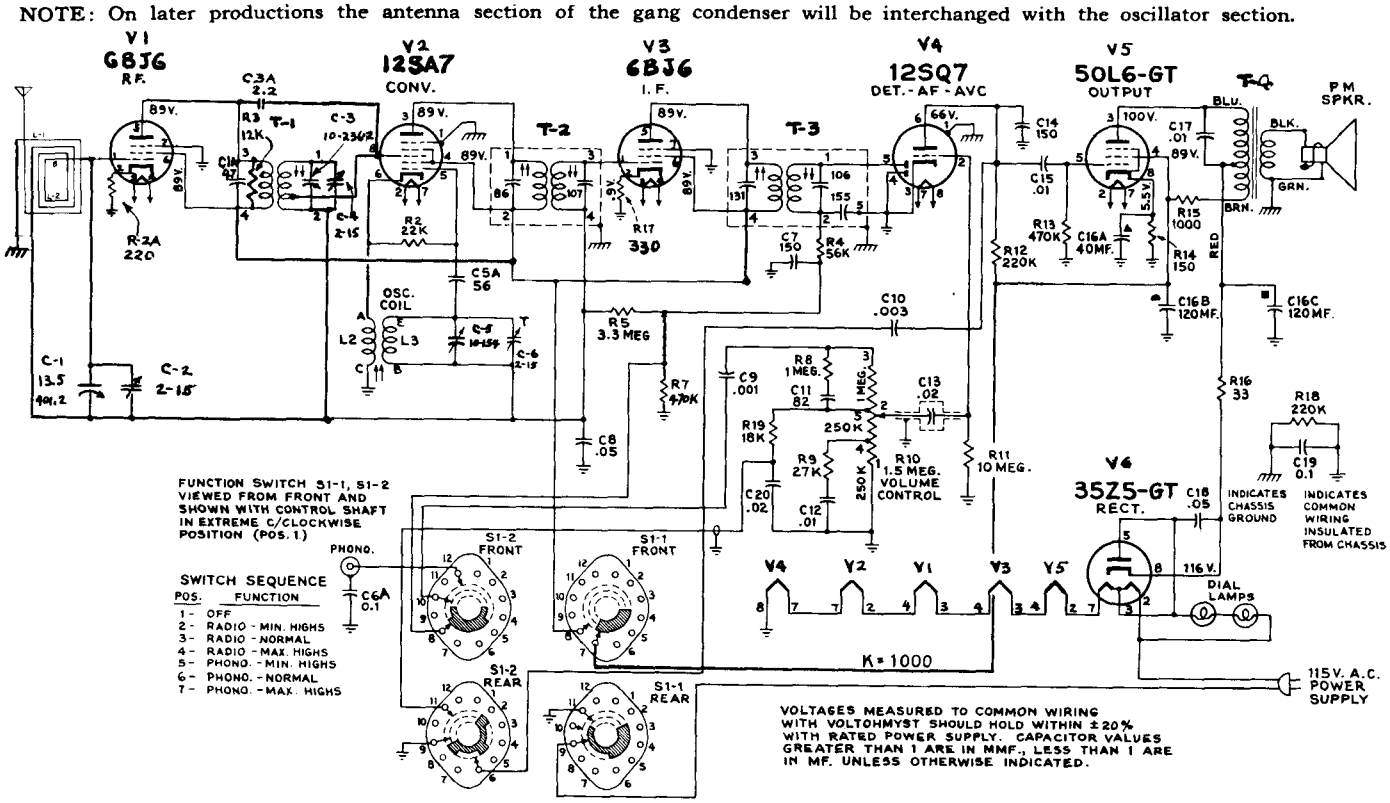

Schematic Circuit Diagram

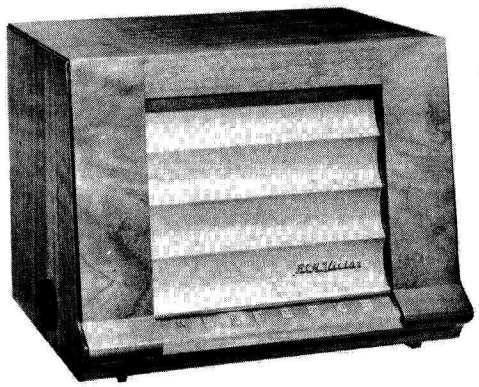

RCA VICTOR

AC-DC RADIO RECEIVER

MODEL X602 SERVICE DATA

—1952 NO. 6—

HEAD OFFICE SERVICE DEPARTMENT
RCA VICTOR COMPANY, LTD.
MONTREAL, QUE.

Electrical and Mechanical Specifications

TUNING RANGE ----------540-1600 kc
INTERMEDIATE FREQUENCY ----------455 kc
TUBE COMPLEMENT
(1) RCA 6BJ6 ---------- R.F. Amplifier
(2) RCA 12SA7 ---------- Converter
(3) RCA 6BJ6 ---------- I-F Amplifier
(4) RCA 12SQ7 ----------Det.—A.V.C.—A-F Amp.
(5) RCA 50L6GT ---------- Output
(6) RCA 35Z5GT ---------- Rectifier
POWER SUPPLY RATING
115 volts a.c., 50 to 60 cycles or d.c.----------30 watts
POWER OUTPUT
Undistorted ---------- 1.1 watts
Maximum ---------- 1.75 watts

DIAL LAMPS (2)------Mazda type 1490, 3.2 volts, 16 amp.
LOUDSPEAKER
Size and Type ----------8 in. PM
Voice Coil Impedance----------3.2 ohms at 400 cycles
CABINET DIMENSIONS
Height----9¾" Width----12½" Depth----8⅜"
TUNING DRIVE RATIO --------9 to 1 (4½ turns of knob)

POWER SUPPLY POLARITY.—For operation on d.c., the power plug must be inserted in the outlet for correct polarity. If the set does not function, reverse the plug. On a.c., reversal of the plug may reduce hum.

REPLACEMENT PARTS FOR MODEL X602

Insist on Genuine Factory Tested Parts, which are readily identified and may be purchased from Authorized Dealers.

STOCK NO.	DESCRIPTION
	Chassis Assembly
	Capacitor, ceramic 2.2 MMF, 20% 350V (C-3A)
	" " 47 MMF, 10% 350V (C-1A)
	" " 56 MMF, 10% 350V (C-5A)
	" " 82 MMF, 10% 350V (C-11)
	" " 150 MMF, 20% 350V (C-7) (C-14)
	" paper .001 MFD, 20% 200V (C-9)
	" " .003 MFD, 20% 400V (C-10)
	" " .01 MFD, 10% 200V (C-12)
	" " .01 MFD, 10% 400V (C-15)
	" " .01 MFD, 10% 600V (C-17)
	" " .022 MFD, 10% 200V (C-20)
	" " .02 MFD, 20% 200V (C-13)
	" " .047 MFD, 20% 400V (C-8) (C-18)
	" " .1 MFD, 10% 400V (C-19) (C-6A)
S-5768	" Electrolytic, 3 sections 1 - 40 MFD. (C-16A) 2 -120 MFD. (C-16B) (C-16C)
S-5760	Condenser, Tuning Condenser (C1-C3-C5)
S-5765	Coil - R.F. Coil (T-1)
S-5764	Coil - Oscillator Coil (L3)
S-5766	Control - Volume Control 1.5 Meg. (R-10)
S-5771	Resistor, Fuss Type - 33 ohms, 20% (R-16)
	" , 150 Ohms 10% ½ Watt (R-14)
	" , 220 Ohms 20% ½ Watt (R-2A)
	" 330 Ohms 20% ½ Watt (R-17)
	" 1000 Ohms 10% 1 Watt (R-15)
	" 12000 Ohms 10% ½ Watt (R-3)
	" 18000 Ohms 10% ½ Watt (R-19)
	" 22000 Ohms 20% ½ Watt (R-2)
	" 27000 Ohms 10% ½ Watt (R-9)
	" 56000 Ohms 10% ½ Watt (R-4)
	" 220000 Ohms 20% ½ Watt (R-12) (R-18)
	" 470000 Ohms 20% ½ Watt (R-13) (R-7)
	" 1.0 Megohm 10% ½ Watt (R-8)
	" 3.3 Megohm 20% ½ Watt (R-5)
	" 10 Megohm 20% ½ Watt (R-11)
S-5761	Transformer, 1st I.F. Trans. (T-2)
S-5587	" 2nd I.F. Trans. (T-3)
S-5767	" Output Trans. (T-4)
	Speaker Assembly
S-5822	Speaker (8 inches)
S-5772	Cone - Cone & Voice Coil Assy.
	Miscellaneous Assemblies
S-3467	Cord - Power Cord
*S-6702	Cover - back cover less loop
*S-6701	Cover & loop
*S-6703	Dial back plate assy.
*S-6705	Dial - dial scale
S-5757	Decalcomania
S-5661	Emblem "RCA Victor"
*S-6707	Grille assy.
*S-6706	Grille cloth assy.
*S-6709	Knob assy (Tone - Phono)
*S-6708	Knob assy (Tuning - Volume)
*S-6700	Loop - Loop less back cover
*S-6704	Pointer - Station selector pointer
S-5763	Switch - Tone & power switch

* Indicates new stock items

Only items listed under stock numbers are available as Replacement Parts.

All parts and prices subject to change or withdrawal without notice.

Alignment Procedure

CRITICAL LEAD DRESS

1. Dress all heater leads down to chassis and away from all audio grid and plate wiring.
2. Dress power cord to back apron and away from phono jack.
3. Dress capacitor C18 against back apron.
4. Connect shielded capacitor C13 direct and with a minimum of exposed leads.
5. Dress dial lamp leads on top of chassis.
6. Dress output transformer leads down to chassis.
7. Dress excess loop leads away from tubes and clear of tuning condenser.

TEST-OSCILLATOR.—For all alignment operations, connect the low side of the test-oscillator to the receiver chassis, and keep the oscillator output as low as possible to avoid a-v-c action.

On AC operation an isolation transformer (115v./115 v.) may be necessary for the receiver if the test oscillator is also AC-DC operated.

DIAL CALIBRATION

With the tuning condenser fully meshed, the dial pointer should be set to the first score mark at the left-hand end of the dial back plate. The four score marks represent: Max. cap. 600 kc 1600 kc min. cap.

ALIGNMENT CHART

Order of Alignment		TEST OSCILLATOR				RECEIVER				
		Connect "HI" Side to	Connect "LOW" Side to	Dummy Antenna	Frequency Setting	Range Selector	Receiver Dial Setting	Circuit To Adjust	Adjustment Symbols	Notes
I.F. Alignment	1-	V3 6BJ6 Pin #1	GND	"	455KC	S.B.	"L.H." of Dial	2nd IF. T3	Top & Bottom	Max-Out
	2-	V2 12SA7 Pin #8	"	"	"	"	"	1st IF. T2	"	"
R.F. Alignment	3-	Ant. Terminal	"	220 ohms	580KC	"	580KC	Oscillator & RF. Stage	L3 Core T1 Core	"
	4-	"	"	"	1600KC	"	"RH" of Dial	Osc. Trim.	C6	"
	5-	"	"	"	"	"	1500KC	R.F. Stage Ant. & R.F. Trim.	C4 & C2	"
	6-	Repeat Steps 3, 4 & 5.								

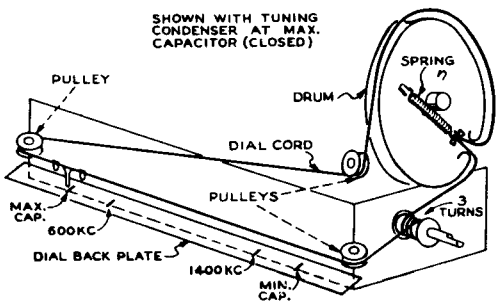

Dial Indicator and Drive Cord

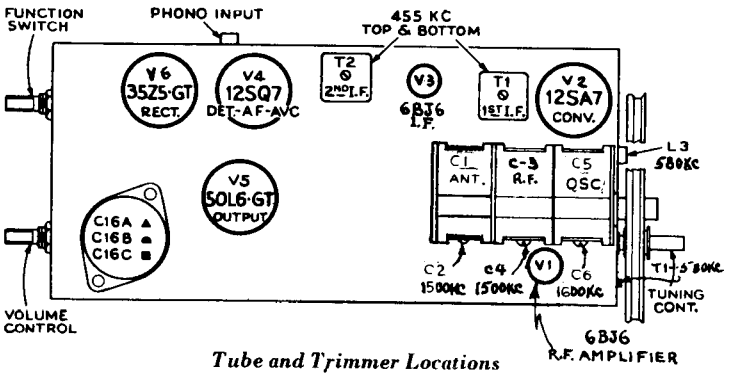

Tube and Trimmer Locations

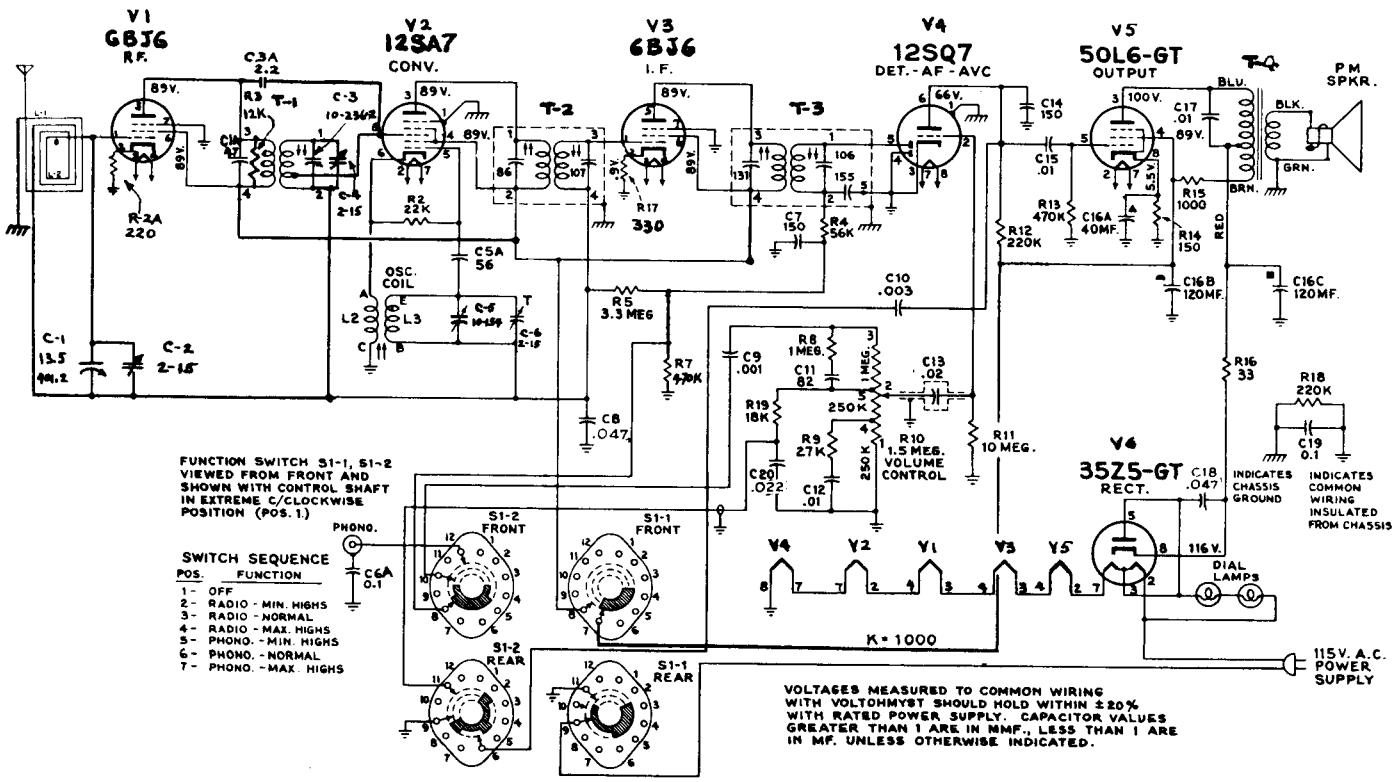

Schematic Circuit Diagram

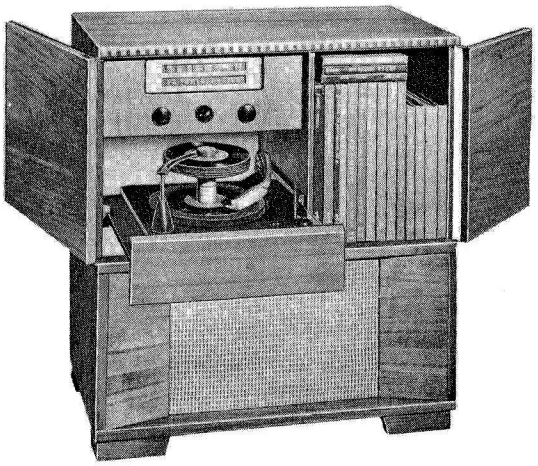

MODEL V-607

RCA VICTOR

RADIO PHONOGRAPH COMBINATION

Model V607

SERVICE DATA

— 1952 No. 13 —

HEAD OFFICE SERVICE DEPARTMENT
RCA VICTOR COMPANY, LTD
MONTREAL, QUE.

ELECTRICAL AND MECHANICAL SPECIFICATIONS

TUNING RANGE

Standard Broadcast	540-1600 KC.
Short Wave	5.8-19.6 MC.
I.F.	455 KC.

TUBE COMPLEMENT

1.	R.C.A. 6BJ6	R.F.
2.	R.C.A. 12BE6	Converter
3.	R.C.A. 12SK7	I.F. Amp.
4.	R.C.A. 12AV6	Audio, Det. A.V.C.
5.	R.C.A. 6C4	Ph. Inverter
6.	R.C.A. 35L6GT	Output
7.	R.C.A. 35L6GT	Output
Rectifier		Selenium
Dial Lamps (3)		Mazda 1813
Tuning Ratio Drive		11.1 (5½ Turns of Knob)

POWER SUPPLY RATING

Rating A ---- 105-125 Volts, 25 cycles, .55 amps. 63 watts
Rating B ---- 105-125 Volts, 60 cycles, .55 amps. 63 watts

LOUDSPEAKER

Size and Type	12" P.M.
Voice coil impedance	3.2 ohms at 400 cycles

POWER OUTPUT

Undistorted	2.5 watts
Maximum	3.5 watts

RECORD CHANGER

RECORD CHANGER		124196 Series
Turntable Speed		33⅓, 45 or 78 r.p.m.
Record capacity		Up to 14 seven inch
	or	12 ten inch
		10 twelve inch
	or	10 ten and twelve inch intermixed

CABINET DIMENSIONS

Height	31"
Width	29¾"
Depth	15 9/16"

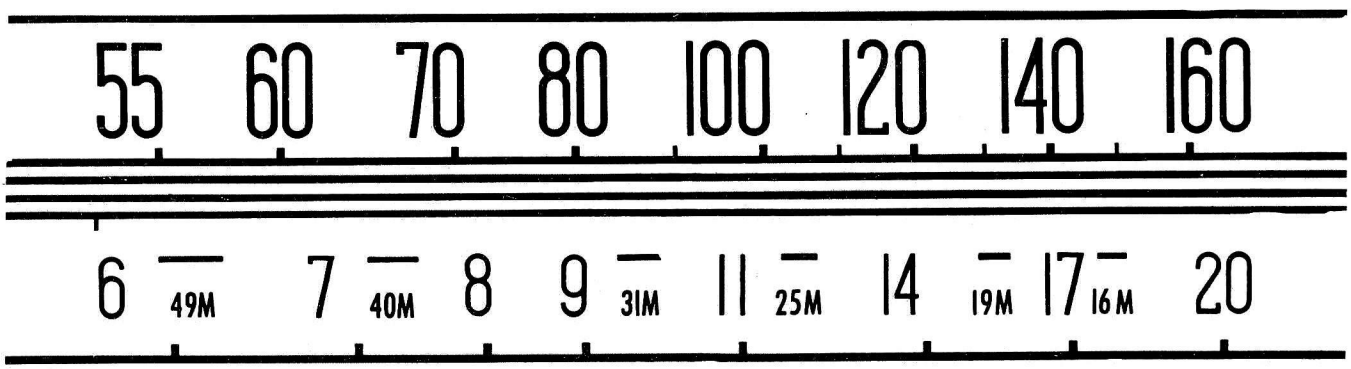

FIG. 1 DIAL SCALE V-607

The Dial Scale Drawing shown is a full size reproduction. It can be used as a reference in alignment procedure.

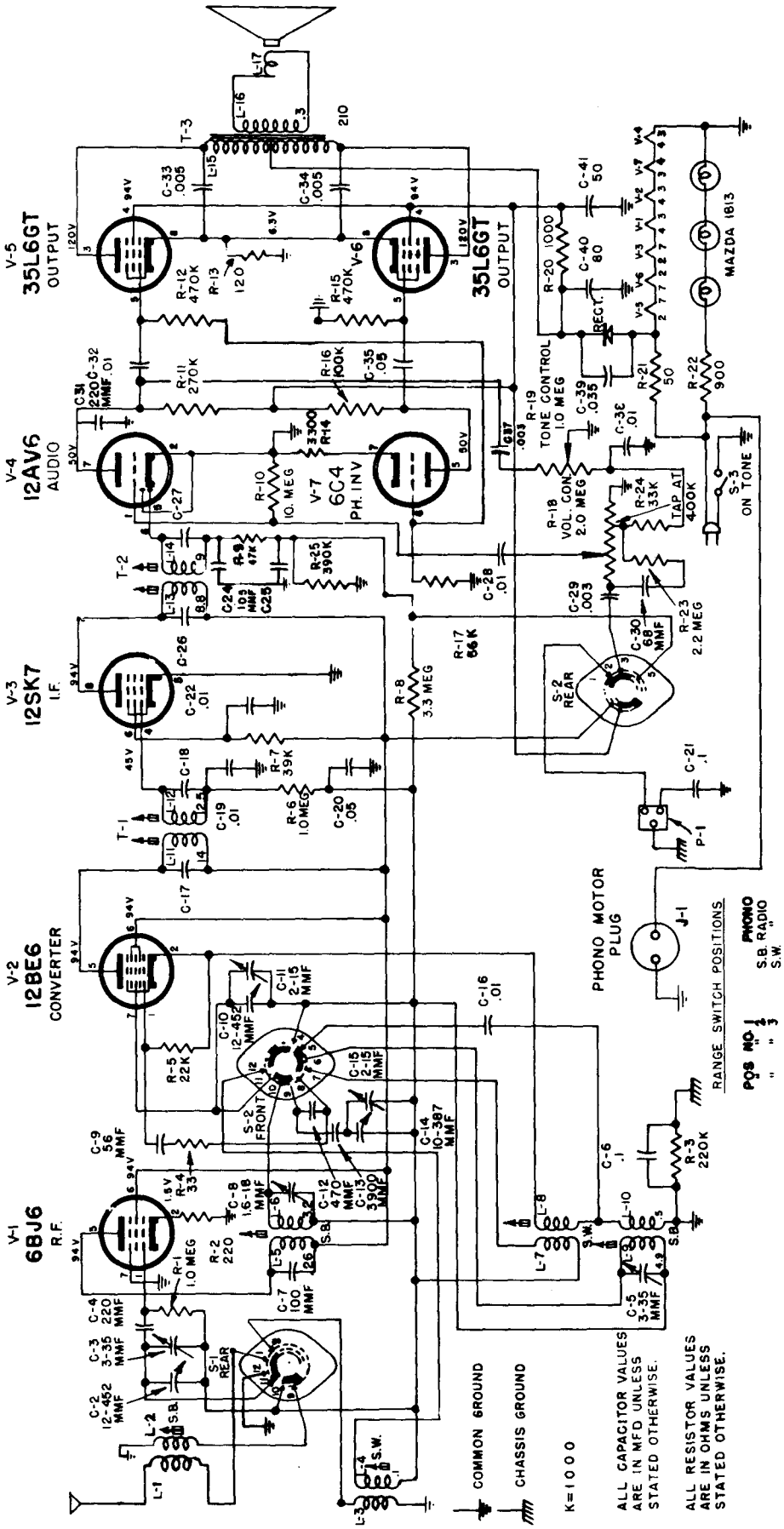

FIG. 2 SCHEMATIC DIAGRAM

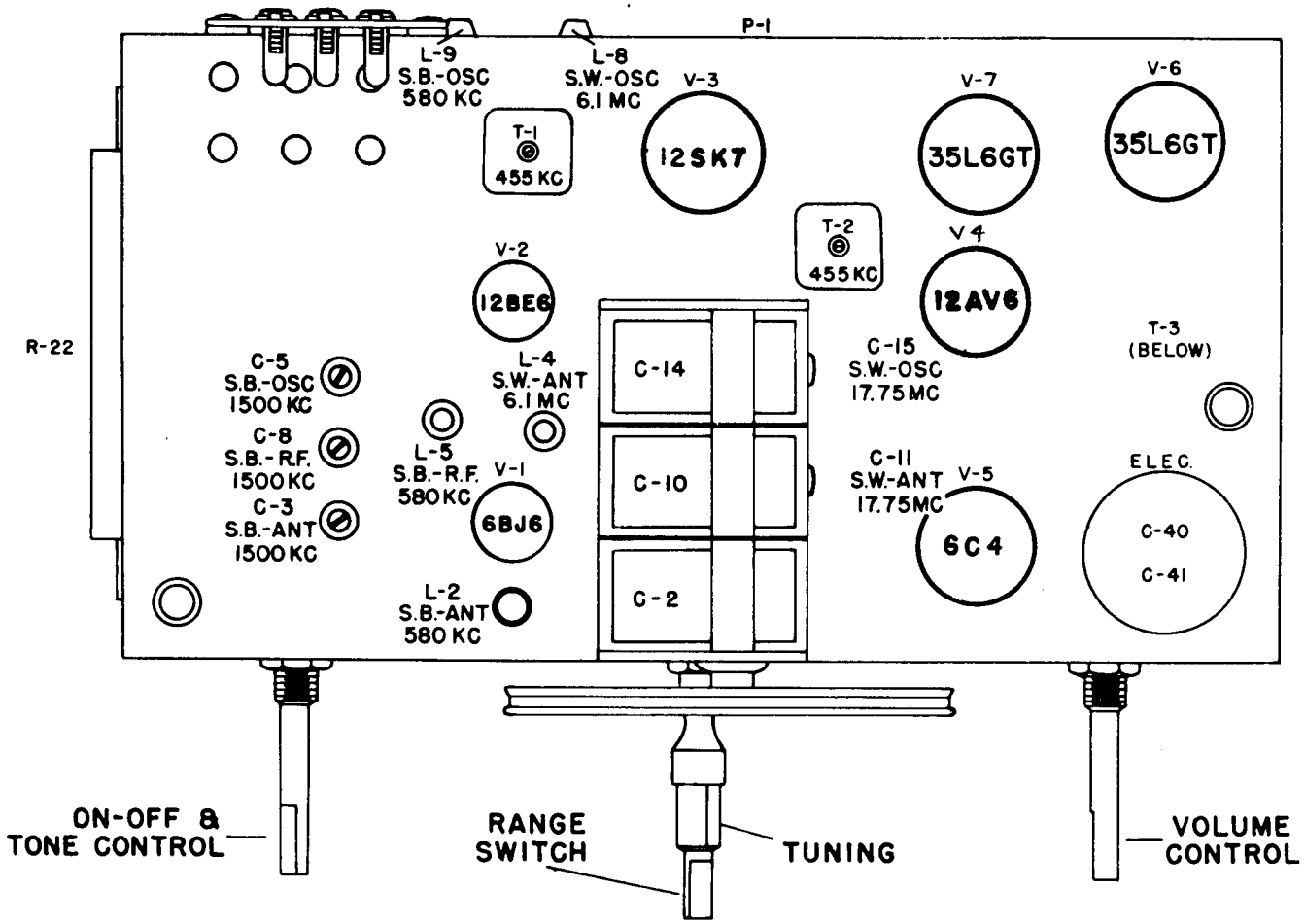

FIG. 3 CHASSIS LAYOUT AND ALIGNMENT ADJUSTMENT.

ALIGNMENT PROCEDURE

Before aligning the receiver, set the gang condenser for maximum capacity and then set the dial cursor on the calibration point at the extreme left hand end of the dial.

When only a portion of the circuit is to be aligned select the required portion and perform all the remaining steps.

In order to obtain best results, it is advisable to align the 455 KC I.F.'s with the help of a cathode ray oscilloscope. The scope should be connected across the volume control. If this equipment is not available, use the method outlined below in the alignment chart.

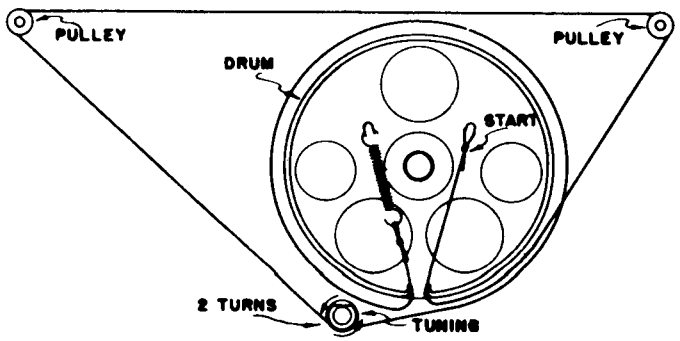

Fig. 4—Diel Cord Stringing

ALIGNMENT CHART

		TEST OSCILLATOR				RECEIVER				
		CONNECT "HI" SIDE TO	CONNECT "LO" SIDE TO	DUMMY ANTENNA	FREQUENCY SETTING	RANGE SELECTOR	DIAL SETTING	CIRCUIT TO ADJUST	ADJUSTMENT SYMBOLS	NOTES
I.F. ALIGNMENT	1	Pin #4 12SK7	Gnd.	.1 mfd	455 KC	S.B.	"HI" END	T-2 2nd I.F. Trans.	Top & Bottom Slugs	Max. Out.
	2	Pin #7 12BE6	Same	Same	Same	Same	Same	T-1 1st I.F. Trans.	Top & Bottom Slugs	Same
	3	Repeat steps 1 & 2.								
S.W. ALIGNMENT	4	Ant. Ter. BRD #1	Gnd.	300 ohms	17.75 Mc	S.W.	17.75 Mc.	Osc.	C-15	Same
	5	Same	Same	Same	17.75 Mc	Same	17.75 Mc	Ant.	C-11	Same
	6	Same	Same	Same	6.1 Mc	Same	6.1 Mc	Osc.	L-8	Same
	7	Same	Same	Same	6.1 Mc	Same	6.1 Mc	Ant.	L-4	Same
	8	Repeat steps 4 to 7.								
S.B. ALIGNMENT	9	"HI" Side of Loop	Same	10 mmf	1500 Kc	S.B.	1500 Kc	C-5 C-8 C-3	Osc. R.F. Ant.	Same
	10	Same	Same	Same	580 Kc	Same	580 Kc	L-9 L-5 L-2	Osc. R.F. Ant.	Same
	11	Repeat steps 9 to 10.								

REPLACEMENT PARTS FOR MODEL V-607

Insist on Genuine Factory Tested Parts, which are readily identified and may be purchased from Authorized Dealers.

STOCK NO.	DESCRIPTION
	CHASSIS ASSEMBLIES
S-5966	Capacitor, trimmer 3-35 MMF (C-3)
S-6553	" " dual (3-35, 1.6-18 MMF) (C-5,C-8
S-4523	Capristor, 56 MMF., 33 ohms (C-9, R-4) (C-30)
S-6215	Capacitor, ceramic, 68 MMF. 10%, 500V. (C-7)
73152	" " 100 MMF, 20%,500V. (C-24, C-25, R-9)
S-4614	Capacitor, 2-105 MMF., 47000 ohms
S-5940	Capacitor, ceramic 220 MMF. 20%. 350 V. (C-4,C-31)(C-12)
S-6190	Capacitor, Mica 470 MMF., 5%, 500 V. (C-13)
S-6216	" " 3900 MMF., 5%, 500 V.
	" .003 Mfd. 20%, 200V. (C-29)
	" .005 Mfd. 10%, 600 V. (C-33, C-34) (C-19,C-28)(C-38)
	" .01 Mfd. 10%, 200 V.
	" .01 Mfd. 20%, 200 V. C-16)
	" .01 Mfd. 20%, 400 V. (C-22, C-32)
	" .035 Mfd. 10%, 400V. (C-39)
	" .05 Mfd. 20%, 200 V. (C-20)
	" .05 Mfd. 20%, 400 V. (C-35)
	" .1 Mfd. 10%, 400 V. (C-6, C-21)
S-5703	" - Electrolytic 50 - 80 Mfd. 150 V. (C-40, C-41)
S-6235	Coil - S.B. Ant. coil (L-1, L-2)
S-6182	" S.B. R.F. coil (L-5, L-6)
S-6264	" - S.B. Osc. coil (L-9, L-10)
S-6183	" - S.W. Ant. coil (L-3, L-4)
S-6184	" - S.W. Osc. coil (L-7, L-8)
S-6186	Condenser - Gang condenser (C-2, C-10, C-11, C-14, C-15)
S-6681	Control - Volume Control (R-18)
S-5920	" - Tone control (R-19)(S-3)
S-6217	Rectifier - Selenium
	Resistor - 50 ohms + 10% & 5%
	Resistor - 120 ohms 10% 1 W. (R-13)
	" - 220 " 20% ½ W. (R-2)
S-6236	" - 900 " 10 W. (R-22)
	" - 1,000 " 10% 1 W. (R-20)
	" - 22,000" 20% ½ W. (R-5)

STOCK NO.	DESCRIPTION
	Chassis Assembly (Cont'd)
	" - 33,000" 10% ½ W. (R-24)(R-14)
	" - 39,000" 10% ½ W. (R-7)
	" - 220,000 ohms 20% ½ W. (R-3)
	" - 270,000 " 10% ½ W. (R-11, R-16)
	" - 390,000 " 10% ½ W. (R-25)
	" - 470,000 " 10% ½ W. (R-15)
	" - 470,000 " 20% ½ W. (R-12)
	" - 1.0 Megohm 20% ½ W. (R-1, R-6)
	" - 2.2 " 10% ½ W. (R-23)
	" - 3.3 " 20% ½ W. (R-8)
	" - 10 " 20% ½ W. (R-10, R-17)
*S-6728	Switch - Range switch (S-1)
S-4487	Transformer - 1st I.F. transformer (T-1)
S-6192	" - 2nd I.F. " (T-2)
S-6187	" - Output " (T-3)
	SPEAKER ASSEMBLY
*S-6787	Speaker 12" P.M.
*S-6823	Cone - Cone & voice coil assy (L-17)
	MISCELLANEOUS ASSEMBLIES
S-6551	Back - cabinet back (wal-mah.)
S-6552	" - " " (blonde)
S-6290	Decalcommanias
S-5558	Monogram (RCA Victor)
S-4313	Dial Cord
S-4403	Dial clamps
S-6193	Dial Scale
S-6180	Dial Plate Assy
S-6239	Door Pulls
S-6679	Grille Cloth (Wal.-Mah.)
S-6680	" " (blonde)
S-5275	Knot Assy. (Mah.) (Tuning)
S-4390	" " (Wal.) "
S-5276	" " (Blonde) "
S-5277	" " (Mah.) (Range)
S-4387	" " (Wal.) "
S-5278	" " (Blonde) "
S-5279	" " (Mah.) Vol. & Tone
S-3870	" " (Wal.) " "
S-5280	" " (Blonde) " "
	Lamps - dial & pilot lamps (3)
S-5272	Pointer - dial pointer

* INDICATES NEW STOCK ITEMS

Only items listed under stock numbers are available as Replacement Parts.
All parts subject to change or withdrawal without notice.



MODEL V610

RCA VICTOR

"HIS MASTER'S VOICE"

RADIO PHONOGRAPH COMBINATION

Model V610

SERVICE DATA

— 1952 No. 7 —

HEAD OFFICE SERVICE DEPARTMENT
RCA VICTOR COMPANY, LTD
MONTREAL, QUE.

ELECTRICAL AND MECHANICAL SPECIFICATIONS

TUNING RANGE

Standard Broadcast	540-1600 KC.
Short Wave	5.8-19. MC.
Intermediate Frequency	455 KC.

TUBE COMPLEMENT

1.	Type 6BA6	R.F. Amp.
2.	Type 6BE6	Converter
3.	Type 6BA6	I.F. Amp.
4.	Type 6AV6	Det. A.V.C. Audio
5.	Type 6C4	Driver
6.	Type 6V6GT	Output
7.	Type 6V6GT	Output
8.	Type 6C4	Phase Inv.
9.	Type 5V3GT	Rectifier
10.	Type 6U5	Magic Eye

Dial Lamp (2)	Mazda 44
Pilot Lamp	Mazda 51
Tuning Drive Ratio	16:1

POWER SUPPLY RATING

Rating A-105-125 Volts, 60 cycles, .8 amps.	115 watts
Rating B-105-125 Volts, 25 cycles, .8 amps.	115 watts

POWER OUTPUT

Undistorted	8.5 watts
Maximum	10.5 watts

LOUDSPEAKER

Type	12" P.M.
Voice coil impedance	3.2 ohms at 400 cycles

PHONOGRAPH (124196 Series)

Turntable Speed	33⅓, 45, & 78 R.P.M.
Record capacity	Up to 14-seven inch
or	12-ten inch
	10-twelve inch
	10-twelve and ten inch intermixed

CABINET DIMENSIONS

Height	34"
Width	32"
Depth	16½"

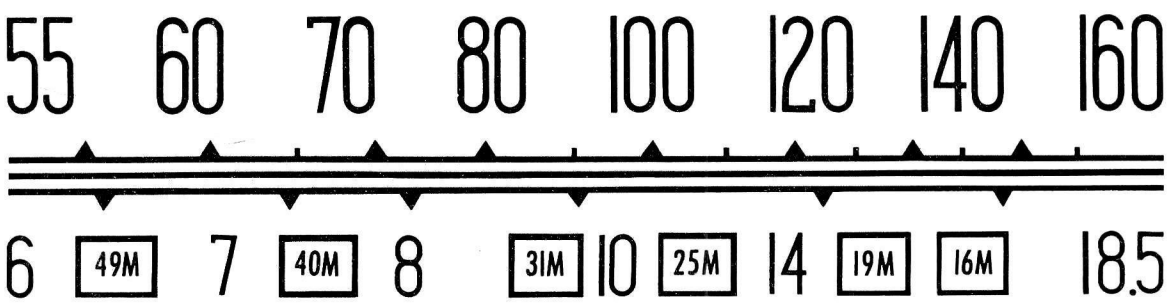

FIG. 1 DIAL SCALE DRAWING (Full Scale)

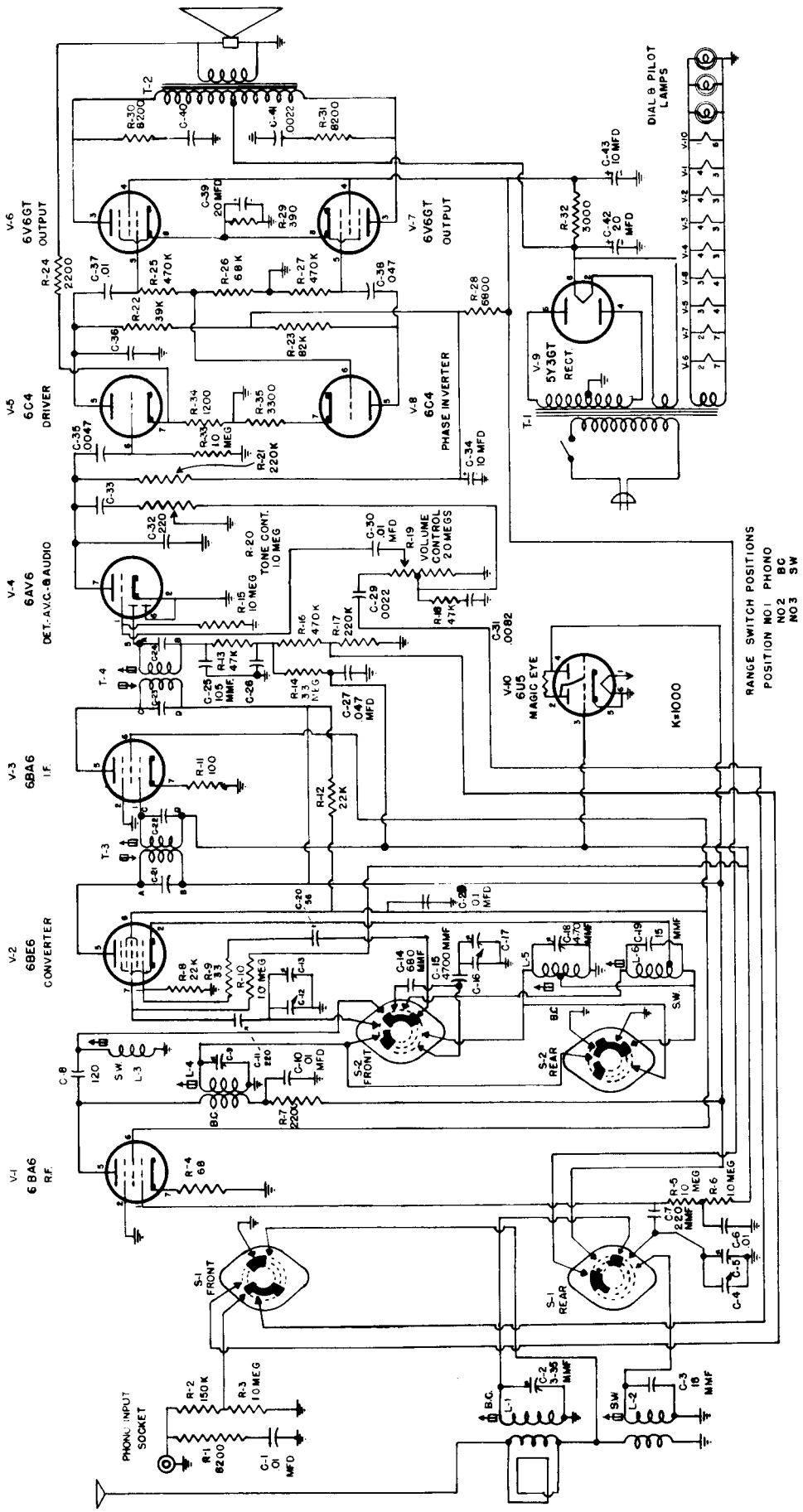

FIG. 2 SCHEMATIC DIAGRAM

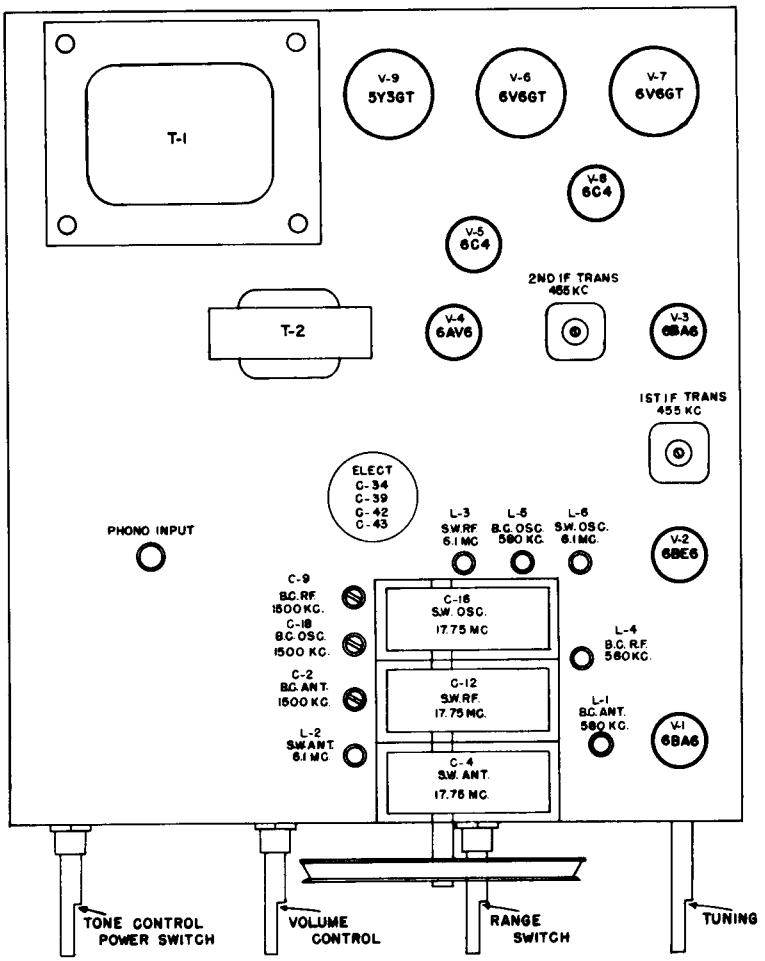

FIG. 3 CHASSIS ASSEMBLY

CRITICAL LEAD DRESS

Dress all B+ Leads from filter capacitor away from A.V.C. + Det.- audio tube V-4

ALIGNMENT PROCEDURE

Before aligning the receiver, set the gang condenser for maximum capacity and then set the dial cursor on the calibration point at the extreme left hand end of the dial.

When only a portion of the circuit is to be aligned select the required portion and perform all the remaining steps.

In order to obtain best results, it is advisable to align the 455 KC I.F.'s with the help of a cathode ray oscilloscope. The scope should be connected across the volume control. If this equipment is not available, use the method outlined below in the alignment chart.

ALIGNMENT CHART

Order of Alignment		TEST OSCILLATOR				RECEIVER				
		Connect "HI" Side To	Connect "LO" Side To	Dummy Antenna	Frequency Setting	Range Selector	Receiver Dial Setting	Circuit To Adjust	Adjustment Symbols	Notes
I.F. Alignment	1	V-3, 6BA6 Pin #1	GND	.1 MFD	455KC	S.B.	'HI' End	2nd I.F. Trans.	T-4 Top & Bottom	Max. Out.
	2	V-2, 6BE6 Pin #7	Same	Same	Same	Same	Same	1st I.F. Trans.	T-3 Top & Bottom	Same
	3	Repeat Steps 1 & 2								
S.W. Alignment	4	Ant Green Lead	GND	300 OHMS	6.1 MC	S.W.	6.1 MC	S.W. OSC " RF " ANT	L-6 L-3 L-2	Same
	5	Same	Same	Same	17.75 MC	Same	17.75 MC	S.W. OSC S.W. RF S.W. ANT	C-17 C-13 C- 4	Same
	6	Repeat Steps 4 & 5								
S.B. Alignment	7	Ant Blue Lead	GND	10 MMF	580 KC	S.B.	580 KC	S.B. OSC S.B. RF S.B. ANT	L-5 L-4 L-1	Same
	8	Same	Same	Same	1500 KC	Same	1500 KC	S.B. OSC S.B. RF S.B. ANT	C-18 C- 9 C- 2	Same
	9	Repeat Steps 7 & 8								

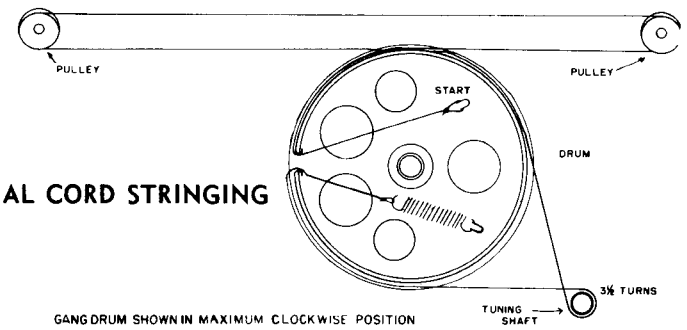

FIG. 4 DIAL CORD STRINGING

REPLACEMENT PARTS FOR MODEL V-610

Insist on Genuine Factory Tested Parts, which are readily identified and may be purchased from Authorized Dealers.

SYMBOL	STOCK NO.	DESCRIPTION
		CHASSIS ASSEMBLY
C-1		Capacitor, .01 mfd, 20%, 400V
C-2	S-5093	Capacitor, 3-35 mmf, 500V
C-3	36463	Capacitor, 18 mmf, 10%, 500V
C-4		Capacitor - Gang - S.W. Ant.
C-5		Capacitor - Gang Trimmer - S.W. Ant.
C-6		Capacitor, .01 mfd, 10%, 200V
C-7		Capacitor, 220 mmf, 20%, 350V
C-8	5546	Capacitor, 120 mmf, 10%
C-9		Capacitor, 3-35 mmf, 500V
C-10		Capacitor .01 mfd, 10%, 200V
C-11		Capacitor, 220 mmf, 20%, 350V
C-12		Capacitor - Gang Condenser S.W.R.F.
C-13		Capacitor - Gang Condenser - Trimmer
C-14		Capacitor 680 mmf, 10%, 1000V
C-15		Capacitor 47000 mmf, 5%, 500V
C-16		Capacitor - Gang Condenser, S.W. Oscillator
C-17		Capacitor - Gang Padder W. Oscillator
C-18		Capacitor, 4-70 mmf.
C-19		Capacitor, 15 mmf, 10% 500V
C-20	73867	Capristor, 56 mmf,
C-21		Capacitor in 1st I.F. Transformer
C-22		Capacitor in 1st I.F. Transformer
C-23		Capacitor in 2nd I.F. Transformer
C-24		Capacitor in 2nd I.F. Transformer
C-25	S-4614	Capristor - 105 mmf
C-26	S-4614	Capristor - 105 mmf
C-27		Capacitor - .047 mfd, 20%, 400V
C-28		Capacitor - .1 mfd, 10%, 400V
C-29		Capacitor -.0022 mfd, 20%, 600V
C-30		Capacitor - .01 mfd,
C-31		Capacitor -.0032 mfd,
C-32		Capacitor - 220 mmf, 20%, 350V
C-33		Capacitor -.0047 mfd, 10%, 400V
C-34	S-4545	Capacitor - electrolytic, 10 mfd, 400V.
C-35		Capacitor, .0047 mfd, 10%, 400V
C-36		Capacitor, 680 mmf, 10%, 300V
C-37		Capacitor, .01 mfd,
C-38		Capacitor, .047 mfd, 20%, 400V
C-39	S-4545	Capacitor - electrolytic, 20 mfd, 400V
C-40		Capacitor, .002 mfd, 10%, 1000V
C-41		Capacitor, .002 mfd, 10%, 1000V
C-42	S-4545	Capacitor - electrolytic, 20 mfd, 400V.
C-43	S-4545	Capacitor - electrolytic, 10 mfd, 400V.
	S-6263	Gang Condenser and Drum
L-1	* S-6692	Coil - B.C. Antenna
L-2	S-6264	Coil - S.W. Antenna
L-3	S-6265	Coil - S.W. R.F.
L-4	S-6268	Coil - B.C. R.F.
L-5	S-6267	Coil - B.C. Oscillator Coil
L-6	S-6266	Coil - S.W. Oscillator Coil
R-1		Resistor - 8200 ohms, 10%, 1/2 watt
R-2		Resistor - 150000 ohms, 20%, 1/2 watt
R-3		Resistor - 1.0 megohm, 10%, 1/2 watt
R-4		Resistor - 68 ohms, 10%, 1/2 watt
R-5		Resistor - 1.0 megohm, 10%, 1/2 watt
R-6		Resistor - 1.0 megohm, 10%, 1/2 watt
R-7		Resistor - 2200 ohms, 20%, 1/2 watt
R-8		Resistor - 22000 ohms, 20%, 1/2 watt
R-9	73867	Capristor - 33 ohms, 1/4 watt
R-10		Resistor - 1.0 megohm, 10%, 1/2 watt
R-11		Resistor - 100 ohms, 1/2 watt
R-12		Resistor - 22000 ohms, 10%, 2 watt
R-13	S-4614	Capacitor - 47000 ohms, 1/4 watt
R-14	S-4640	Resistor - 3.3 megohm, 20%, 1/2 watt
R-15		Resistor - 10 megohm, 20%, 1/2 watt
R-16		Resistor - 470000 ohms, 10%, 1/2 watt
R-17		Resistor - 220000 ohms, 10%, 1/2 watt
R-18		Resistor - 47000 ohms, 10%, 1/2 watt
R-19	* S-6688	Resistor - 2.0 megohm, Volume Control
R-20	* S-6689	Resistor - 1.0 megohm Tone Control
R-21	S-5491	Resistor - 220K, 10%, 1/2 watt
R-22		Resistor - 39000 ohms, 10%, 1/2 watt
R-23	S-6517	Resistor - 82000 ohms, 10%, 1/2 watt
R-24		Resistor - 2200 ohms, 10%, 1/2 watt
R-25		Resistor -470000 ohms, 20%, 1/2 watt
R-26		Resistor - 68000 ohms, 20%, 1/2 watt
R-27		Resistor -470000 ohms, 20%, 1/2 watt
R-28		Resistor - 6800 ohms, 20%, 1/2 watt
R-2		Resistor - 390 ohms, 10%, 2 watt
R-30	S-6517	Resistor - 8200 ohms, 10%, 1/2 watt
R-31	S-6517	Resistor - 8200 ohms, 10%, 1/2 watt
R-32	S-3521	Resistor - 33000 ohms, - 5W.W.
R-33		Resistor - 1.0 megohm, 10%, 1/2 watt
R-34	S-5006	Resistor - 1200 megohm, 10%, 1/2 watt
R-35	S-6318	Resistor - 3300 ohms, 10%, 1/2 watt
S-1, S-2	* S-6693	Switch - Range Switch
T-1	* S-6698	Transformer - Power Trans. - 100 cycle
T-1	* S-6699	Transformer - Power Trans. - 25 cycle
T-2	* S-6696	Transformer - Output Transformer
T-3	S-4487	Transformer - 1st I.F. Transformer
T-4	S-5086	Transformer - 2nd I.F. Transformer
		SPEAKER ASSEMBLY
	* S-6682	Speaker
	* S-6710	Cone and Voice Coil Assembly
		MISCELLANIOUS ASSEMBLIES
	* S-6686	Cable Assembly (Magic Eye)
	* S-6690	Cover - Cabinet Back (Wal-Mah)
	* S-6691	Cover - Cabinet Back (Oak)
	* S-6718	Decal - Complete Set
	* S-6694	Dial - Dial Glass
	* S-6719	Dial - Dial Plate Assembly Includes Dial
	* S-6720	Grille Cloth - (Wal-Mah)
	* S-6721	Grille Cloth - (Oak)
	S-6021	Knob - Knob Assembly (Range)
	S-6019	Knob - Knob Assembly (Volume Tone Tuning)
	* S-6687	Pointer - Station selector
	* S-6722	Socket & Lead Assembly (Phono Motor)
	* S-6683	Socket & Lead Assembly (Pilot Lamp)
	* S-6684	Socket & Lead Assembly (Dial Lamp)
	* S-6685	Socket & Lead Assembly (Dial Lamp)
	S-4202	Socket - Phono Socket
		RECORD CHANGER
		Refer to 124196 Series Service Note for Replacement Parts and Service Data.

* Indicates new stock items.

Only items listed under stock numbers are available as Replacement Parts.

All parts subject to change or withdrawal without notice.

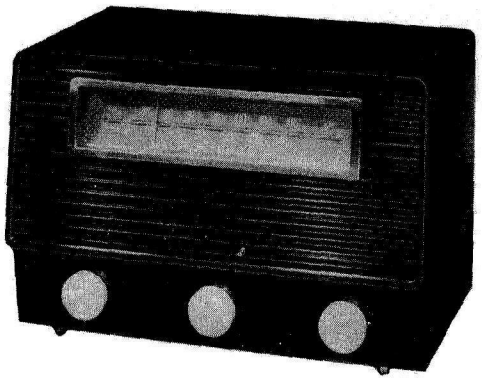

Model 702X

RCA VICTOR

"HIS MASTER'S VOICE"

AM-FM, AC-DC RADIO RECEIVER

MODEL 702X
SERVICE DATA

— 1949 NO. 8 —

GENERAL SERVICE DIVISION
RCA VICTOR COMPANY LIMITED
MONTREAL, QUE.

Electrical and Mechanical Specifications

TUNING RANGES
- Standard Broadcast (AM) ---------- 540-1,600 kc.
- Frequency Modulation (FM) ---------- 88-108 mc.

INTERMEDIATE FREQUENCIES--AM—455 kc., FM—10.7 mc.

TUBE COMPLEMENT
- (1) RCA 19J6 ---------- Mixer and Oscillator
- (2) RCA 6BJ6 ---------- I. F. Amplifier
- (3) RCA 12AU6 ---------- Driver
- (4) RCA 12AL5 ---------- Ratio Detector
- (5) RCA 6AQ6 ---------- AM Det.—A. F. Amp.
- (6) RCA 35C5 ---------- Output
- (7) RCA 35W4 ---------- Rectifier

DIAL LAMP ---------- Type No. 47, 6-8 volts, 0.15 amp.

POWER SUPPLY:

This instrument will operate on 115 volts d.c. or 25 to 60 cycles a.c.

If the receiver does not operate on d.c., reverse the power cord. On a.c., reversal of the cord may reduce hum or improve FM reception.

ANTENNAS:

These receivers have built-in antennas for standard broadcast (AM) and frequency modulation (FM) reception.

Under average conditions these antennas will provide satisfactory reception—however provision is made for the use of an external antenna for FM reception if desired.

To use external FM antenna:

1. Remove the wire from under the No. 2 terminal screw of the antenna terminal board. The bare end of this wire should be taped to prevent contact with the antenna terminal screws.
2. Connect the transmission line from an external FM dipole antenna to the No. 1 and No. 2 terminals of the antenna terminal board.

To use built-in FM antenna:

1. The wire extending thru the back of the cabinet must be connected to No. 2 terminal of the antenna terminal board.
2. The power cord should be fully extended and must not be coiled or hanked up.
3. Reversal of the line cord plug may improve reception. DO NOT USE EXTERNAL GROUND.

LOUDSPEAKER
- Type ---------- 5 inch P.M.
- Voice coil impedance ---------- 3.2 ohms at 400 cycles

TUNING DRIVE RATIO ---------- 11½:1 (5¾ turns of knob)

POWER SUPPLY RATING

115 volts d.c. or 25 to 60 cycles a.c. ---------- 30 watts

POWER OUTPUT
- Maximum ---------- 1.65 watts
- Undistorted ---------- 1.0 watt

CABINET DIMENSIONS

Height---8⅝ in. Width---12⅞ in. Depth---7-5/16 in.

CAUTION:

THE CHASSIS IS CONNECTED TO ONE SIDE OF THE POWER SUPPLY. Use caution to prevent contact with pipes, radiators, etc. when servicing with chassis removed from cabinet.

CONTROL KNOBS

DO NOT ATTEMPT TO REMOVE THE CONTROL KNOBS FROM THE CABINET. The knobs have spring retainers on the inside of the cabinet to prevent their removal. The retainers are accessible only after the chassis has been removed from the cabinet.

REMOVAL OF CHASSIS:

1. Remove the four screws at the corners of the back cover—pull back cover off carefully—the power cord plug and socket at the bottom right-hand corner will pull apart but the antenna leads remain connected.
2. Unhook the dial cord from the pointer.
3. Remove the four screws which hold the chassis to the cabinet (two at sides of chassis base and two on dial cord pulley brackets above the chassis base).
4. Pull the chassis to the rear—the knobs will be retained with the cabinet.

If removal of the chassis is not necessary when servicing, the back cover may be placed on the supports molded into the upper part of the cabinet.

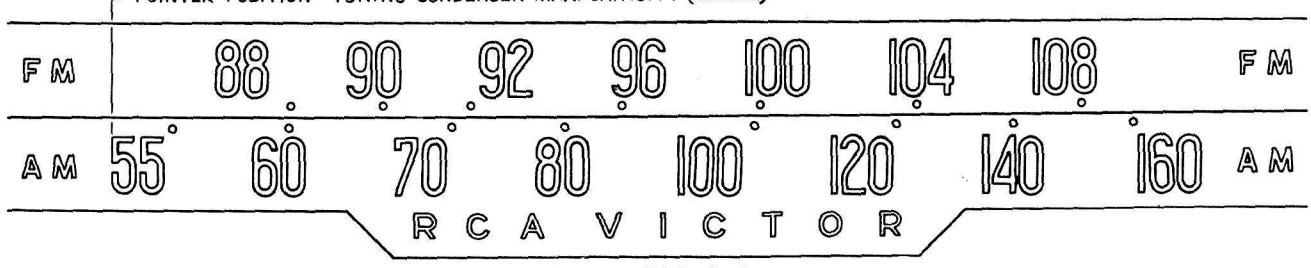

Fig. 1 Dial Scale

The dial scale drawing shown is a full size reproduction. It can be used as a reference in alignment procedure

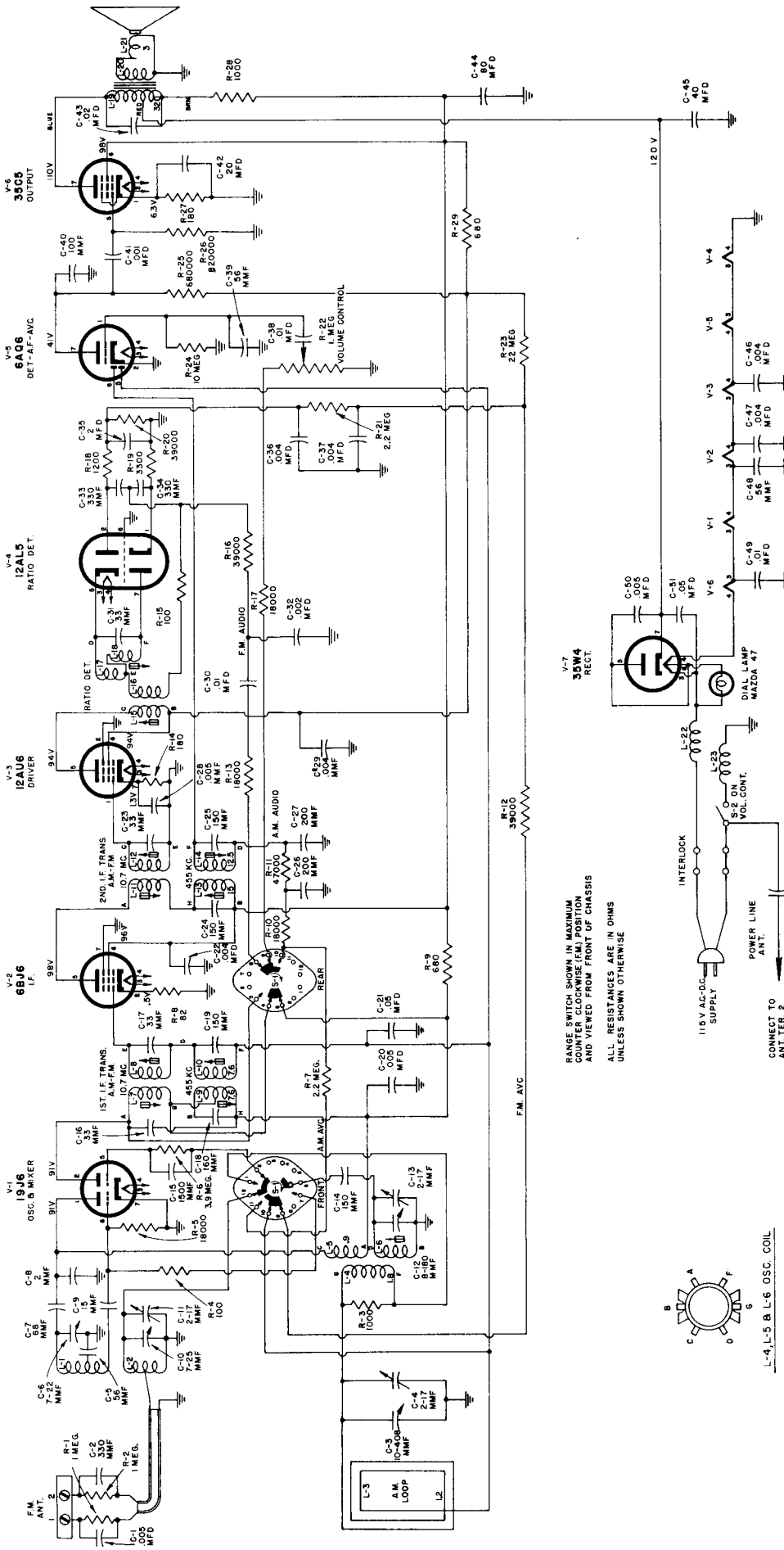

Fig. 2—Schematic Diagram

ALIGNMENT PROCEDURE AND CHART

Correct Alignment of the FM Band requires that the AM. Band be aligned first.

CAUTION:

The chassis is connected to one side of the power supply. On a.c. operation it is recommended that an isolation transformer (115 v./115 v.) be used for the receiver when servicing.

OSCILLOSCOPE ALIGNMENT:

The FM I. F. alignment may be checked using a sweep generator and an oscilloscope. Shunt terminals B and C of the Ratio Det. trans. with a 1,200 ohm resistor. Connect the high side of the oscilloscope to terminal C of R.D.T. in series with a diode probe. Apply the output of the sweep generator (10.7 mc with ±250 kc. sweep) to pin No. 1 of V2 (6BJ6) in series with .01 mf. Low side of the oscilloscope and sweep generator to chassis. This will show the response of the 2nd I.F. Trans.

To check the combined response of the first and second I.F.'s connect the sweep generator to the antenna terminal board—high side to No. 2 terminal in series with 300 ohms and low side to No. 1 terminal. Oscilloscope connections are previously connected.

To check the ratio detector response; connect the high side of the oscilloscope direct to terminal No. 8 of S1 rear, low side to chassis, apply the output of the sweep generator to pin No. 1 of V3 (12AU6) in series with .01 mf. Driver plate circuit connected for normal operation (1200 ohm resistor removed). NOTE: It is difficult to observe marker signals in this step—center frequency and sweep width should be previously observed.

ALIGNMENT INDICATOR:

The dial and dial back plate are not attached to the chassis. During alignment a substitute frequency indication must be used. We suggest attaching a paper clip to the dial drive cord so that its movement may be measured—refer to the "Dial Scale" illustration on page 1.

CRITICAL LEAD DRESS

1. All connections in the mixer-oscillator circuit are extremely critical both in regard to lead length and lead dress. Do not disturb unless necessary—make careful notation before servicing if it becomes necessary to disturb this wiring.
2. The ground lead from pin No. 2 of V3 (12AU6 Driver) is critical in length and must be dressed down against chassis.
3. Dress audio coupling capacitor C38 away from output transformer.
4. Dress diode filter unit away from alignment hole in 2nd I.F.
5. Dress grid lead of V3 (pin No. 1 of 12AU6) against chassis apron.
6. Dress plate lead of V1 (pin No. 2 of 19J6) against chassis.
7. Dress loop antenna leads so as to prevent contact with external antenna terminal board.
8. All ground connections to chassis should be restored to the original places of connection if disturbed.
9. Dress capacitor C14 down close to range switch so as to clear the projection on the bottom of the cabinet.
10. The FM ant. and osc. coils must be cemented to the coil support to prevent microphonic howl on FM. Coil dope is recommended for this purpose.

ORDER OF ALIGNMENT			TEST OSCILLATOR				RECEIVER				
			CONNECT "HI" SIDE TO	CONNECT "LO" SIDE TO	DUMMY ANTENNA	FREQUENCY SETTING	RANGE SELECTOR	DIAL SETTING	CIRCUIT TO ADJUST	ADJUSTMENT SYMBOL	NOTES
A.M.	I.F. ALIGNMENT	1	C-3 Gang Cond.	Gnd.	.01 Mfd	455 Kc	AM	Low end	2nd. I.F. AM. Trans.	L-13 L-14 †	Max. Out.
		2	Same	Same	Same	Same	Same	Same	1st. I.F. AM. Trans.	L- 9 L-10 †	Max. Out.
	R.F. ALIGNMENT	3	Short Wire (Radiate)	Same	Same	1620 Kc	Same	Extreme High end	Osc.	C-13	Max. Out.
		4	Same	Same	Same	1400 Kc	Same	1400 Kc	Ant.	C- 4	Max. Out.
		5	Same	Same	Same	600 Kc	Same	600 Kc	Osc.	L-6 Rock Gang	Max. Out.
		6	Repeat Steps 3, 4 and 5.								
F.M.	I.F. ALIGNMENT	7	Connect the positive probe of the meter to the negative lead of the 2 Mfd. capacitor (C-35) and the common lead to chassis. Adjust signal generator output ot provide approx. - 3V indication during alignment.								
		8	Pin No 1 12AU6	Same	.01 Mfd	10.7 Mc 400 cycles 30% AM. Mod.	FM	Extreme Low end	Ratio Det.	L-15 L-18 *	Max. Out. Min. Audio Out.
		9	Remove (blue) ant. lead from No. 2 term. Connect "Hi" side in series with a 300 ohm resistor and the "Lo" side to ter. No. 1.								
		10	See Step 9	See Step 9	See Step 9	10.7 Mc 400 cycles 30% AM. Mod.	FM	Extreme Low end	2nd. I.F. FM. Trans.	L-11 †† L-12	Max. Out.
		11	Same	Same	Same	Same	Same	Same	1st. 8.F. FM. Trans.	L-7 †† L-8	Max. Out.
	R.F. ALIGNMENT	12	Same	Same	Same	106 Mc	Same	106 Mc	Osc. Ant.	L- 1 ** L-11	Max. Out.
		13	Same	Same	Same	90 Mc	Same	90 Mc	Ant.	L-5 (Rock Gang)	Max. Out.
		14	Repeat Steps 12 and 13 until further adjustment does not improve calibration.								

*Two or more points may be found which lower the audio output. At the correct point the minimum audio output is approached rapidly and is much lower than at any incorrect point.

Due to the fact that several incorrect peaks may be obtained when aligning the ratio detector, it is advisable to first determine the correct peak by feeding in a 10.7 MC (F.M.) signal with a sweep of about 20 KC., then align the bottom core for maximum output. Switch the generator to A.M. and retouch the core for minimum audio output. Always check the response of the ratio detector on the scope to obtain best results.

**L1 and L2 are adjustable by increasing or decreasing the spacing between turns.

†Use alternate loading.

Alternate loading involves the use of a 10,000 ohm resistor to load the AM plate winding while the AM grid winding of the SAME TRANSFORMER is being peaked. Then the grid winding is loaded with the resistor while the plate winding is peaked. Only one winding is loaded at any one time. Remove the 10,000 ohm resistor after 2nd and 1st I.F.'s have been aligned.

Oscillator frequency is above signal frequency on both AM and FM.

††Align 2nd and 1st I.F. trans. by means of alternate loading as explained under AM alignment. Use a 680 ohm resistor instead of a 10,000 ohm resistor and load the FM windings.

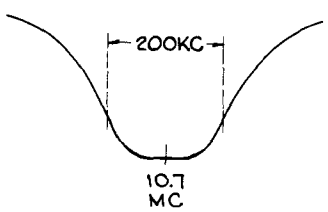

2nd I.F. Response

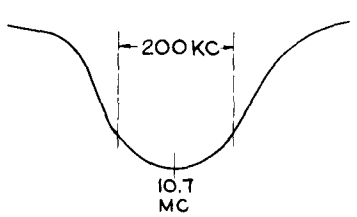

1st and 2nd I.F. Response

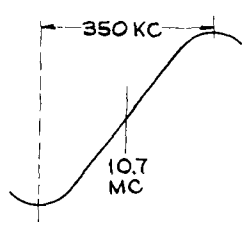

Ratio Det. Response

Fig. 3—F.M. Response Curves

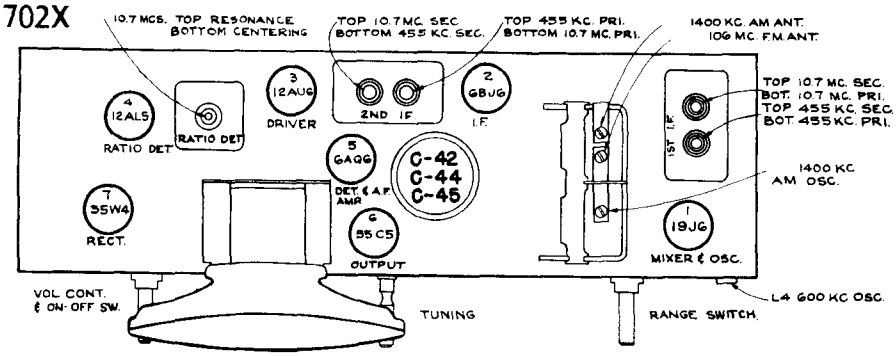

Fig. 4—Chassis Layout and Alignment Adjustment

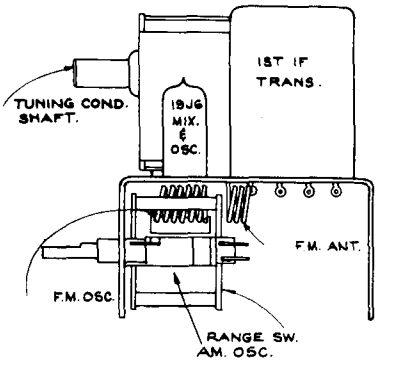

Fig. 5—Ant. and Osc. Coil Locations

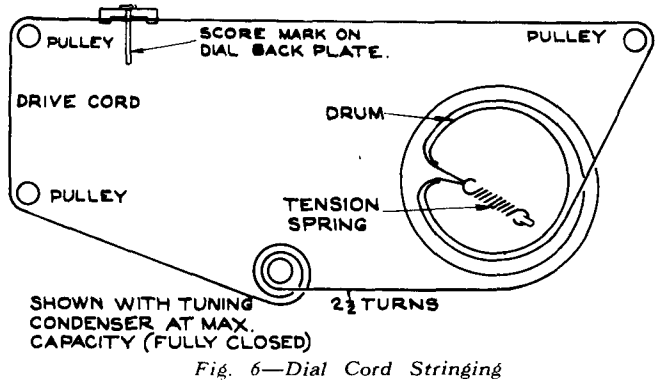

Fig. 6—Dial Cord Stringing

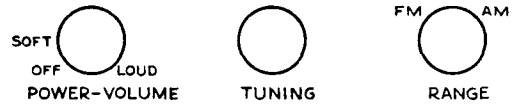

Fig. 7—Controls

REPLACEMENT PARTS FOR MODEL 702X

Insist on genuine factory tested parts, which are readily identified and may be purchased from authorized dealers.

Stock No.	Description	List Price
	CHASSIS ASSEMBLY	
73866	Capacitor - 2 MMF. ceramic 12½% 500 V.(C8)	
31353	" - 15 " " 10 % 500 V.(C9)	
73867	" - 56 " " 2½% 500 V.(C5)	
73499	" - 56 " " 20 % 500 V. (C39-C48)	
33379	Capacitor - 68 " " 10 % 500 V.(C7)	
39628	" -100 " Mica 10 % 500 V. (C40)	
48125	Capacitor -150 " ceramic 10 % 500 V.(C40)	
12952	" -330 " Mica 10 % 500 V. (C2-C33-C34-C52)	
71501	Capacitor 1500 " ceramic 20% 350 V. (C15)	
74009	" .004 Mfd. ceramic (dual) 500 V. (C22-C29-C36-C37-C46-C47)	
73473	Capacitor .005 Mfd. ceramic (C1-C50-C20)	
73186	" .001 Mfd. Midget paper 10% 400 V. (C41)	
73750	Capacitor .002 Mfd. " " 10% 200V. (C32)	
71926	Capacitor .005 " " " 10% 100V. (C28)	
71923	Capacitor .01 " " " 10% 100V. (C30-C38-C49)	
74010	Capacitor .02 " " " 10% 400V. (C43)	
	Capacitor .05 " Paper 20% 400V. (C51-C21)	
73747	Capacitor Electrolytic Midget 2 Mfd. 50V. (C35)	
73975	Capacitor Electrolytic 80 Mfd. 150V.-40 Mfd.-150V. 20 Mfd.25V.(C42-C44-C45)	
73973	Condenser - Variable (C6-C10-C11-C3-C4-C12-C13)	
S-5050	Coil - Oscillator coil FM (L1)	
S-5049	" - " " AM (L4-L5-L6)	
S-5051	" - Ant. coil FM (L2)	
S-5052	" - Line choke coil (#18 solid wire 1/32" plastic insulation 10 turns close wind (L6-L7)	
74011	Filter - diode filter (200 MMF - 200 MMF - 47000 ohms) (C26-C27-R11)	
73991	Indicator - station selector pointer	
	Resistor 82 ohms ½ watt 10% (R8)	
	" 100 " " " 20% (R4)	
	" 100 " " " 5% (R15)	
	" 180 " " " 10% (R14-R27)	
	" 680 " " " 20% (R9-R29)	
	" 1000 " " " 10% (R3)	
	" 1000 " " " 20% (R28)	

Stock No.	Description	List Price
	CHASSIS ASSEMBLY - Cont'd	
	" 1200 " " " 5% (R18)	
	" 3300 " " " 5% (R19)	
	" 18000 " " " 10% (R5-R10-R13-R17)	
	" 39000 " " " 10% (R12-R16)	
	" 39000 " " " 5% (R20)	
	" 680,000 " " " 10% (R25)	
	" 820,000 " " " 10% (R26)	
	" 1 Megohm " " 20% (R1-R2)	
	" - 2.2 Megohm ½ watt 20% (R7-R21)	
	" - 3.9 " " " 10% (R6)	
	" - 10 " " " 20% (R24)	
	" - 22 " " " 20% (C23)	
73978	Shaft - drive shaft	
73117	Socket - tube socket	
73977	Switch - range switch (S1)	
S-5043	Transformer 1st I.F. (dual)(L7-L8-C16-C17)(L9-L10-C18-C19)	
S-5044	" 2nd I.F. (dual)(L11-L12-C23-L13-L14-C24-C25)	
S-5045	" ratio detector (L15-L16-L17-C31)	
38406	Volume control - 1 Meg. (R22-S2)	
	SPEAKER ASSEMBLY	
35849	Dust cap (Pkg. 3)	
S-5047	Cone - cone & voice coil assy. (L21)	
S-5048	Output transformer (L19-L20)	
	MISCELLANEOUS ASSEMBLY	
73984	Back - cabinet back (Maroon) complete with loop	
73985	Back - cabinet back (Ivory) complete with loop	
73988	Bezel - dial bezel less dial	
S-5040	Cabinet - plastic (Maroon)	
S-5041	" - " (Ivory)	
S-4313	Cord - dial cord	
73990	Dial - plastic dial scale	
73982	Knob - control knob (brown)	
73983	" - " " (ivory)	
11891	Lamp - dial lamp (Mazda 47)	
73986	Loop - antenna loop (L3)	
72765	Nut - speed nut for bezel & dial scale (Pkg. 2)	
S-5042	Socket - cable & power input socket & cable assy. part of back cover assy.	
14270	Spring - retaining spring for knobs (Pkg. 2)	
S-5054	Transmission line FM.	

Items not shown in the Replacement Parts List are not supplied.
All parts and prices subject to change or withdrawal without notice.

RCA VICTOR

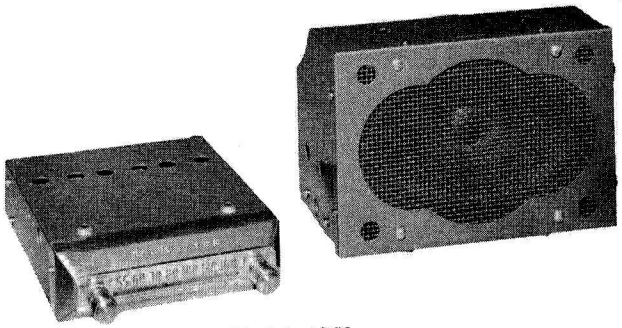

Model A752

AUTO RECEIVER

MODEL A752

SERVICE DATA

—1950 NO. 5—

GENERAL SERVICE DIVISION
RCA VICTOR COMPANY LIMITED
MONTREAL, QUE.

Electrical and Mechanical Specifications

Frequency Range ---------- 540—1600 KC
Intermediate Frequency ---------- 455 KC
Tuning Ratio ---------- 5 to 1

TUBE COMPLEMENT

(1) 6BE6 ---------- Converter
(2) 6BA6 ---------- I.F. Amplifier
(3) 6AV6 ---------- 2nd Det. A.V.C. and 1st A.F.
(4) 6AQ5 ---------- Power Output
(5) 6C4 ---------- Phase Inverter
(6) 6AQ5 ---------- Output
(7) 6X4 ---------- Rectifier

LOUDSPEAKER

Type ---------- 5" x 7" Elliptical P.M.
V.C. Impedance ---------- 3.4 Ohms at 400 cycles

POWER SUPPLY

Source ---------- 6.3 Volts auto battery
Current drain ---------- 6 Amps

POWER OUTPUT

Undistorted ---------- 5.3 Watts
Maximum ---------- 8.5 Watts

CABINET DIMENSIONS

	Height	Width	Depth
Radio Unit	1¾"	6"	7½"
Power Supply Unit	5¼"	7⅝"	4⅜"

OPERATING CONTROLS

Left Knob ---------- Volume Control and Switch
Right Knob ---------- Tone Control and Tuning

REPLACEMENT PARTS FOR MODEL A752

Insist on Genuine Factory Tested Parts, which are readily identified and may be purchased from Authorized Dealers.

Stock No.	Description	List Price
	CHASSIS ASSEMBLY	
S-4799	Capacitor - Trimmer 7-150 mmf.(C1,C6)	
45233	" - Ceramic 100 mmf. 500V (C2)	
	" - Mica 270 mmf. 500V (C5)	
S-4819	" - Ceramic 470 mmf. 350V(C17,C26)	
	" - Mica 2200 mmf.500V (C7)	
S-4523	Capristor - 33 ohms & 56 mmf. (R3,C4)	
S-4614	" - 47K & 105 +105 mmf.(R8,C13,14)	
S-5640	Capacitor - Disc Type .005 mfd. (C19)	
	" - Paper .005 mfd.400V (C18)	
	" - Paper .005 mfd.600V (C21,C23)	
	" - Paper .008 mfd.1600V(C27)	
	" - Paper .047 mfd.100V (C16)	
S-5611	" - Disc Type .01 mfd.(C15,C22)	
	" - Paper .01 mfd. 400V(C3,C12)	
	" - Paper .5 mfd. 100V(C28,29,30)	
S-3131	" - Electrolytic (C24,C25)	
13961	Resistor - 82 ohms 1/2 watt (R22)	
	" - 100 ohms 1/2 watt (R5,R24)	
	" - 270 ohms 1 watt (R20)	
	" - 1000 ohms 1/2 watt(R21)	
	" - 5600 ohms 1/2 watt(R11)	
	" - 15000 ohms 1/2 watt (R23)	
	" - 22000 ohms 1/2 watt (R2)	
	" - 33000 ohms 1 watt (R4)	
	" - 68000 ohms 1/2 watt (R6,R10)	
	" - 220,000 ohms 1/2 watt(R12,R16)	
	" - 470,000 ohms 1/2 watt(R16,R17, R19)	
	" - 1 Meg. ohms 1/2 watt (R1)	
	" - 3.3 Meg. ohms 1/2 watt (R7)	
	" - 10 Meg. ohms 1/2 watt (R15)	
S-5622	Switch - Tone Switch Assembly	
S-5601	Tuner - Permeability Tuner (L1,L2)	
S-5634	Transformer-Vibrator Transformer (T2)	

Stock No.	Description	List Price
	CHASSIS ASSEMBLY (Cont'd)	
S-4487	Transformer-1st IF Transformer (C8,C9,L4,L5)	
S-4662	" -2nd IF Transformer (C10,C11, L6,L7)	
S-5624	Volume Control & Power Switch (R9,SW-2)	
S-4801	Vibrator	
	SPEAKER ASSEMBLY	
S-5630	Speaker	
S-5636	Cone & Voice Coil Assy.	
S-5650	Output Transformer	
	MISCELLANEOUS ASSEMBLIES	
S-5626	Case - Receiver Case	
S-5627	Case - Receiver Case Nose (dial scale)	
S-5628	Case - Speaker Case	
S-5629	Cover- Speaker Case Cover	
S-4313	Cord - Dial Cord	
5025	Capacitor - Generator Capacitor	
S-5649	Grille - Speaker Grille	
6148	Fuse - 10 AMP Fuse (Pkg. 2)	
S-5621	Knob - Volume and Tone Control Tuning Knobs	
S-5638	Mounting Kit	
S-4861	Lead - "A" Lead (with male connection)	
S-3320	Distributor Suppressor	
S-5651	Spring - Dial Cord Tension Spring	
S-5623	Pointer - Station Selector Pointer	

Items not shown in the Replacement Parts List are not supplied.
All parts and prices subject to change or withdrawal without notice.

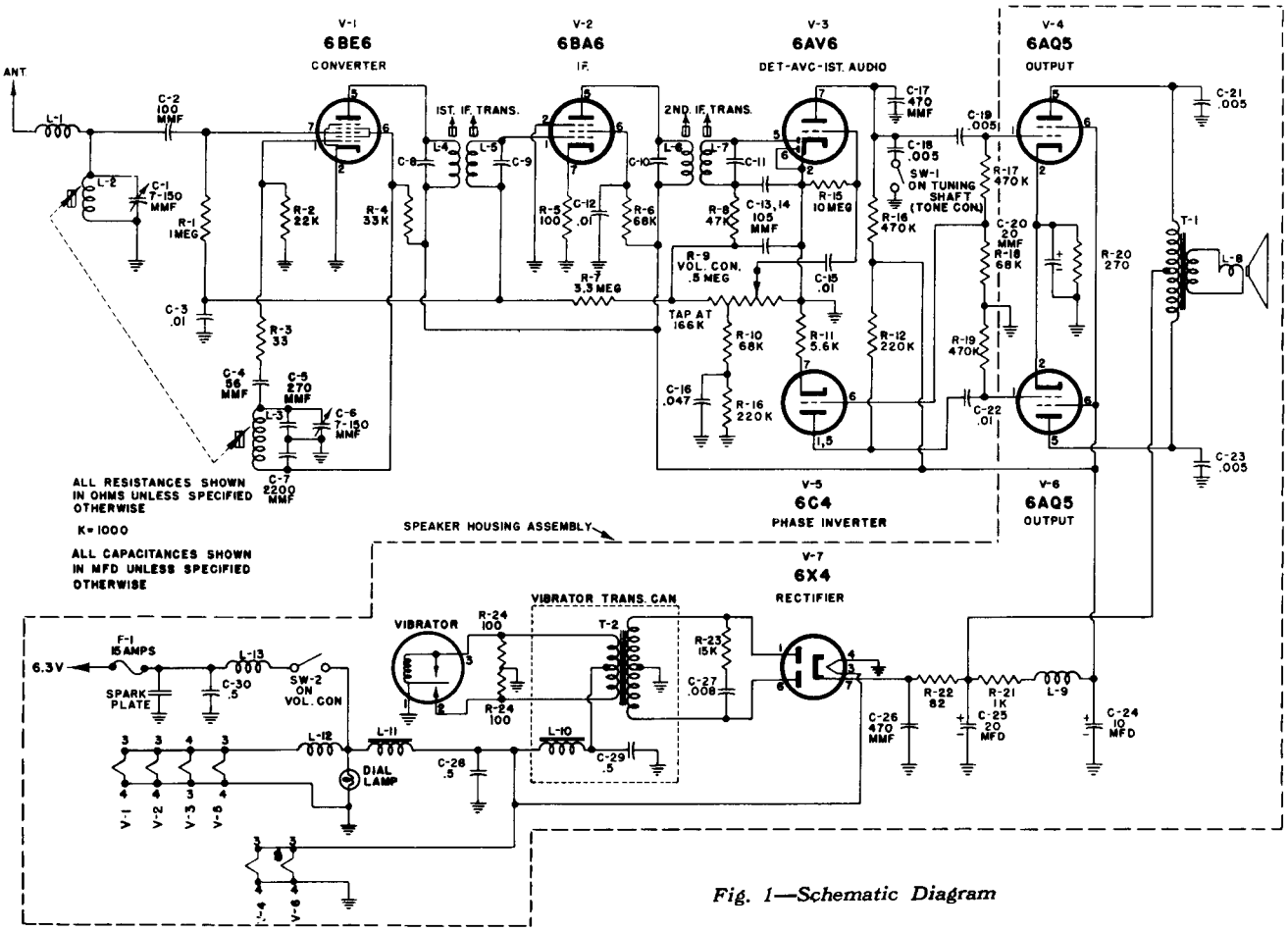

Fig. 1—Schematic Diagram

ALIGNMENT PROCEDURE

Before aligning the receiver, mesh the tuning unit (cores inside coils) and set the dial cursor on the calibration point at the extreme left hand end of the dial.

In order to obtain best results, it is advisable to align the 455 kc I.F.'s with the help of a cathode ray oscilloscope. The scope should be connected across the volume control. If this equipment is not available, use the method outlined below in the alignment chart.

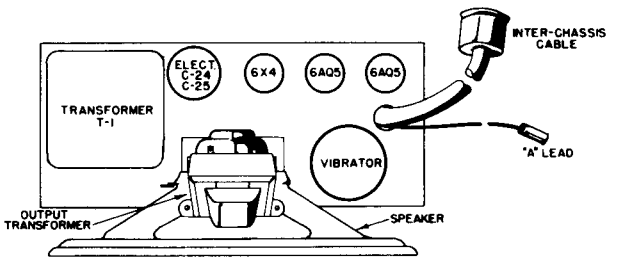

Fig. 2—Power Supply and Output Chassis

Tuner Unit Layout similar to A552 Chassis

ALIGNMENT CHART

ORDER OF ALIGNMENT		TEST OSCILLATOR				RECEIVER				
		CONNECT "HI" SIDE TO	CONNECT "LO" SIDE TO	DUMMY ANTENNA	FREQUENCY SETTING	RANGE SELECTOR	DIAL SETTING	CIRCUIT TO ADJUST	ADJUSTMENT SYMBOLS	NOTES
I.F. ALIGNMENT	1	Pin No. 1 6BA6	Gnd.	.1 Mfd.	455 KC		"Hi" End	2nd I.F. Trans.	Top and Bottom Slugs in 2nd I.F. Trans.	Max. Out
	2	Pin No. 7 6BE6	Gnd.	.1 Mfd.	455 KC		Same	1st I.F. Trans.	Top and Bottom Slugs in 1st I.F. Trans.	Max. Out
R.F. ALIGNMENT	3	Ant.	Gnd.	22 MMF. in Series & 56 across	1600 KC		1600 KC	Osc.	C-6	Same
	4	Ant.	Gnd.	Same	1600 KC		1600 KC	Ant.	C-1	Same
	5	* Ant.	Gnd.	Same	1350 KC		1350 KC	Osc.	Osc. Coil Slug	Same
	6	Ant.	Gnd.	Same	1350 KC		1350 KC	Ant.	Ant. Coil Slug	Same

* (1) NOTE: The oscillator coil slug has been pre-set in the factory and no further adjustment of this coil will be nesecsary unless the slug has been tampered with.

(2) NOTE: Final adjustments of C-1, must be made after the receiver has been installed and the antenna connected. (See "Antenna Circuit").

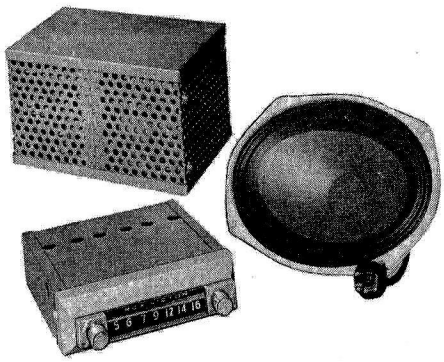

Model A754

RCA VICTOR

"HIS MASTER'S VOICE"

AUTO RECEIVER

MODEL A754

SERVICE DATA

—1951 NO. 2—

GENERAL SERVICE DIVISION
RCA VICTOR COMPANY LIMITED
MONTREAL, QUE.

Electrical and Mechanical Specifications

Frequency Range ----------540—1600 KC
Intermediate Frequency ----------455 KC
Tuning Ratio ----------5 to 1

TUBE COMPLEMENT

(1) 6BE6 ---------- Converter
(2) 6BA6 ---------- I.F. Amplifier
(3) 6AV6----------2nd Det. A.V.C. and 1st A.F.
(4) 6C4 ---------- Phase Inverter
(5) 6V6GT/G ---------- Output
(6) 6V6GT/G ---------- Output
(7) 6X4 ---------- Rectifier

LOUDSPEAKER

Type ----------6" x 9" Elliptical P.M.
V.C. Impedance ----------3.4 Ohms at 400 cycles

POWER SUPPLY

Source ----------6.3 Volts auto battery
Current drain ----------7 Amps.

POWER OUTPUT (at 6.3V input to Power Supply)

Undistorted ---------- 6.0 Watts
Maximum ---------- 8.0 Watts

CABINET DIMENSIONS

	Height	Width	Depth
Radio Unit ----------	1¾"	6"	7½"
Power Supply Unit ----------	5⅜"	6"	4"

OPERATING CONTROLS

Left Knob ----------Volume Control and Switch
Right Knob ----------Tone Control and Tuning

REPLACEMENT PARTS FOR MODEL A754

Insist on Genuine Factory Tested Parts, which are readily identified and may be purchased from Authorized Dealers.

Stock No.	Description
	CHASSIS ASSEMBLY
S-4799	Capacitor - trimmer (7-150 mmf.)(C-1,C-6)
S-4523	Capristor - 56 mmf., 33 ohms (C4,R3)
S-4614	" - 2 - 105 mmf, 47 K ohms (C-13,C-14)
45233	Capacitor, 100 mmf. - 10% (C-2)
*S-6133	" 220 mmf. - 10% 500V. (C-5)
S-4819	" 470 mmf. - 20% 350 V. (C-17,C-26)
*S-6134	" 1500 mmf. - 10% (C-19)
	" .005 mfd. - 10% 400 V. (C18)
	" .005 mfd. - 10% 1000 V.(C-21,C-23)
	" .005 mfd. - 10% 1600 V. (C27)
73960	" .01 mfd. 500 V. (C-3,C-22,C-15)
	" .025 mfd. - 10% 200 V.(C-16)
	" .05 mfd. - 20% 400 V.(C12)
	" .5 mfd. - 20% 100 V.(C-28,C-29 C-30)
37701	" Electrolytic (C20,C24,C25)
S-2987	Choke - Ant. choke (L-1)
13961	Resistor - 82 ohms - 10% 1/2 W.(R-22)
34765	" - 100 ohms - 10% 1/2 W.(R-5)
	" - 120 ohms - 10% 1/2 W.(R-24,R-24A)
	" - 390 ohms - 10% 1 W.(R-20)
	" - 2200 ohms - 10% 1 W.(R-21)
	" - 5600 ohms - 10% 1/2 W.(R-11)
	" - 15,000 ohms - 10% 1/2 W.(R23)
	" - 18,000 ohms - 10% 1/2 W.(R-10)
	" - 22,000 ohms - 20% 1/2 W.(R2)
	" - 56,000 ohms - 10% 1 W.(R4-R6)
	" - 68,000 ohms - 10% 1/2 W.(R18)
	" - 220,000 ohms - 10% 1/2 W.(R-12)
	" - 470,000 ohms - 10% 1/2 W.(R-16)
	" - 470,000 ohms - 20% 1/2 W.(R-17, R-19)
	" - 1.0 Meg. ohms - 20% 1/2 W.(R1)
	" - 3.3 Meg. ohms - 20% 1/2 W.(R7)
	" - 10.0 Meg. ohms - 20% 1/2 W.(R15)
*S-6110	Tuner - Permeability tuner (L2,L-3)

Stock No.	Description
	CHASSIS ASSEMBLY (Cont'd.)
*S-6113	Transformer - Vibrator (T-2)
S-4487	" - 1st I.F. (C-8,C-9,L-4,L-5)
S-5570	" - 2nd I.F. (C-10,C-11,L-6,L-7)
S-5624	Volume Control & Power switch (R-9,SW-2)
S-4801	Vibrator
	SPEAKER ASSEMBLIES
*S-6107	Speaker
*S-6109	" cone assembly
*S-6115	Transformer - Output trans.
	MISCELLANEOUS ASSEMBLIES
S-5626	Case - Receiver case
*S-6108	Case - " " nose
*S-6118	Case - Power supply case
*S-6119	Case - " " " cover
S-4313	Cord - Dial cord
S-5025	Capacitor - Generator cap.
*S-6116	Dial Scale
*S-6117	Eyelet - dial scale eyelet
6148	Fuse - 10 amp fuse
S-5621	Knob - volume, tuning tone
S-4861	Lead Assy. - (Fuse holder)
*S-6112	" - (Rec. 'A' lead)
*S-6130	Mounting Hardware Kit
31302	Plug - speaker plug
S-5553	Plug - power supply plug
*S-6131	Pointer - Station Selector pointer
5040	Socket - speaker socket
*S-6132	Socket & Cable assy (power supply)
S-5651	Spring - dial cord tension spring
	*Indicates New Stock Items.

Items not shown in the Replacement Parts List are not supplied.
All parts subject to change or withdrawal without notice.

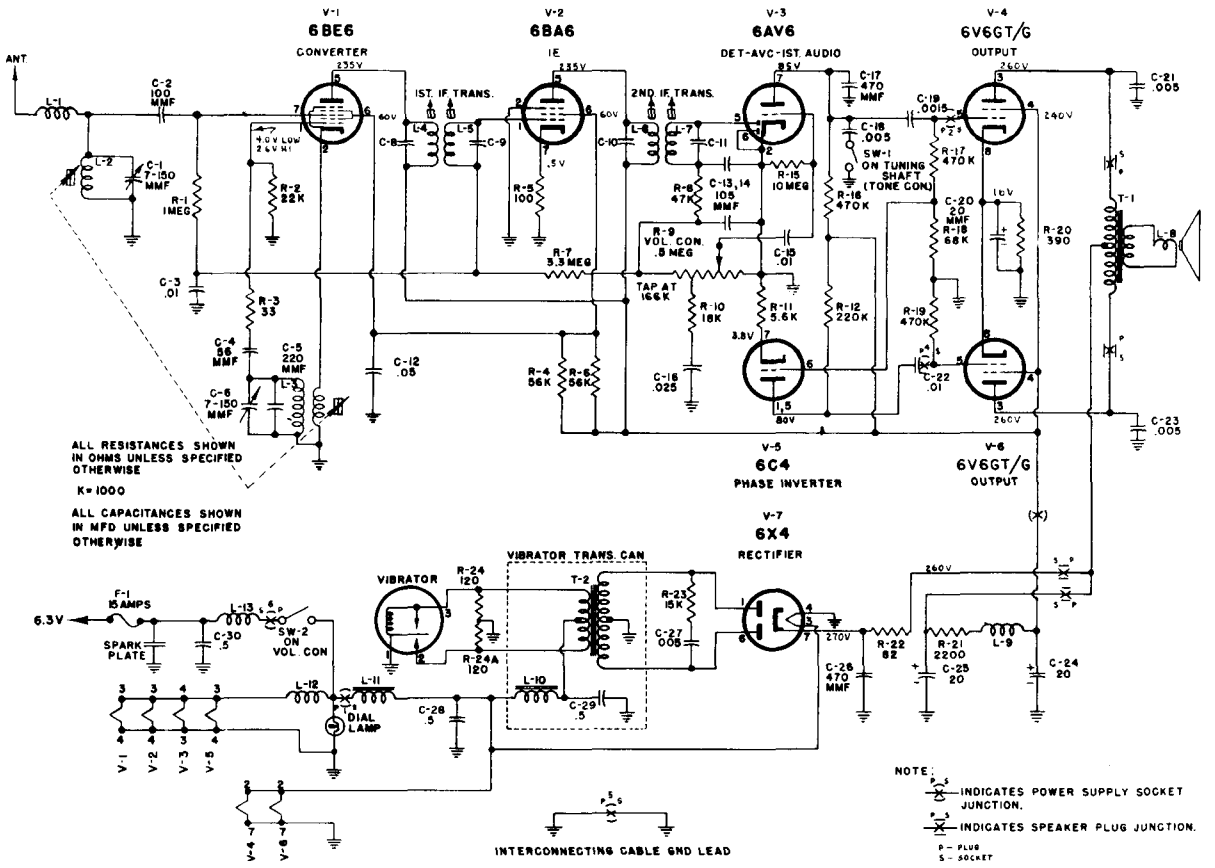

Fig. 1—Schematic

ALIGNMENT PROCEDURE

Before aligning the receiver, mesh the tuning unit (cores inside coils) and set the dial cursor on the calibration point at the extreme left hand end of the dial.

In order to obtain best results, it is advisable to align the 455 kc I.F.'s with the help of a cathode ray oscilloscope. The scope should be connected across the volume control. If this equipment is not available, use the method outlined below in the alignment chart.

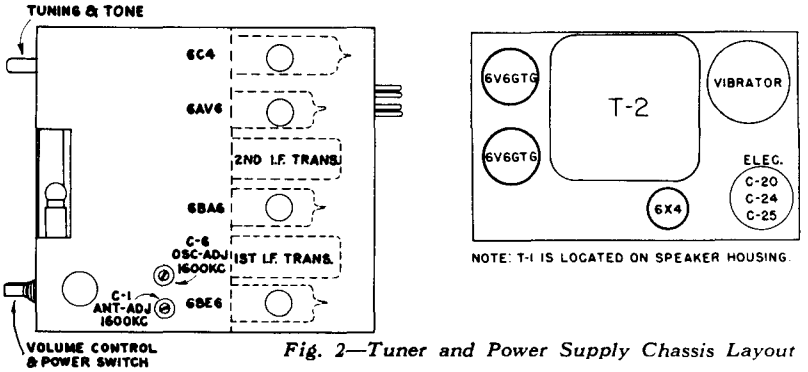

Fig. 2—Tuner and Power Supply Chassis Layout

ALIGNMENT CHART

ORDER OF ALIGNMENT		TEST OSCILLATOR				RECEIVER				
		CONNECT "HI" SIDE TO	CONNECT "LO" SIDE TO	DUMMY ANTENNA	FREQUENCY SETTING	RANGE SELECTOR	DIAL SETTING	CIRCUIT TO ADJUST	ADJUSTMENT SYMBOLS	NOTES
I.F. ALIGNMENT	1	Pin No. 1 6BA6	Gnd.	.1 Mfd.	455 KC		"Hi" End	2nd I.F. Trans.	Top and Bottom Slugs in 2nd I.F. Trans.	Max. Out
	2	Pin No. 7 6BE6	Gnd.	.1 Mfd.	455 KC		Same	1st I.F. Trans.	Top and Bottom Slugs in 1st I.F. Trans.	Max. Out
R.F. ALIGNMENT	3	Ant.	Gnd.	22 MMF. in Series & 56 across	1600 KC		1600 KC	Osc.	C-6	Same
	4	Ant.	Gnd.	Same	1600 KC		1600 KC	Ant.	C-1	Same
	5	* Ant.	Gnd.	Same	1350 KC		1350 KC	Osc.	Osc. Coil Slug	Same
	6	Ant.	Gnd.	Same	1350 KC		1350 KC	Ant.	Ant. Coil Slug	Same

* (1) NOTE: The oscillator coil slug has been pre-set in the factory and no further adjustment of this coil will be nesecsary unless the slug has been tampered with.

(2) NOTE: Final adjustments of C-1, must be made after the receiver has been installed and the antenna connected.

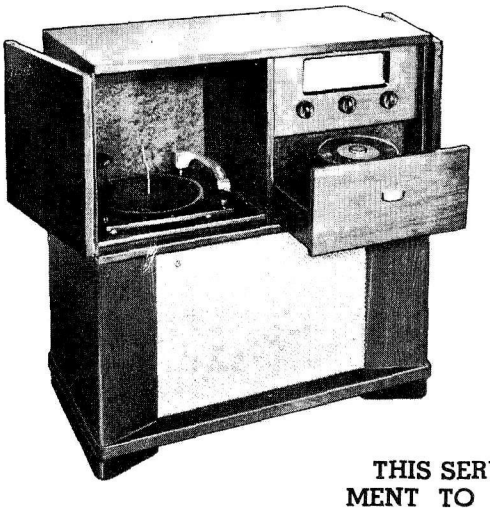

RCA VICTOR

RADIO-PHONOGRAPH COMBINATION

MODEL V-800

SERVICE DATA

—1952 NO. 8—

HEAD OFFICE SERVICE DEPARTMENT
RCA VICTOR COMPANY LIMITED
MONTREAL, QUE.

THIS SERVICE DATA IS ISSUED AS A SUPPLEMENT TO THE ORIGINAL (First Edition—First Printing) SERVICE DATA FOR MODEL 4QV8C.

Due to a scarcity of type 6SF7 tubes it became necessary to make a change in the radio chassis. In chassis stamped RC 620A a type 6SF7 tube is used as I.F. amplifier and detector. In later chassis (stamped RC 620D) a 6SK7 tube is used as I.F. amplifier and a crystal diode rectifier (CR101) is wired into the circuit to perform the detector function. The revised part of the circuit is shown below.

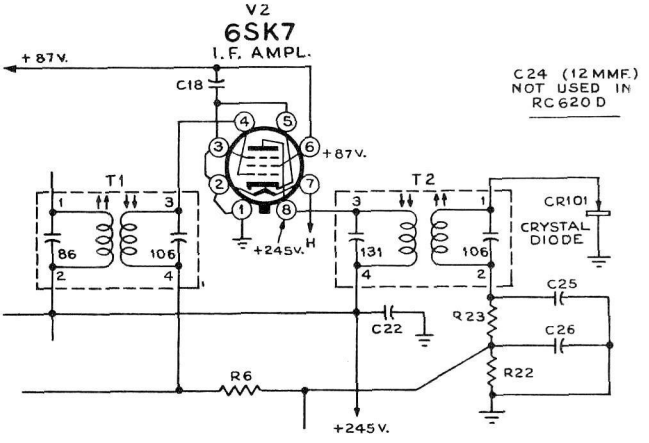

REPLACEMENT PARTS

Same as listed in 4QV8C Service Data except as listed below.

STOCK NO.	DESCRIPTION
	CHASSIS NO. RC-620D
	Add:
S-7579	Rectifier—Crystal diode rectifier (CR101)
	Delete:
S-5834	Capacitor—Ceramic, 12 mmf. (C24)

FOR 45 r.p.m. RECORD CHANGER SERVICE INFORMATION—REFER TO RP-168 SERIES SERVICE DATA.

FOR 78/33 r.p.m. RECORD CHANGER SERVICE INFORMATION—REFER TO 960282 SERIES SERVICE DATA.

Except as described above and in the replacement parts, the original service data will apply to instruments using chassis stamped RC 620D as well as for chassis stamped RC 620A.

The Model V-800 is a Radio-Phonograph Combination receiver similar to Model 4QV8C with the exception of the antenna circuit as shown below.

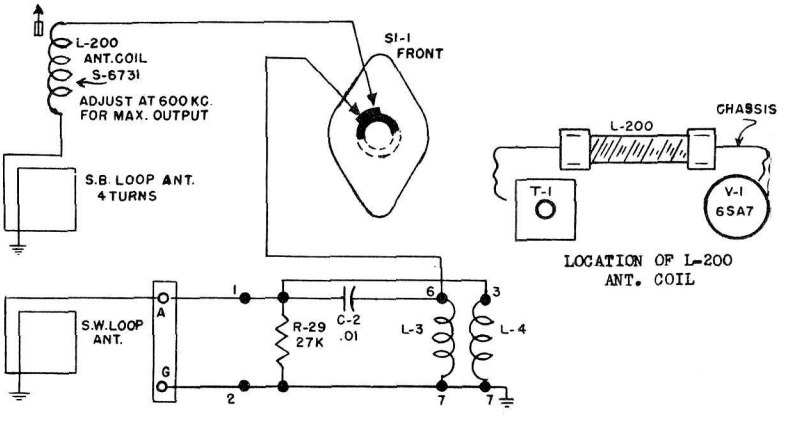

SCHEMATIC DIAGRAM OF V-800 ANTENNA CIRCUIT

For more detailed technical information, alignment and parts list, please refer to the following 4QV8C Service Note.


RCA
"HIS MASTER'S VOICE"

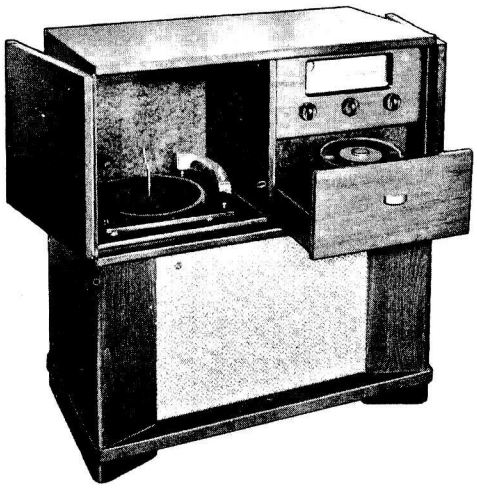

RCA VICTOR

Radio-Phonograph Combination

MODEL 4QV8C

SERVICE DATA

—1952 No. 8A—

HOME INSTRUMENT SERVICE DIVISION
RCA VICTOR COMPANY, LTD.
MONTREAL, QUE.

Specifications

Tuning Range

Standard Broadcast ("A" Band) .....535–1680 kc.
Medium Wave ("B" Band) .....2.3–7 mc.
Short Wave ("C" Band) .....7–22 mc.
Spread-Band tuning ("Microtune") may be used on all portions of the "C" Band tuning range.

Intermediate Frequency .....455 kc.

Tube Complement

(1) RCA-6SA7 .....Converter
(2) RCA-6SF7 .....I.F. Amp.–Det.–A.V.C.
(3) RCA-6SC7 .....1st A.F.–Ph. Inv.
(4) RCA-6V6GT ..... Output
(5) RCA-6V6GT ..... Output
(6) RCA-6SC7 .....Phono. Pre.-Amp.
(7) RCA-6U5/6G5 .....Tuning Eye
(8) RCA-6X5GT ..... Rectifier

Lamps

Dial Lamps (2) .....Type 44F, 6.3v., .25 amp.
Compartment Lamp .....Type 55, 6.3v., .4 amp.
Jewel Lamp .....Type 51, 6.3v., .2 amp.

Power Supply Rating

Voltage	Frequency	Watts
See below	*50 or 60 cycles	70

95 position— 85 to 105v.
117 position—105 to 130v.
150 position—135 to 165v.
190 position—170 to 210v.
234 position—210 to 260v.

Note: Shipped in 234v. position. To change, remove round cover on top of transformer case and move link to desired position.

CAUTION: Remove power cord from line receptacle before changing link position.

* Instruments are shipped for operation on 60 cycle power supply. For 50 cycle operation, conversion spring sleeves must be added to record changer motor shafts.

FOR 45 r.p.m. RECORD CHANGER SERVICE INFORMATION—REFER TO RP-168 SERIES SERVICE DATA.

FOR 78/33 r.p.m. RECORD CHANGER SERVICE INFORMATION—REFER TO 960282 SERIES SERVICE DATA.

Loudspeaker (92582-4)

Size and type .....12 in. (30.5 cm.) PM dynamic
Voice coil impedance .....3.2 ohms at 400 cycles

Tuning Drive Ratio

Main tuning .....11½:1 (5¾ turns of knob)
Microtune .....3.6 turns of knob

Power Output

Maximum .....7 watts
Undistorted .....6 watts

Record Changers

45 r.p.m. (RP-168)
Records used .....RCA 7-in. fine groove
Record capacity .....up to 10 records
Pickup (Stock No. S-5578) .....Ceramic (medium output)

78/33 1/3 r.p.m. (960282-2)
Records used .....10 or 12 in.—33 1/3 or 78 r.p.m.
Record capacity ..... ten 12 in. or twelve 10 in. records
(Record sizes and types are not to be intermixed)
Pickup (Stock No. S-5652) .....Ceramic (medium output)

Cabinet Dimensions

Height	Width	Depth
34 in.	32 in.	16¼ in.

Weight .....95 lbs.

Description

This instrument is an eight tube (including tuning eye and rectifier) three-band plus spread-band ("Microtune") radio-phonograph of conventional design with the exception of the spread-band tuning.

Spread-band tuning is accomplished by moving a small iron core in the field of the "C" band oscillator coil. This is linked with an indicator which travels along the bottom of the dial and has its own arbitrary calibration (0-40). The desired band is selected by adjusting the main tuning until its indicator is directly over the band (41, 31, etc.) marker. Then the "Microtune" knob is used for spread-band tuning. The "Microtune" indicator should be at 20 when the main tuning is being used.

Two record changers are used; RP-168 for 45 r.p.m. and 960282-2 for 78 or 33 1/3 r.p.m. Power to the motors of the record changers is controlled thru the function switch. A 6SC7 tube (twin-triode) is used as phono-preamplifier (one half for each record changer).

Alignment Procedure

Output Meter Alignment—If this method is used, connect the meter across the voice coil, and turn the receiver volume control to maximum.

Test-Oscillator—For all alignment operations, connect the low side of the test-oscillator to the receiver chassis, and keep the oscillator output low to avoid a-v-c action.

Calibration Scale

The dial scale may be readily removed from the cabinet and used as a reference during alignment or the marks on the dial back plate which correspond to the frequencies indicated on the illustration "Dial Indicator and Drive Mechanism" may be used for reference.

Dial Pointer—With the gang condenser in full mesh the dial pointer should be set to the left hand reference mark on the dial backing plate.

Step	Connect high side of test osc. to—	Tune test osc. to—	Range switch	Turn radio dial to—	Adjust for max. output
1	6SF7 grid (pin #2) in series with .05 mf.	455 kc.	A	Quiet point near 600 kc.	T2 cores top and bottom
2	6SA7 grid (pin #8) in series with .05 mf.				T1 cores† top and bottom
3	Antenna lead in series with 300 ohm resistor	Set Microtune indicator to O			
4		9.5 mc.	C	9.5 mc. signal	L5 for MAX. INDUCTANCE††
5	Antenna lead in series with 220 mmf.	Set Microtune indicator to 20			
6		1400 kc.	A	1400 kc.	C10 (osc.) C1-2 trimmer (ant.)
7		600 kc.		600 kc.	L7 (osc.) Rock gang
8			Repeat Steps 6 and 7		
9	Antenna lead in series with 300 ohm resistor	6.1 mc.	B	6.1 mc.	C9 (osc.) C5 (ant.)
10		18.2 mc.	C	18.2 mc.	C8 (osc.)‡ C4 (ant.)‡ Rock gang

† Do not re-adjust T2.

†† Set the main tuning slightly higher in frequency than the 9.5 mc. signal and adjust L5 for max. output. Repeat this procedure until no further increase in frequency can be obtained.

‡ Oscillator frequency is above signal. Use minimum capacity peak on C8 and max. capacity peak on C4.

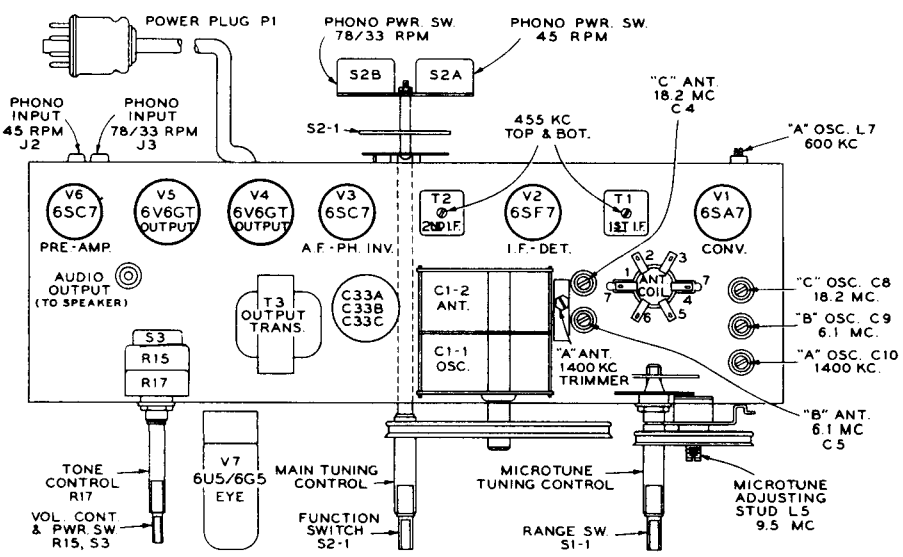

Tube and Trimmer Locations

Microtune (Spread-Band) Alignment

The conventional alignment will affect the Microtune alignment and should be done before positioning the spread-band markers.

For spread-band alignment an extremely high degree of accuracy is required of the test-oscillator, as a slight error will produce considerable inaccuracy in spread-band tuning.

Determine the exact dial settings of the test-oscillator (for frequencies at or close to the specified alignment frequencies) by one of the following methods:

1. Zero-beat the test-oscillator against short-wave stations of known frequency.
2. Check test-oscillator signals with a crystal controlled oscillator.

Connect the high side of the test-oscillator to the ANT. terminal in series with a 300 ohm resistor and the low side to chassis.

The position of the markers may be pre-set to the approximate position as shown in the illustration. "Spread-Band Marker Position."

With the range switch in "C" band position, set the Microtune pointer to the position specified below and carefully tune in the signal with the main tuning control. Position the spread-band marker so that its indication is directly under the main tuning pointer.

Band	Microtune Pointer	Test. Osc. Output
41 M	20	7.2 mc.
31 M	18.4	9.6 mc.
25 M	17.2	11.8 mc.
19 M	21.6	15.3 mc.
16 M	20	17.8 mc.
13 M	20	21.6 mc.

To tune in stations with Microtuning, the range switch knob is turned to "C" band and the main tuning control knob is turned so that the main tuning pointer is directly over the indication on the marker of the desired spread band. Spread-band tuning is then done with the Microtune control knob.

Critical Lead Dress

1. R4 (47OK) load resistor on the 6SA7 tube should be dressed away from the plate lead and terminal of that tube.
2. The oscillator capacitor R2 C12 (39 mmf., 10 ohm) must be dressed with short leads and away from the base.
3. All resistor and capacitor leads should be held to a minimum length.
4. The leads connected to the AC switches on back of the function switch must be dressed away from the contacts of the function switch.

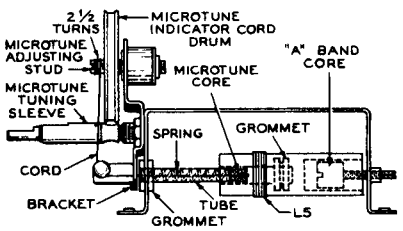

Microtuning Assembly

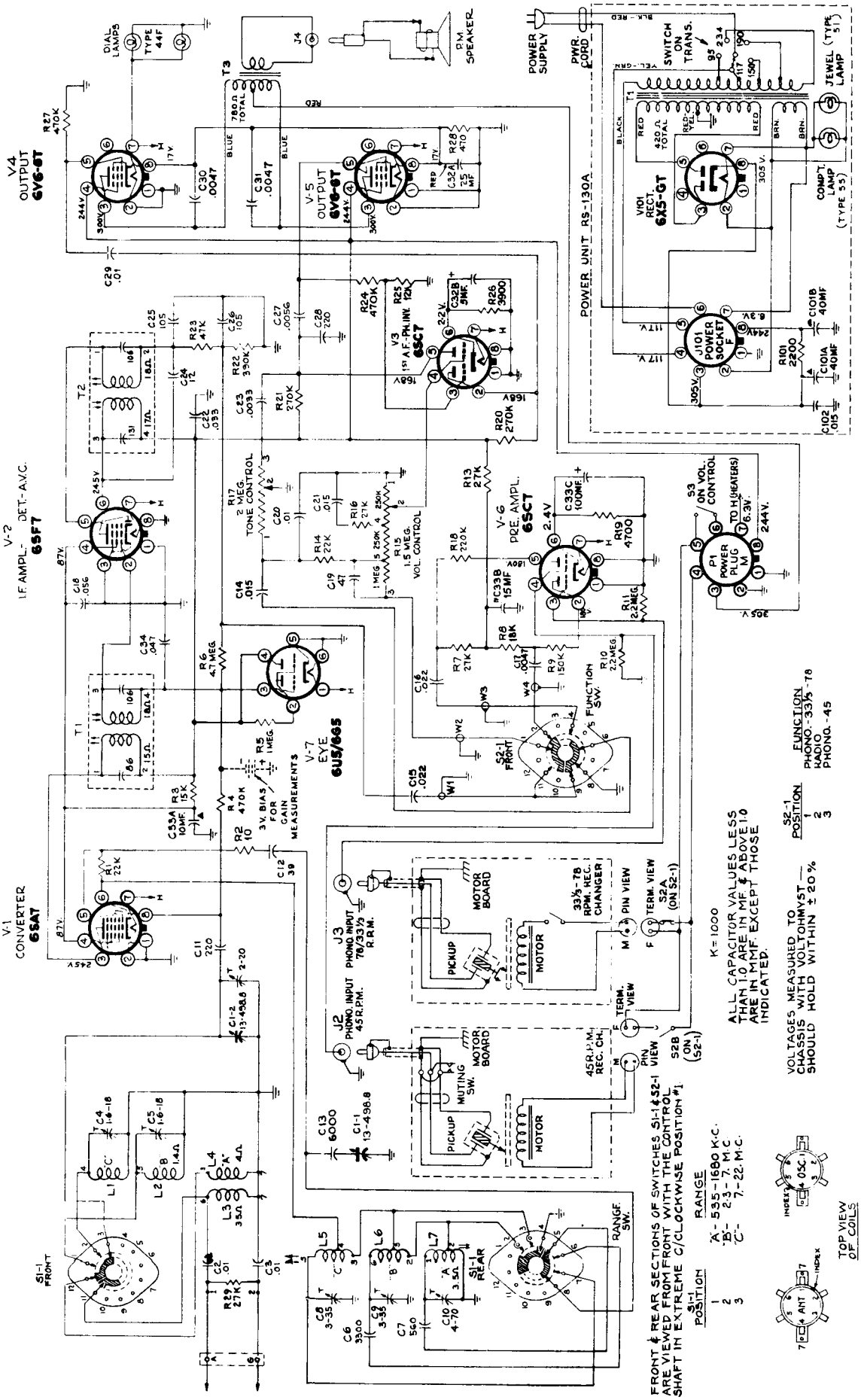

Complete Schematic Diagram

STOCK No.	DESCRIPTION
	CHASSIS ASSEMBLY
S-5833	Bracket—Microtune pulley mounting bracket
S-4725	Cable—Tuning eye cable and socket assembly complete with one megohm resistor (R5)
S-5906	Cable—Power cable and plug assembly
S-5907	Cable—Motor power cable and socket assembly—chassis to 78/33 r.p.m. record changer
S-5908	Cable—Motor power cable and socket assembly—chassis to 45 r.p.m. record changer
S-5834	Capacitor—Ceramic, 12 mmf. (C24)
S-5835	Capacitor—Ceramic, 47 mmf. (C19)
S-4439	Capacitor—Mica, 220 mmf. (C11, C28)
S-4440	Capacitor—Mica, 560 mmf. (C7)
S-4441	Capacitor—Mica, 3300 mmf. (C6)
S-4442	Capacitor—Mica, 6000 mmf. (C13)
S-4541	Capacitor—Tubular, .0033 mf., 600v. (C23)
S-4542	Capacitor—Tubular, .0047 mf., 600v, (C17)
S-4542	Capacitor—Tubular, .0047 mf., 1000v. (C30, C31)
S-4608	Capacitor—Tubular, .0056 mf., 400v. (C27)
S-4820	Capacitor—Ceramic, .01 mf. (C2, C3)
S-4610	Capacitor—Tubular, .01 mf., 400v. (C20, C29)
S-4544	Capacitor—Tubular, .015 mf., 400v. (C14, C21)
S-4732	Capacitor—Tubular, .022 mf., 400v. (C15, C16)
S-4447	Capacitor—Tubular, .033 mf., 400v. (C22)
S-4448	Capacitor—Tubular, .047 mf., 200v. (C34)
S-4449	Capacitor—Tubular, .056 mf., 400v. (C18)
S-4450	Capacitor—Trimmer capacitor, dual, 1.6-18 mmf. (C4, C5)
S-4451	Capacitor—Trimmer capacitor, triple, two sections of 3-35 mmf. and one section of 4-70 mmf. (C8, C9, C10)
S-5836	Capacitor—Electrolytic, one section of 25 mf. and one section of 5 mf. at 25 volts (C32A, C32B)
S-5473	Capacitor—Electrolytic, comprising one section of 10 mf. at 450v., one section of 15 mf. at 450v. and one section of 100 mf. at 6v. (C33A, C33B) C33C)
S-4461	Capacitor—Variable tuning capacitor (C1-1, C1-2)
S-4453	Capacitor and Resistor—Assembly comprising 39 mmf. capacitor and 10 ohm resistor (C12, R2)
S-4614	Capacitor and Resistor—Assembly comprising two 105 mmf. capacitors and one 47,000 ohm resistor (C25, C26, R23)
S-4454	Clip—I-F transformer mounting clip (2 required)
S-5837	Clip—Tuning eye mounting clip (2 required)
S-5861	Connector—8 prong male connector for power cable (P1)
S-5711	Connector—2 contact female connector for motor power cable (2 required)
S-5838	Control—Volume control, tone control and power switch (R15, R17, S3)
S-5839	Coil—"A," "B," "C" bands antenna coil (L1, L2, L3, L4)
S-5954	Coil—"A," "B," "C" bands oscillator coil (L5, L6, L7)
S-5840	Core—Adjustable core and stud for "A" band oscillator coil
S-5841	Core—Microtune tuning core complete with cord and compression spring
S-4313	Cord—Dial drive cord (approximately 55 inches required) or microtune drive cord (approximately 35 inches required)
S-4464	Grommet—Rubber grommet for mounting tuning capacitor (4 required)
S-4463	Grommet—Rubber grommet for mounting converter tube socket (2 required)
S-4533	Grommet—Rubber grommet for spacing of microtune insulating tube in oscillator coil (2 required)
S-5842	Insulation—Insulation tube for microtune tuning core.
S-5843	Insulation—Insulating washer for mounting audio output (speaker) socket
S-5844	Insulation—Insulation for mounting output transformer
S-5845	Indicator—Main dial indicating pointer
S-5846	Indicator—Microtune dial indicating pointer
S-5847	Marker—Microtune band indicator markers (1 set of 6)
S-5848	Plate—Dial back plate assembly complete with brackets, pulleys and studs
S-5849	Pulley—Microtune drive cord pulley
S-5850	Resistor—Fixed, composition, 470 ohms, 1 watt (R28)
S-4620	Resistor—Fixed, composition, 3900 ohms, ½ watt (R26)
S-5485	Resistor—Fixed, composition, 4700 ohms, ½ watt (R19)
S-5434	Resistor—Fixed, composition, 12,000 ohms, ½ watt (R25)
S-5851	Resistor—Fixed, composition, 15,000 ohms, 2 watt (R3)
S-4622	Resistor—Fixed, composition, 18,000 ohms, ½ watt (R8)
S-4556	Resistor—Fixed, composition, 22,000 ohms, ½ watt (R1, R14)
S-5470	Resistor—Fixed, composition, 27,000 ohms, ½ watt (R7, R13, R16, R29)
S-4639	Resistor—Fixed, composition, 150,000 ohms, ½ watt (R9)
S-5491	Resistor—Fixed, composition, 220,000 ohms, ½ watt (R18)
S-4559	Resistor—Fixed, composition, 270,000 ohms, ½ watt (R20, R21)
S-4624	Resistor—Fixed, composition, 390,000 ohms, ½ watt (R22)
S-4476	Resistor—Fixed, composition, 470,000 ohms, ½ watt (R4, R24, R27)
S-5852	Resistor—Fixed, composition, 2.2 megohm, ½ watt (R10, R11)
S-4478	Resistor—Fixed, composition, 4.7 megohm (R6)
S-5853	Sleeve—Main tuning control sleeve
S-5854	Sleeve—Microtune tuning control sleeve
S-4485	Spring—Main tuning or microtune indicator drive cord tension spring
S-5710	Spacer—Metal spacer for mounting tuning capacitor (4 required)
S-5855	Stud—Microtune pulley adjusting stud
S-5480	Socket—Phono input socket (dual)
S-4480	Socket—Audio output socket
S-4481	Socket—Tube socket and mounting plate (for converter tube)

STOCK No.	DESCRIPTION
No.	DESCRIPTION
S-4482	Socket—Tube socket—octal (5 required)
S-5856	Socket—Dial lamp socket and lead assembly
S-5857	Switch—Tuning range switch
S-5858	Switch—Radio—Phono switch
S-4487	Transformer—First I-F transformer (T1)
S-4662	Transformer—Second I-F transformer (T2)
S-5859	Transformer—Output transformer (T3)
S-4746	Washer—"C" washer to retain main tuning sleeve (2 required) or microtune tuning sleeve (1 required)
S-5860	Washer—"C" washer to retain microtune drive cord pulley
	POWER UNIT ASSEMBLY
S-5909	Capacitor—Tubular, .015 mf. 600v. (C102)
S-5907	Capacitor—Electrolytic, two sections of 40 mf. at 450v. (C101A, C101B)
S-5463	Cord—Power cord and plug
S-5466	Grommet—Power cord strain relief (1 set)
S-5908	Resistor—Wire wound, 2200 ohms, 5 watt (R101)
S-5910	Socket—Compartment lamp socket and lead assembly
S-5911	Socket—Jewel lamp socket and lead assembly
S-4742	Socket—Tube socket or power cable socket (J101)
S-5906	Transformer—Power transformer (T101)
	SPEAKER ASSEMBLY
S-5862	Cable—Speaker connecting cable with pin plug and pin tips
S-5863	Cone—Cone and voice coil assembly
S-5864	Speaker—Speaker complete with cone and voice coil—less connecting cable
	MISCELLANEOUS
S-4902	Board—ANT.-GND. terminal board
S-5865	Bracket—Compartment lamp mounting bracket
S-5866	Button—Plug button for 78/33⅓ r.p.m. record changer
S-5867	Catch—Door catch (2 required)
S-4646	Clamp—Dial mounting clamp
S-5868	Cloth—Grille cloth for blond cabinets
S-5869	Cloth—Grille cloth for walnut or mahogany cabinets
S-5732	Cover—Cover for RP 168 record changer mounting screw (3 required)
S-5915	Cover—Back cover for cabinet
S-5734	Decal—"Victrola" decal
S-5870	Dial—Glass dial scale
S-4499	Emblem—Single circular trademark emblem (RCA)
S-4500	Emblem—Dual circular trademark emblem (RCA Victor)
S-4502	Grommet—Rubber grommet for mounting chassis (4 required)
S-5656	Grommet—Rubber grommet for mounting 78/33⅓ r.p.m. record changer (4 required)
S-4533	Grommet—Rubber grommet for mounting speaker (4 required)
S-5872	Hinge—Door hinge for blond cabinets—top right or botton left
S-5873	Hinge—Door hinge for blond cabinets—top left or bottom right
S-5504	Hinge—Door hinge for walnut or mahogany cabinets—top right or bottom left
S-5505	Hinge—Door hinge for walnut or mahogany cabinets—top left or bottom right
S-5874	Jewel—Indicator lamp jewel
S-5875	Knob—Range switch or radio-phono switch knob for blond cabinets
S-5876	Knob—Range switch or radio-phono switch knob for walnut or mahogany cabinets
S-5877	Knob—Volume control knob for blond cabinets.
S-5878	Knob—Volume control knob for walnut or mahogany cabinets
S-5879	Knob—Tuning or microtune knob for blond cabinets
S-5880	Knob—Tuning or microtune knob for walnut or mahogany cabinets
S-5881	Knob—Tone control knob for blond cabinets
S-5882	Knob—Tone control knob for walnut or mahogany cabinets
S-5883	Lamp—Dial lamp—Type 44 frosted
S-5884	Lamp—Jewel lamp—Type 51
S-5885	Lamp—Compartment lamp—Type 55
S-5737	Nut—"T" nut for mounting 45 r.p.m. record changer
S-5886	Plate—"RCA Victor" name plate for cabinet
S-4579	Plug—Pin plug for record changer audio output cable
S-5887	Pull—Door pull (2 required)
S-5888	Pull—Record changer drawer pull
S-5889	Screw—"Trimit" head screw (#8-32 x 7/8") to mount door pulls on walnut or mahogany cabinets (4 required)
S-5890	Screw—"Trimit" head screw (#8-32 x 7/8") to mount door pulls on blond cabinets (4 required)
S-5891	Shade—Compartment lamp shade
S-5892	Slide—Record changer drawer slide
S-5893	Spacer—Metal spacer for mounting chassis (4 required)
S-4511	Spacer—Metal spacer for mounting speaker (4 required)
S-5740	Spring—Conical mounting spring for 45 r.p.m. record changer—bottom (3 required)
S-5741	Spring—Conical mounting spring for 45 r.p.m. record changer—upper left (2 required)
S-5742	Spring—Conical mounting spring for 45 r.p.m. record changer—upper right (1 required)
S-5894	Spring—Mounting spring for 78/33⅓ r.p.m. record changer (4 required)
S-5895	Stop—Door stop
S-5896	Strike—Door strike for walnut or mahogany cabinet (2 required)
S 5897	Strike—Door strike for blond cabinets (2 required)

APPLY TO YOUR RCA DISTRIBUTOR FOR PRICES OF REPLACEMENT PARTS

RCA VICTOR

AUTOMATIC RECORD CHANGER

124196 SERIES

SERVICE DATA

— 1952 No. 5 —

HEAD OFFICE SERVICE DEPARTMENT
RCA VICTOR COMPANY, LTD.
MONTREAL, QUE.

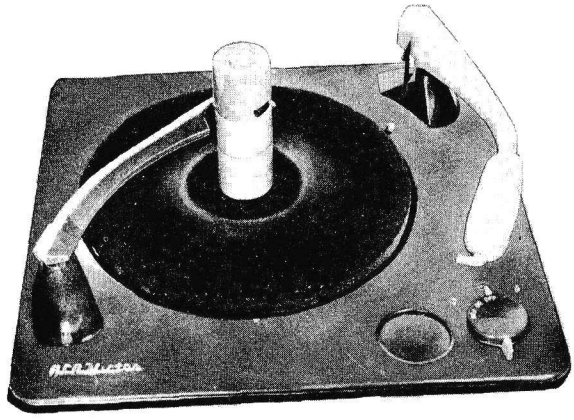

SPECIFICATIONS

Turntable speed ----------33⅓, 45 or 78 r.p.m.
Record capacity ----------Up to 14 seven-inch or
12 ten-inch
or 10 twelve-inch
or 10 ten- and twelve-inch intermixed

124196-1	115 V. 60 cycle motor—using maroon finish arm and Pickup Stock No. 75044.
124196-2	115V. 25 cycle motor—using maroon finish arm and Pickup Stock No. 75044.
124196-3	115 V. 60 cycle motor—using gold finish arm and Pickup Stock No. 75044.
124196-4	115 V. 25 cycle motor—using gold finish arm and Pickup Stock No. 75044.

INDEX

Lubrication 2
Stylus Replacement 2
Record Stabilizer Arm 2
50/60 Cycle Conversion 2
Adjustments 3
Cycle of Operation ..... 4 to 7
Exploded View of Mechanism 8
Replacement Parts ..... 9 to 12

CONTROLS

The record changer has a dual control on the motorboard and a stylus selector control on the pickup arm. The inner control (circular knob) is the OFF-ON-REJECT control. Turning this knob to the center position energizes the motor and starts the turntable, when turned to the right (clockwise) it starts the mechanism into complete automatic operation. The mechanism will shut off automatically after the last record has been played but can be shut off manually by turning this knob to the left (counter-clockwise).

The outer control (double ended lever) is the speed control. It has three normal positions, "33", "45", "78" to select the turntable speed desired and a neutral position (midway between "45" and "78"). The control should be turned to this neutral position if the changer is not expected to be in use for an extended period of time.

The stylus control has two normal positions (right and left) and one shipping position (lever pointing up). When playing 33⅓ or 45 r.p.m. records the lever is turned so that "33-45" is visible on the TOP of the lever; likewise for 78 r.p.m. records "78" should be visible on the TOP.

The removable centerpost is for use with 45 r.p.m. records having the large centerhole. It must be placed over the center spindle with the "RCA" trademark monogram FACING to the FRONT. When not in use it is placed in a well at the front of the motorboard.

To load or remove records, the record stabilizer is lifted and turned off-side. After loading it is turned to the center where it rests on top of the stack of records.

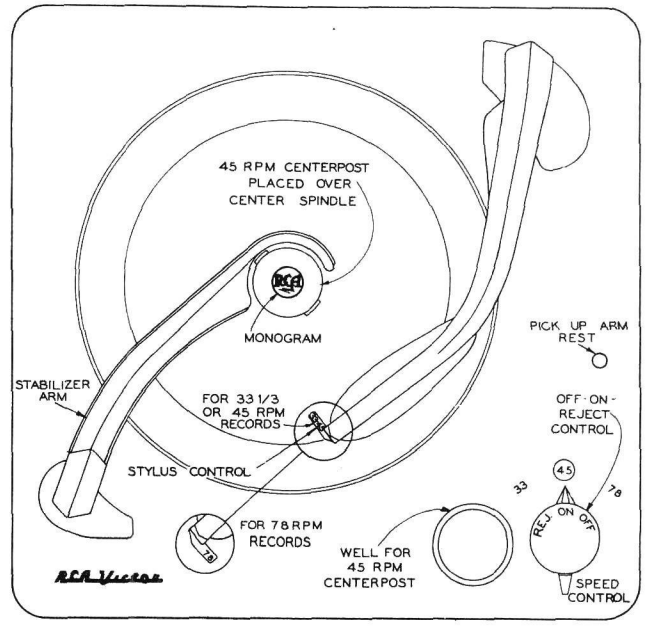

Controls

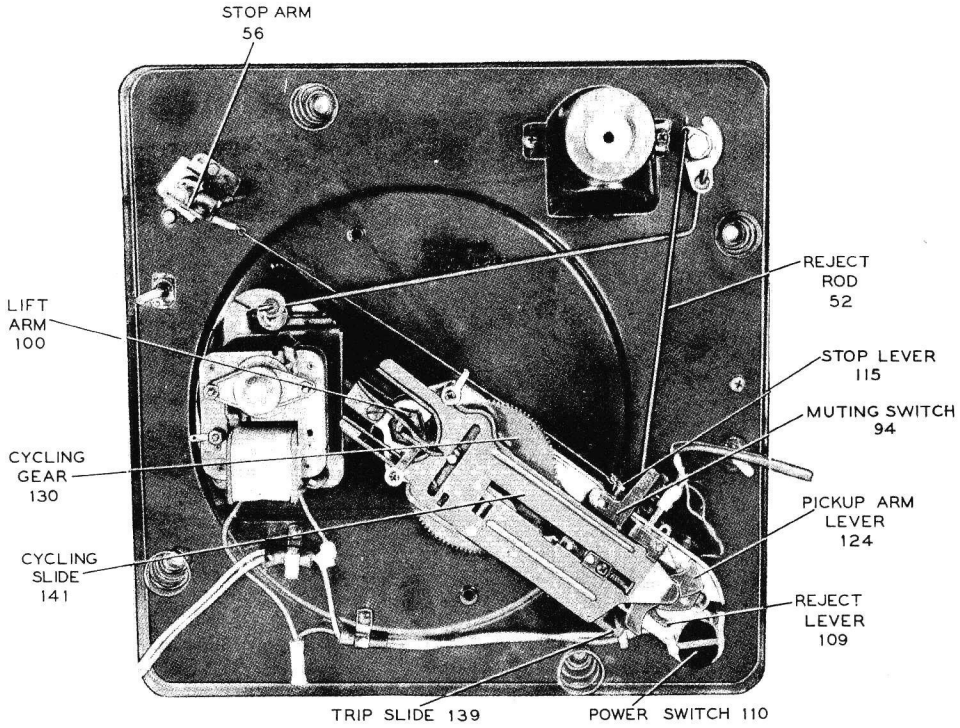

Figure 1—Bottom View

LUBRICATION

The mechanism is properly lubricated when it leaves the factory, additional lubrication should not be necessary for a long period of time. If the mechanism has unusual use or high operating temperatures, it may be necessary to lubricate more frequently.

It is suggested to use lubricant S-5262 on:

1. Pickup arm pivot.
2. Points of sliding contact with cycling slide, including:
   a. elevating rod
   b. lift arm
   c. roller on cycling cam
   d. pickup arm return lever
   e. pickup arm lever
3. End of selector lever contacting tab on cycling gear.
4. Turntable thrust bearing.
5. Sparingly on a trip slide.
6. All points of sliding contact.

Apply a small quantity of light machine oil to:

1. Trip pawl pivot.
2. Cycling engagement pawl pivot.
3. Bearing of record stabilizer.
4. Elevating rod.
5. Bearing of lift arm.
6. Bearing of reject lever.
7. Bearing of stop lever.
8. Bearing of cycling gear.
9. Motor bearings.

NOTE: Keep oil or grease away from all rubber parts.

Stylus Replacement

PICKUP NO. 75044

The styli are held in position by small thumb nuts (one for each stylus). Loosen the nut to remove stylus.

CAUTION:

The internal element of the pickups can be fractured by use of excessive force. It is advisable to grip stylus with pliers instead of holding pickup case while removing nuts.

Although the 78 and the 45-33⅓ styli are mechanically interchangeable, they should be replaced in such manner that the stylus which is coded red will contact the record when "33-45" on the stylus selector knob is visible from the top.

Record Stabilizer Arm

Two types of stabilizer arms are in use. Type "A" when raised and moved outward will remain projected beyond the edge of the motorboard. Use Stock Number 76941 (plum) record stabilizer housing. Type "B" when raised and moved outward will return to within the edge of the motorboard. Use Stock Number 77256 (plum) record stabilizer housing, and Stock Number 77257 record stabilizer return spring.

The replacement stabilizer arm (plum) Stock Number 77255 can be used with either Type "A" or Type "B".

50/60 Cycle Conversion

Models 124196-1 and 124196-3 are made for 60 cycle operation but may be converted to 50 cycle operation.

Models 124196-2 and 124196-4 are made for 25 cycle operation only.

To convert the above listed models it is necessary to replace the motor which is available under stock number S-6717.

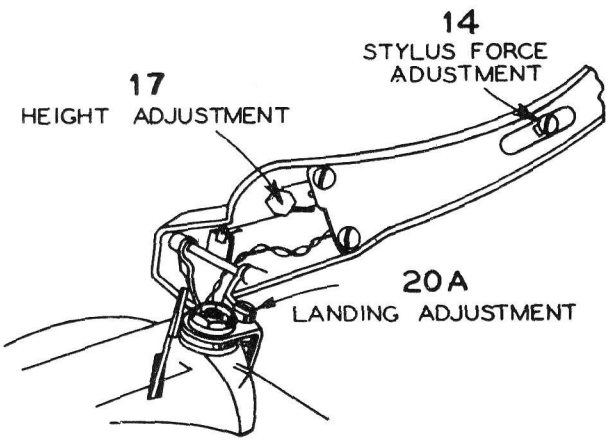

Figure 2—Adjustments

ADJUSTMENTS

LANDING ADJUSTMENT

Only one landing adjustment is necessary. The landing position of the stylus is adjusted by means of the eccentric stud (20A), mounted on the pickup arm support bracket. When adjusted for correct landing on one size of record, the landing position for other sizes of records is automatically corrected.

PICKUP ARM HEIGHT ADJUSTMENT

The pickup arm height during cycle is adjusted by means of the hex head screw (17), located in the pickup arm.

Turn control knob to "REJ" and rotate turntable by hand until arm has risen to its maximum height. Adjust screw so that stylus is 1⅜" above turntable.

STYLUS FORCE ADJUSTMENT

Stylus force should be 7½ to 9½ grams. Loosen screw (14), and move slide until the correct force is obtained.

TRIPPING

The tripping method used in this mechanism is a combination of velocity and fixed diameter. Velocity tripping is effective between 4¾" and 3¼" diameters, when the stylus moves inward ⅛" or more per revolution of the turntable. No adjustment is required.

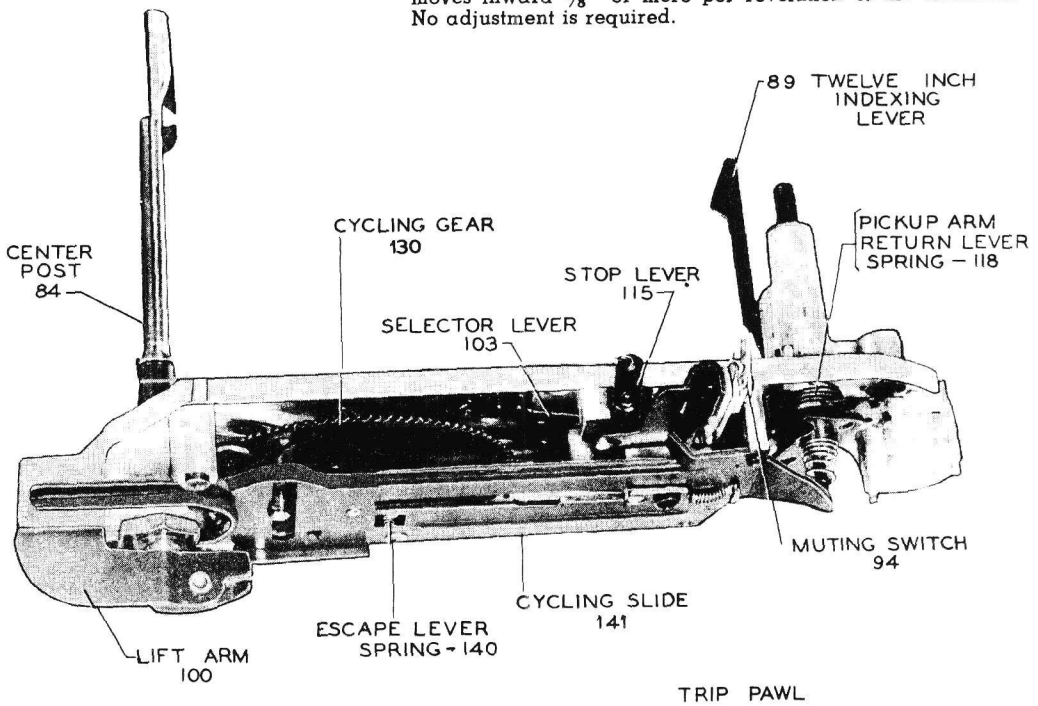

Figure 3—Slide Assembly (Complete)

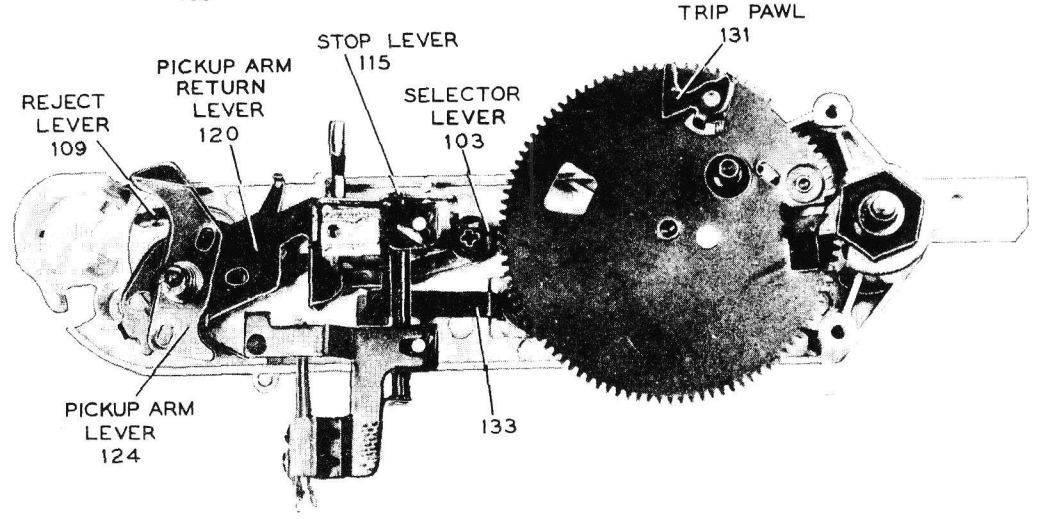

Figure 4—Slide Assembly (View with Slide Removed)

CYCLE OF OPERATION

TURN ON-OFF-REJECT CONTROL KNOB TO REJECT POSITION & RELEASE

1. The on-off-reject control knob, through the linkage of the function control lever (54), reject rod (52), and reject lever (109) actuates the power switch and the trip slide (139).
2. The closing of the power switch energizes the motor and starts the turntable rotating.

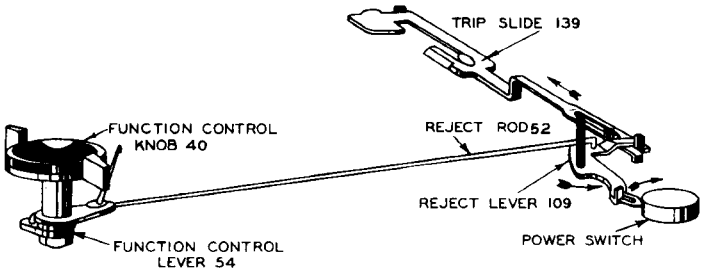

Figure 5

CYCLING STARTS

1. The trip slide (139) in its movement contacts the lower trip pawl (131) and moves both the lower and the upper trip pawls which are linked together. The movement of the upper trip pawl (129) actuates the cycling engagement pawl (130A) sufficiently to cause it to engage with the projection on the hub of the rotating turntable.
2. The contact between the cycling engagement pawl (130A) and the projection on the turntable hub gives the necessary push for the teeth in the cycling gear (130) to engage the teeth in the shaft of the turntable and thus start the change cycle.

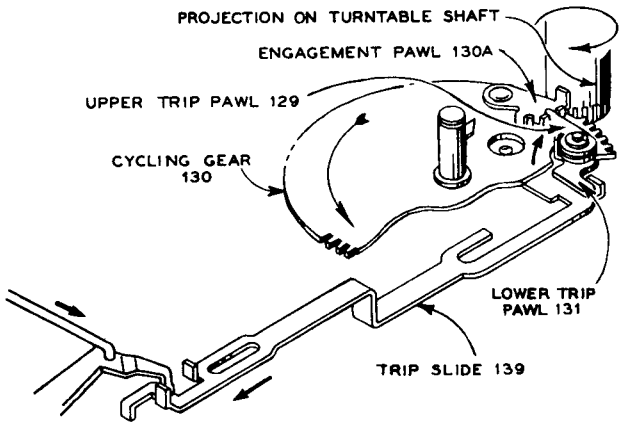

Figure 6

PICKUP ARM RISES & MOVES OUTWARD

1. As the cycling gear rotates, the stud (130B) mounted on the underside of the gear, rides inside a slot cut in the cycling slide (141). The rotation of the cycling gear pushes the cycling slide back, and later, allows it to return.
2. As the slide moves away from the center post, an incline formed on the end of the slide causes the elevating rod (123) to rise and lift the pickup arm.
3. At the same time that the elevating rod is pushed upward, the pickup arm lever (124) is also pushed up by the force transferred through the spring (125). The raising of the pickup arm lever causes the two formed dimples in the pickup arm lever to engage the two holes in the pickup arm return lever (120), and couple them together. This directs the movement of the pickup arm during change cycle.
4. The cycling slide continues to move away from the center post until the formed end of the slide pushes against the pickup arm return lever. This relieves the force of pickup arm return lever against stop lever (115). This permits the stop lever return spring (114) to return the stop lever to the normal (raised) position.
5. The end (115A) of stop lever (115) pushes trip slide back ready for the next change cycle.

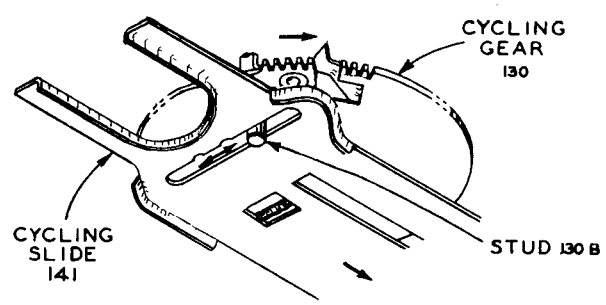

Figure 7

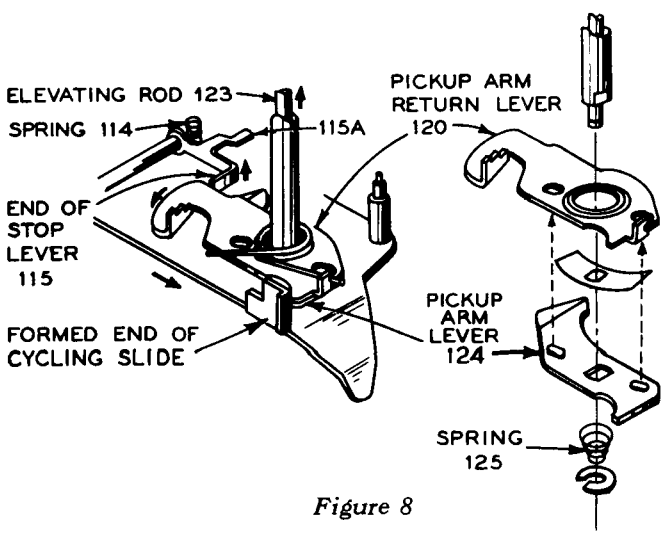

Figure 8

RECORD DROPS TO TURNTABLE

1. After the cycling slide has raised the pickup arm and is moving it outward, the lift arm (100) is actuated by the cycling slide.
2. The lift arm pushes up on the shaft extending from the bottom end of the center post. This shaft actuates the push-off mechanism inside the center post, and the record drops to the turntable.

SELECTION OF LANDING POSITION

1. During rotation of the cycling gear the riveted tab (130C) near the center of the gear, pushes down on one end of the selector lever (103) (which is pivoted in the center) thereby raising the other end causing it to latch on the end (89A) of the twelve-inch indexing lever (89).
2. The mechanism is thus automatically indexed to land on a ten inch record unless the selector lever (139) is disengaged from the end of the twelve-inch indexing lever.

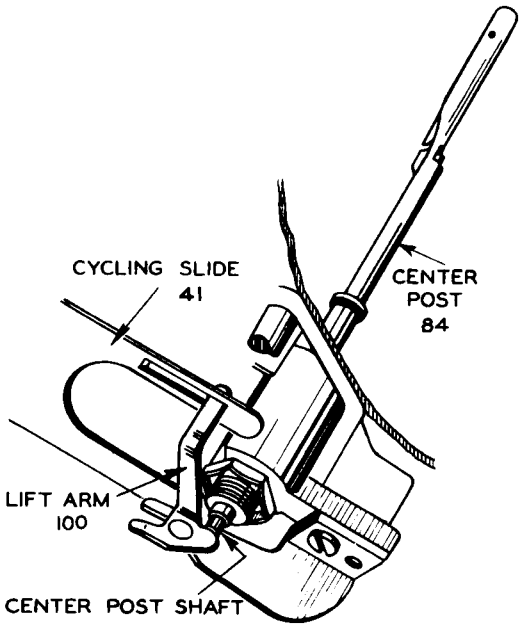

Figure 9

7 Inch Indexing:

The ten-inch indexing lever (133) is pivoted in the center and one end (133A) is held (by tension of spring) against the top surface of the cycling gear. A hole in the gear will permit the end of the indexing lever to lower and thus raise the opposite end of the lever. A projection (133B) on the lever will at the same time lift the selector lever, permitting it to engage the top step of the pickup arm return lever (120). This position allows the pickup arm to land on the edge of the seven-inch record.

10 Inch Indexing:

The ten-inch indexing lever will lift the selector lever unless a record on the turntable contacts the rubber tip of the ten-inch indexing lever (133), and prevents it from rising. When the lever is prevented from rising, the selector lever will remain in position to engage the middle step of the pickup arm return lever.

12 Inch Indexing:

When a twelve-inch record drops to the turntable, it strikes the twelve-inch indexing lever (89) and forces it backward. This disengages the end of the selector lever (103) from the edge of the indexing lever and permits the selector lever to drop down into the recess (89B) at the end of the indexing lever. This position of the selector lever causes it to engage the bottom step of the pickup arm return lever (120) and will push the pickup arm to land on the edge of a twelve-inch record.

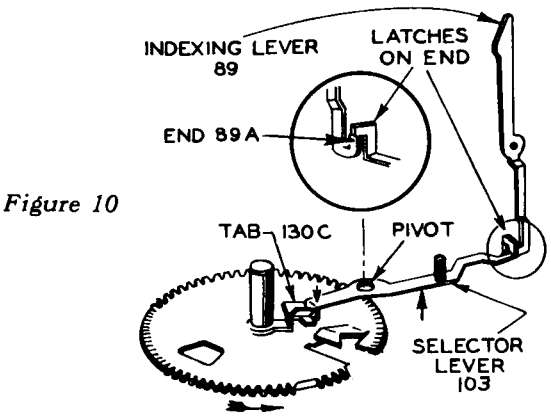

Figure 10

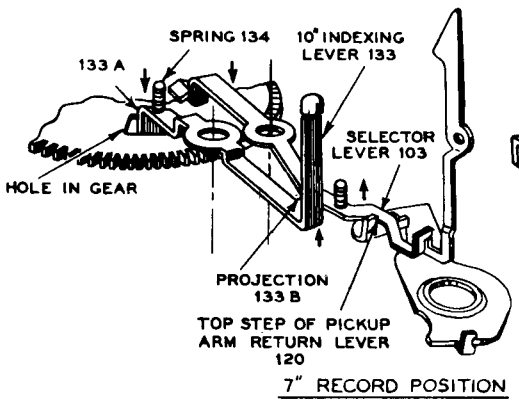

Figure 11

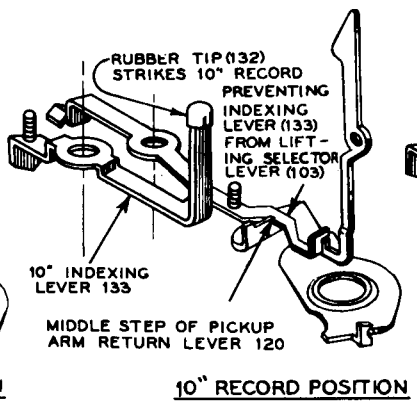

Figure 12

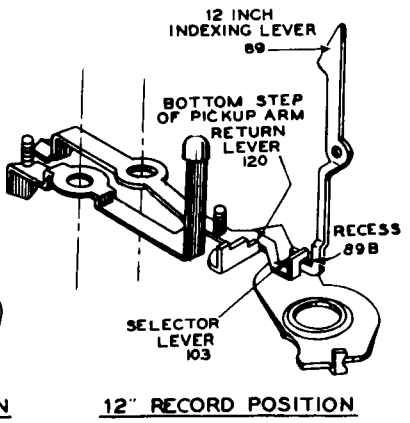

Figure 13

PICKUP MOVES IN FOR LANDING

1. As the cycling slide returns, the formed end (141A) on the slide moves back, permitting the pickup arm return lever spring (118) to expand. This causes the pickup arm return lever (120) to move the pickup inward until the pickup arm return lever comes against the selector lever (103). The pickup is now directly above the point of landing.

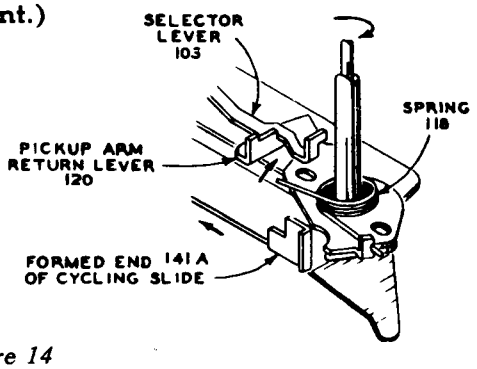

Figure 14

PICKUP LANDS ON RECORD

1. The elevating rod (123) slides down the incline on the slide permitting the pickup to land on the start of the record.
2. A cut-away portion (130D) of the teeth of the cycling gear stops the return movement of the slide before completion of cycle. The stud (130B) in the cycling gear rests in the first indentation (offset from center) of the slide to stabilize it in this position.
3. Just before the cycling gear completes cycle, a small tab (141C) on cycling slide makes contact with lower trip pawl (131) thereby moving upper trip pawl and cycling engagement pawl back. This prevents the re-engagement with the projection on the turntable hub which would start a new change cycle.
4. On the next revolution the projection on the hub of the turntable engages with a formed lug (130E) on the outer edge of the cycling gear. The cycling gear will then rotate until the second cut-away portion (130F) of the teeth again stops the movement of the slide, this time at completion of the cycle. The stud on the cycling gear rests in the second indentation (center) of the slide to stabilize it in this position.

   The purpose of this pause in the cycle is to allow the pickup to enter the starting groove of the record before the full effect of the feed-in spring is applied to the pickup arm.

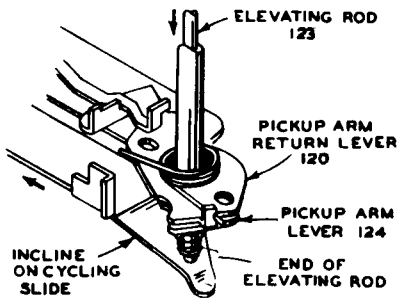

Figure 15

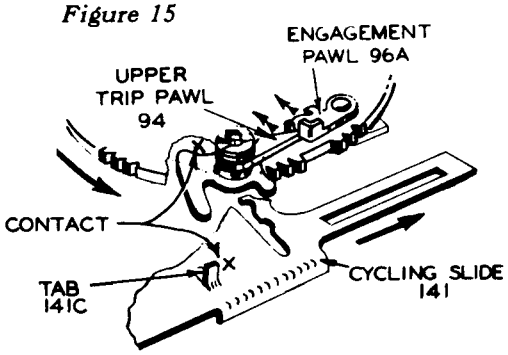

Figure 16

RECORD PLAYS

1. As the record plays, the pickup moves in toward the center of the record carrying the trip slide along. This is due to the contact made with the pickup arm lever which turns with the pickup arm pivot.
2. The trip slide contacts the lower trip pawl, causing both (lower and upper) trip pawls and the cycling engagement pawl to move slightly with each revolution of the record. This slight movement of the pawls is reversed each time the projection on the turntable hub comes in contact with the cycling engagement pawl. The back movement is taken up in the friction connection between the upper and lower trip pawls.

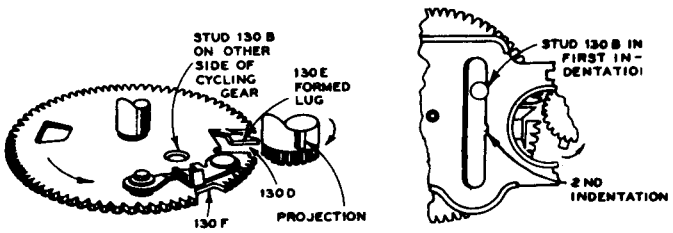

Figure 17

TRIPPING

This slight movement of the pawls continues as long as the pickup moves in at a constant rate of speed. When the stylus leaves the recorded section of the record, the rapid acceleration results in rapid movement of the cycling engagement pawl. The cycling engagement pawl assumes a position in which the projection on the turntable hub makes a positive contact and the cycling cam is pushed sufficiently for engagement between the teeth of the cycling gear and the teeth on the turntable hub. This starts change cycle.

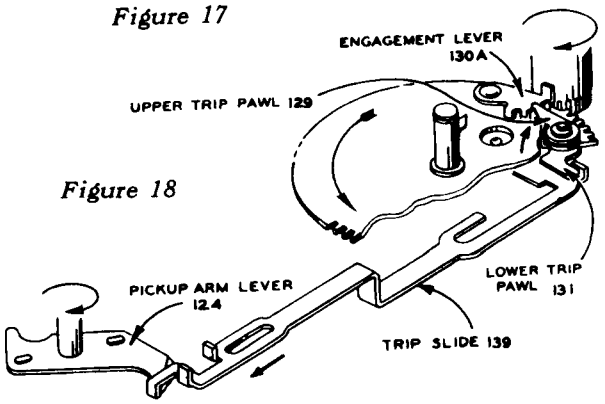

Figure 18

MECHANISM STOPS AFTER PLAYING OF LAST RECORD

After the mechanism has been tripped it again follows the preceding sequence of cycling and playing the records until the last record of the stack has been played.

1. As the last record of the stack drops to the turntable the record stabilizer drops and actuates the stop arm (115). This stop arm in turn applies force to stop lever (115) through spring (115B) and connecting wire (137). At this moment the cycling slide is in the outermost position (away from centerpost) and the end (115B) of stop lever is forced against escape lever (141B) which prevents it from lowering any further.
2. As the cycling slide returns to the out of cycle position the end (115B) of stop lever slides off the escape lever permitting the end to extend down through the slot in the cycling slide. At this time the pickup arm return lever has rotated too far to be blocked by the other end (115C) of the stop lever and the pickup is permitted to land on the record.
3. After the last selection has been played the mechanism again goes into change cycle, and the cycling slide moves into its outermost position. At this moment the force which has been applied to the stop lever from the record stabilizer causes the end (115B) to lower, thus extending further through the cycling slide. The other end (115C) of stop lever raises and blocks the pickup arm return lever which at this moment is held back by the cycling slide.
4. As the cycling slide moves back, it carries the raised trip slide along until finally the formed end (139A) of the trip slide pushes reject lever which in turn actuates the power switch (110). This removes the power from the drive motor and mechanism stops.
5. The elevating rod (124) lowers the pickup arm to the rest.

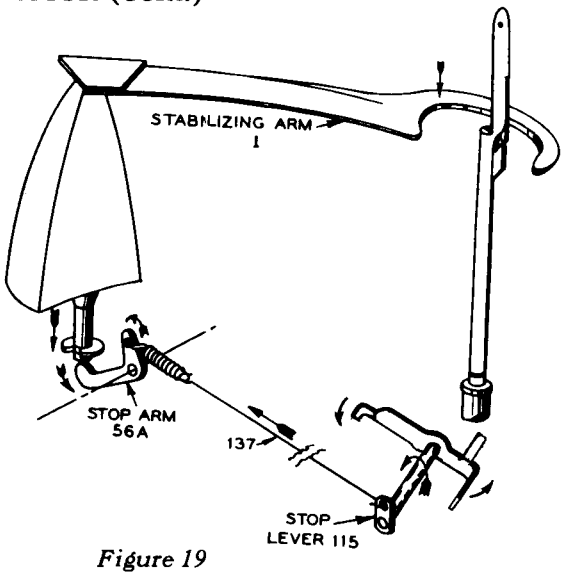

Figure 19

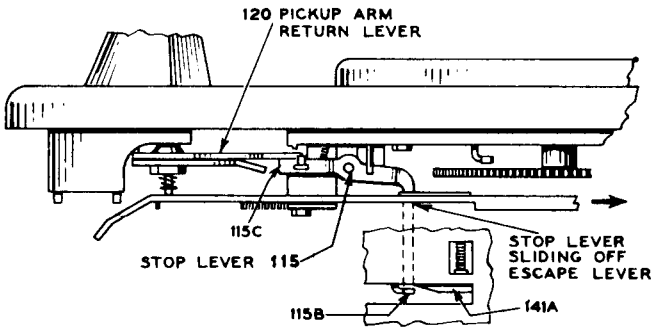

Figure 20

45 R.P.M. CENTERPOST

For playing of 45 r.p.m. records which have a 1½ inch center hole, the 45 r.p.m. centerpost is placed over the ¼ inch centerpost. The push-off finger (84A), which is part of the ¼ inch centerpost actuates the slide (24), this slide actuates the separator knives (25A & 25B) and separator shelves (26A & 26B) of the 45 r.p.m. centerpost.

As the push-off finger moves up it engages a finger (24B) of the slide (24) in the 45 r.p.m. centerpost; and, as it moves horizontally, it pushes the slide against the tension of the slide return spring (27). A projecting pin (24C) on the bottom of the slide engages both shelves and both knives and forces them to turn on their pivots. The shelves are pivoted near their center and are caused to retract as the slide is forced to move by the push-off finger. The knives are pivoted at their ends and are forced outward at the same time that the shelves are retracted. A formed spring (28) returns the shelves to the extended position.

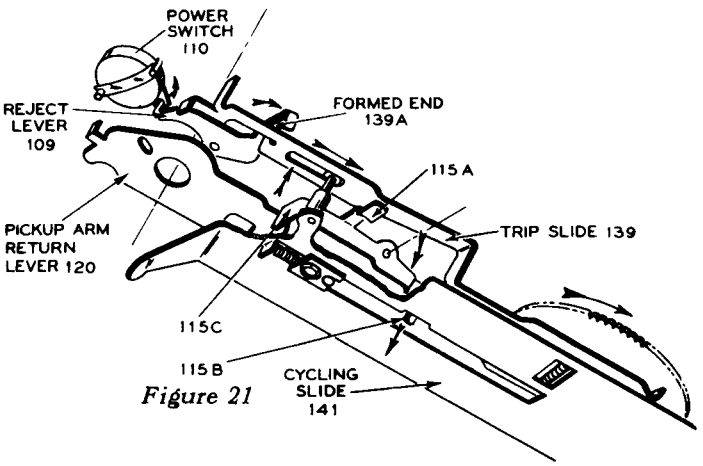

Figure 21

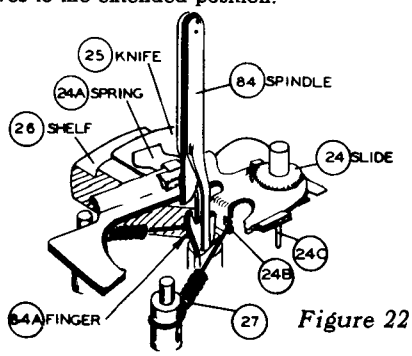

Figure 22

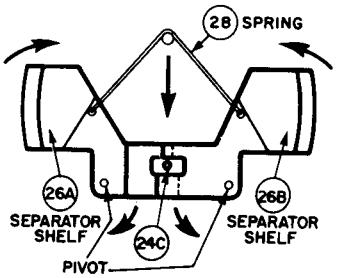

Figure 23

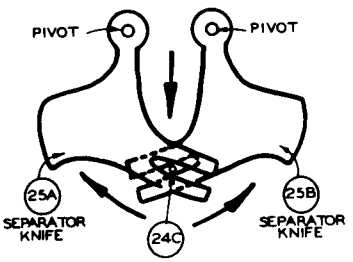

Figure 24

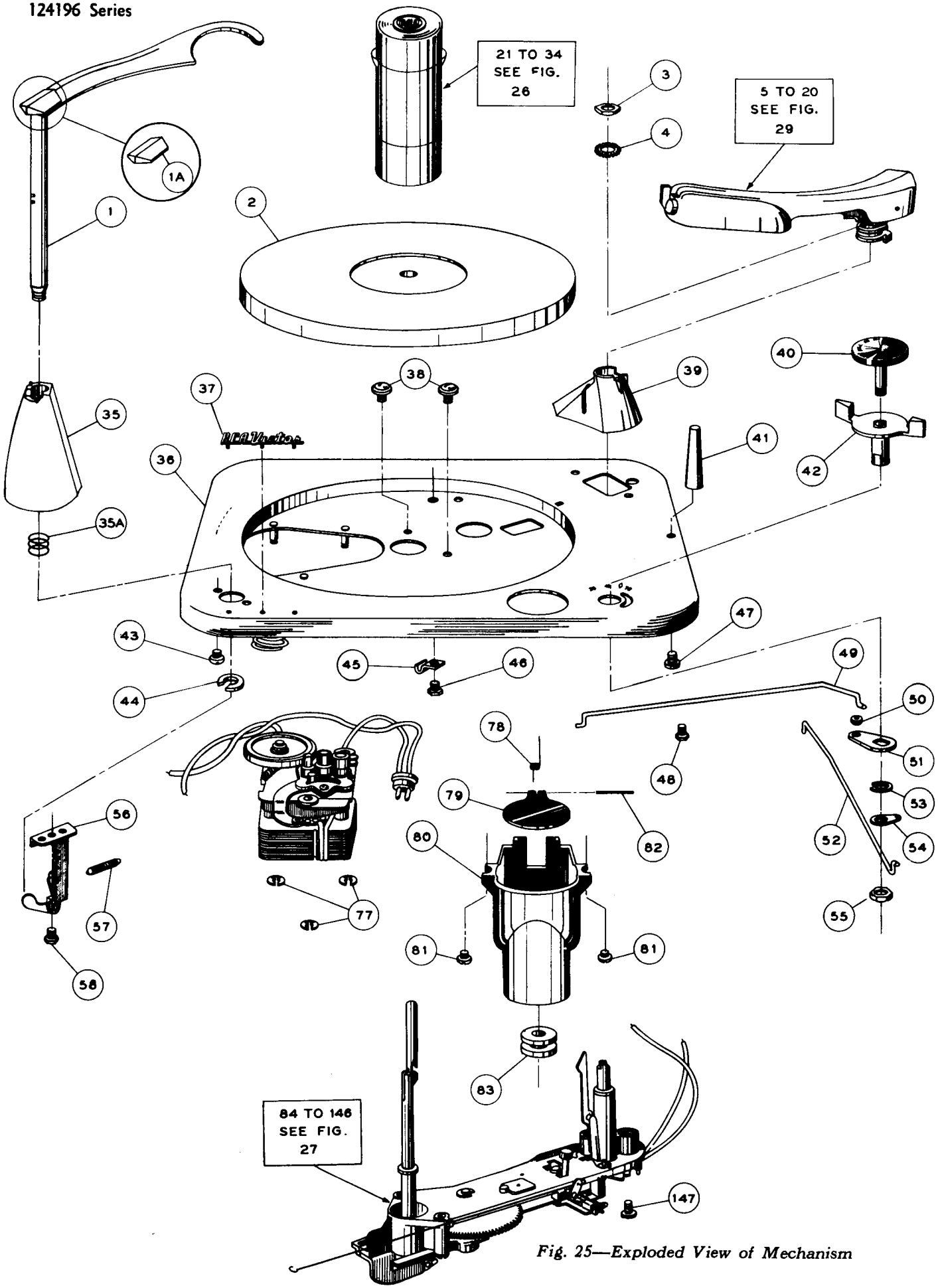

Fig. 25—Exploded View of Mechanism

ILL. NO.	STOCK NO.	DESCRIPTION
1	76913	Stabilizer—Record stabilizer—plum—complete with plastic cap for 930409-3, -4, -5, -6, -9 and -11
1A	75804	Cap—Plastic cap—maroon—for record stabilizer for 930409-3, -4, -5, -6, -9 and -11
2	77118	Turntable—Turntable and hub assembly—maroon flock.
3	76905	Nut—¼—28 hex nut (jam) for pickup arm bracket
4	———	Lockwasher—¼ external type lockwasher for pickup arm shaft
35	76941	Housing—Record stabilizer housing—plum—Type "A" (see Page 2)
35	77256	Housing—Record stabilizer housing—plum—Type "B" (see Page 2)
35A	77257	Spring—Record stabilizer return spring for use with Type "B" record stabilizer housing
36	———	Motorboard—Motorboard—complete
37	74782	Emblem—"RCA Victor" emblem
38	———	Screw—#10-24 x ⅜" binding head machine screw and internal lockwasher
39	75829	Housing—Pickup arm pivot shaft housing—plum
40	76915	Knob—Reject control knob and shaft—maroon—
41	75827	Rest—Pickup arm rest (maroon)
42	76937	Knob—Motor speed control knob and shaft.
43	———	Screw—#6-32 x ¼" hex head screw
44	75385	Washer—"C" washer to mount record stabilizer
45	———	Clamp—Cable clamp
46	———	Screw—Screw for mounting cable clamp
47	75830	Screw—#10 x ½ cross recessed pan head screw to mount pickup arm rest
48	———	Screw—#6-32 x ¼" hex head screw
49	76920	Rod—Motor speed control rod
50	77229	Grommet—Rubber grommet for motor speed control rod
51	76918	Lever—Motor speed control lever
52	76919	Rod—"On-Off"—"Reject" rod
53	75825	Washer—"C" washer for motor speed control knob and shaft
54	76917	Lever—Switch control lever
55	77227	Nut—Pal nut for reject control knob and shaft
56	76927	Arm—Stop arm assembly
57	76926	Spring—Return spring (coil type) for stop arm (⅛" I.D. x 19/32)
58	———	Screw—6-32 x 5/16" cross recessed round head screw
77	75876	Washer—"C" washer to mount motor
78	76925	Spring—Spring for 45 r.p.m. centerpost housing hinge pin
79	76922	Lid—45 r.p.m. centerpost housing lid—maroon
80	76921	Housing—45 r.p.m. centerpost housing well—less lid and rubber bumper
81	———	Screw—#10-32 x 3/16" cross recess pan head screw to mount 45 r.p.m. centerpost housing
82	76924	Pin—Hinge pin for 45 r.p.m. centerpost housing lid
83	76940	Bumper—45 r.p.m. centerpost housing rubber bumper
147	———	Screw—#10-24 x ⅜" binding head machine screw and internal lockwasher
		45 RPM CENTERPOST ASSEMBLY
21	76928	Cap—Nose cap
22	76930	Spring—Nose spring (formed)
23	76909	Screw—#4-40 x ¼" cross recessed binding head screw for nose spring
24	76933	Plate—Slider plate assembly complete with springs 24A
25	76932	Knife—Record separator knife (1 set)
26	76931	Shelf—Record support shelf (1 set)
27	76934	Spring—Slider return spring (coil type—2 in 1)
28	76935	Spring—Shelf return spring (formed)
29	———	Body—Spindle body assembly
30	76936	Screw—#4-40 x ⅞" fillister head screw for nose cap
31	———	Rotor—Die-cast rotor
32	76954	Spring—Rotor lift spring (coil) (1.168" O.D. x 1"—4-5 turns)
33	———	Lift—Rotor lift
34	76929	Bearing—Bottom bearing
		MOTORS
	30870	Connector—2 contact male connector
	77135	Motor—117 volt 60 cycle motor complete with mounting plate—less pulleys and idler wheel
	S-6717	Motor—117 Volt, 50 cycle
	S-6712	Motor—117 Volt, 25 cycle

124196-1

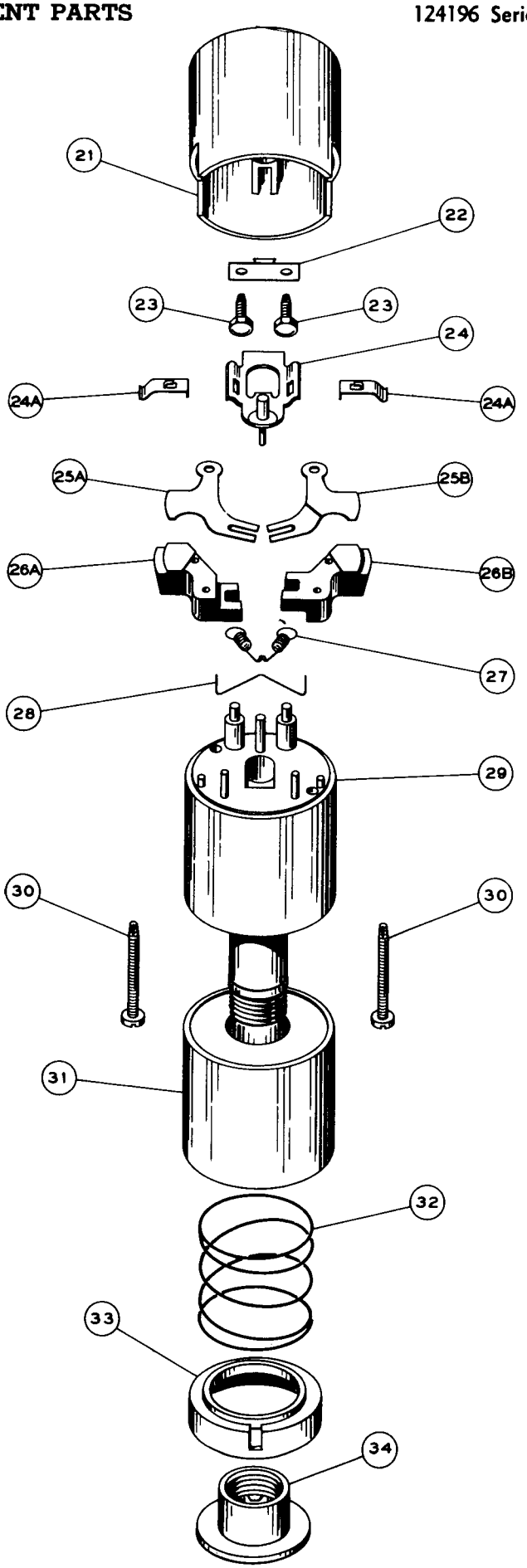

Fig. 26—45 r.p.m. Centerpost Assembly

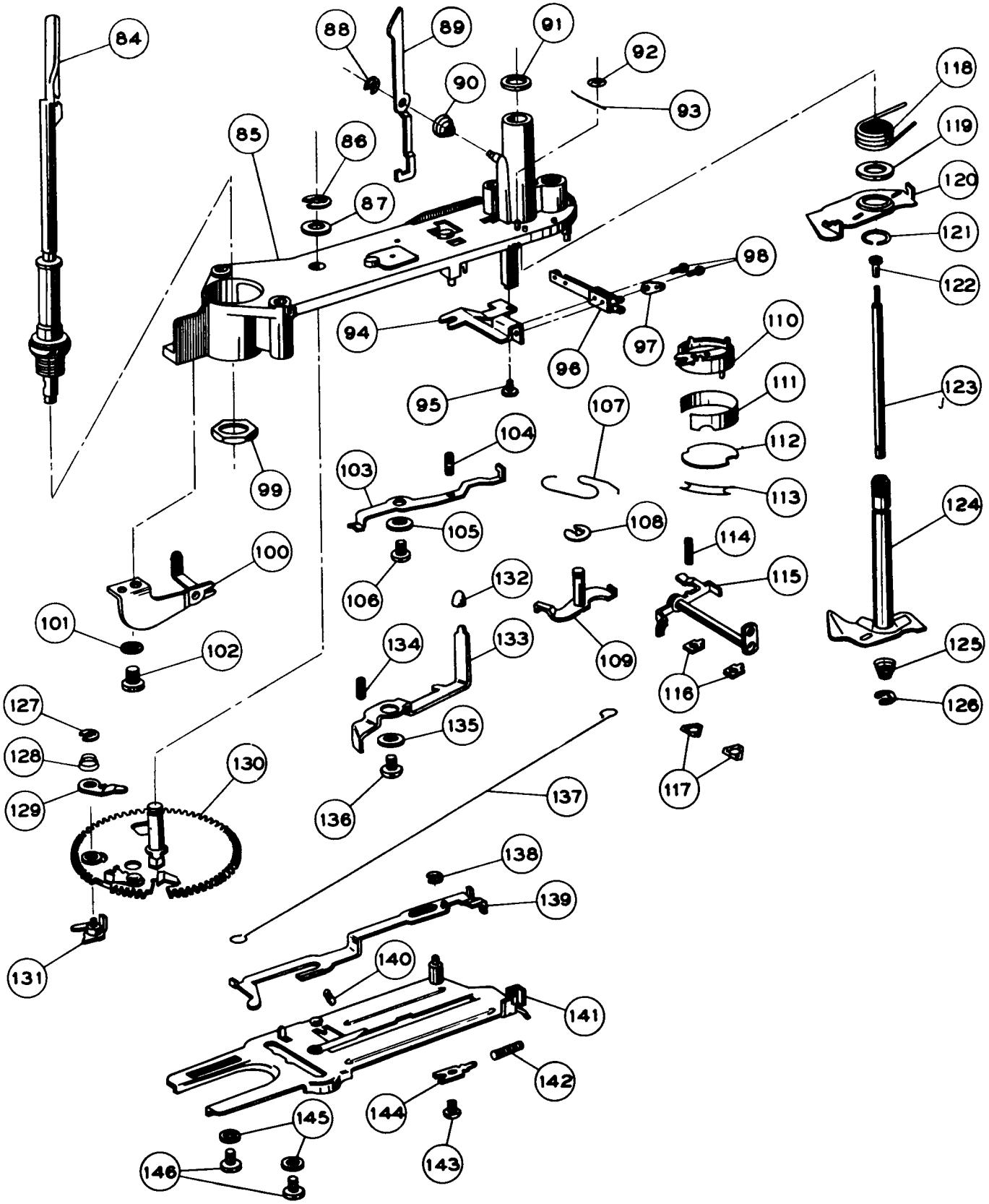

Fig. 27—Slide Assembly

ILL. NO.	STOCK NO.	DESCRIPTION
		SLIDE ASSEMBLIES
84	76904	Centerpost—33⅓-78 r.p.m. centerpost complete with bearing
85	76910	Frame—Main frame—(die-cast)
86	75373	Washer—"C" washer for mounting cycling gear
87	75845	Washer—Fibre washer for mounting cycling gear
88	75397	Washer—"C" washer for 12" indexing lever
89	75844	Lever—12" record indexing lever
90	76309	Spring—12" record indexing lever spring
91	76903	Washer—Pickup thrust washer (fibre)
92	75841	Nut—Speed nut for 12" indexing lever return spring
93	75842	Spring—12" indexing lever return spring (formed)
94	———	Bracket—Muting switch bracket
95	———	Screw—#4-40 x ¼" hex head (indented) thread cutting screw to mount muting switch assembly
96	77191	Switch—Muting switch—less mounting bracket
97	———	Terminal—#4 locking terminal for muting switch assembly
98	———	Screw—#3-48 x 13/32" binding head machine screw for muting switch
99	———	Nut—½-20 pal nut for mounting 33⅓-78 r.p.m. spindle
100	75864	Arm—Lift arm
101	———	Screw—#10-24 x ⅜" binding head machine screw and internal lockwasher
102	———	Screw—#10-24 x ⅜" binding head machine screw and internal lockwasher
103	75859	Lever—Landing selector lever
104	75860	Spring—Return spring (coil type) for landing selector lever (.110" O.D. x ⅜"—14 turns)
105	———	Washer—Metal washer (steel) (1/32" x 7/16" O.D. x .140)
106	———	Screw—#6-32 x ¼" hex head screw
107	76312	Spring—Reject spring (special)
108	75392	Washer—"C" washer for mounting reject lever
109	75856	Lever—Reject lever
110, 111, 112	75857	Switch—"On-Off" switch complete with insulating strip (111) and cover (112)
113	76908	Retainer—Switch cover retainer (flat)
114	76314	Spring—Return spring (coil type) (.125" O.D. x 7/16" —14 turns)
115	76313	Lever—Stop lever
116	77258	Strip—Bearing strip for stop lever shaft
117	76912	Nut—Speed nut for mounting stop lever bearing shafts
118	76944	Spring—Pickup arm return lever spring (coil) (.593" O.D.—3½ turns)
119	75848	Washer—Fibre washer for pickup arm pivot shaft
120	75849	Lever—Pickup arm return lever
121	75850	Retainer—Retaining ring for pickup arm return lever
122	76952	Nut—Elevating rod adjustment nut
123	76951	Rod—Elevating rod
124	76946	Shaft—Pickup arm pivot shaft and lever
125	76906	Spring—Thrust spring (conical) for elevating rod
126	77269	Ring—Retaining ring
127	75397	Washer—"C" washer
128	77249	Spring—Trip pawl spring
129	77250	Pawl—Trip pawl—upper
130	76955	Gear—Cycling gear complete with shaft and engagement pawl 130A
131	76953	Pawl—Trip pawl—lower
132	76900	Bumper—Rubber bumper for 10" indexing lever
133	76901	Lever—10" indexing lever
134	76314	Spring—Return spring (coil type) (.125" O.D. x 7/16" —14 turns)
135	———	Washer—Metal washer (steel) (1/32" x 7/16" O.D. x .140)
136	———	Screw—#6-32 x ¼" hex head screw
137	75862	Link—Control link
138	75397	Washer—"C" washer
139	76950	Slide—Trip slide
140	75861	Spring—Escape lever spring (coil) (.120" O.D. x ½" —21 turns)
141	76956	Slide—Cycling slide and cam assembly—less escape lever spring
142	77228	Spring—Stabilizing spring (coil) for cycling slide (.146" O.D. x ¾"—14½ turns)
143	———	Screw—#6-32 x ¼" hex head screw
144	75872	Plate—Bearing plate for cycling slide
145	76897	Washer—Metal washer (brass) for cycling slide
146	———	Screw—#6-32 x ¼" hex head screw
		PICKUP ASSEMBLIES
10	75044	Pickup—Crystal pickup complete with two styli
10A	75497	Stylus—Osmium tip stylus and holder (.003" r., uncoded) for 78 r.p.m.
10B	75496	Stylus—Osmium tip stylus and holder (.001" r., coded red) for 45-33⅓ r.p.m.
10C	75274	Nut—Knurled nut to mount stylus
		PICKUP ARM ASSEMBLIES
5	76902	Knob—Stylus selector knob less screw
6	76898	Screw—#2-56 x 3/16" headless set screw for stylus selector knob
7	76949	Arm—Pickup arm shell (Gold) for 124196-3, -4
7	100A001	Arm—Pickup arm shell (Maroon) for 124196-1, -2
7A	76948	Screw—Pickup arm mounting bracket pivot screw
7B	76947	Bearing—Pickup arm mounting bracket pivot bearing
8	75808	Cable—Three (3) wire pickup cable complete with connectors for 124196-3, -4
8	163A001	Cable—Three (3) wire pickup cable complete with connectors for 124196-1, -2
9	———	Screw—#4-40 x ⅛" fillister head screw to mount pickup cartridge
11	76957	Swivel—Pickup cartridge mount and swivel assembly for 124196-3, -4
11	130A001	Swivel—Pickup cartridge mount and swivel assembly for 124196-1, -2
12	75809	Spring—Pickup arm counterbalance spring
13	75810	Bracket—Pickup arm weight adjustment bracket (slide)
14	76899	Screw—#6-32 x ⅛" round head screw for pickup arm weight adjustment bracket
15	76896	Screw—#4 x ¼" binding head sheet metal screw to mount swivel assembly in arm
16	75812	Spring—Lock spring (coil type) for height adjustment screw
17	75813	Screw—Height adjustment screw (hex head—#5-40 thread)
18	76943	Spring—Tension spring (coil) for landing adjustment stud
19	76911	Cam—Landing adjustment cam
20	76907	Bracket—Pickup arm mounting bracket complete with pin
20A	75816	Stud—Landing adjustment stud (eccentric)
20B	75818	Nut—Speed nut for landing adjustment stud

APPLY TO YOUR RCA DISTRIBUTOR FOR PRICES OF REPLACEMENT PARTS

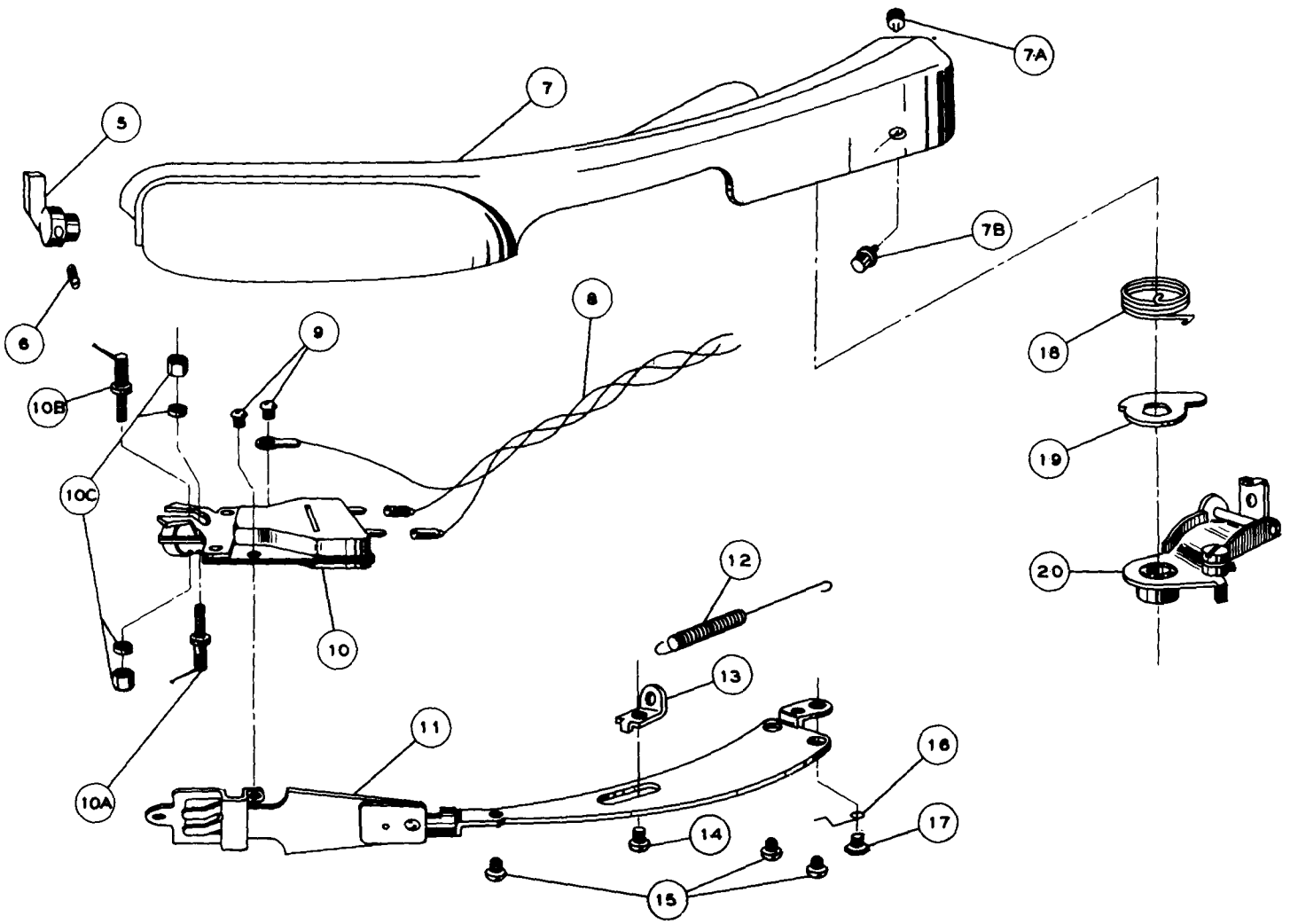

Fig. 28—Pickup Arm Assembly for 124196-1, 2, 3 and 4

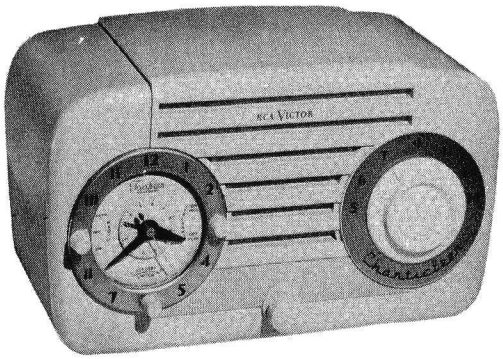

CHANTICLEER

RCA VICTOR

"HIS MASTER'S VOICE"

Five Tube AC Superheterodyne Receiver

CHANTICLEER
SERVICE DATA

— 1950 NO. 6 —

GENERAL SERVICE DIVISION
RCA VICTOR COMPANY LIMITED
MONTREAL, QUE.

Electrical and Mechanical Specifications

FREQUENCY RANGE

Standard Broadcast S.B. ---------- 540—1600 k.c.
Intermediate Frequency ---------- 455 k.c.

RADIOTRON COMPLEMENT

(1) 12BE6 ---------- Converter
(2) 12BA6 ---------- I.F. Amplifier
(3) 12AV6 ---------- Det. A.V.C. & 1st A.F.
(4) 50C5 ---------- Power Output
(5) 35W4 ---------- Rectifier

POWER OUTPUT

Undistorted ---------- 1.2 Watts
Maximum ---------- 2 Watts

LOUDSPEAKER

Type ---------- 4 inch Round P.M.
Voice coil impedance ---------- 3.4 ohms at 400 cycles

POWER SUPPLY RATINGS

Rating A ---------- 105—125 volts, 25 or 60 cycle, 30 watts

CABINET DIMENSIONS (Inches)

Height ---------- 5¾ inches
Width ---------- 10⅝ inches
Depth ---------- 5¾ inches

NOTE—For further detailed information on clock refer to RCA Victor service note on Telechron Timer, Type C-51-G5.

GENERAL DESCRIPTION

The RCA Victor Chanticleer is a five tube, single band, AC superheterodyne receiver, housed in a plastic cabinet of modern design. Features include preset automatic switching, and a 60 minute lullaby switch for the receiver and a 4 inch round PM speaker capable of handling the undistorted output of the receiver.

CLOCK-TIMER CONTROLS

1. The RADIO Control knob has three positions:—
   (1) AUTO—Connects power to radio through clock timing mechanism.
   (2) OFF—Disconnects power to radio.
   (3) ON—Connects power directly to radio.

2. The ALARM Control knob when pulled out, permits rotation of the small central disc to pre-set the time at which the radio is turned on automatically. The alarm buzzer, which is set when the knob is out, operates 10 minutes after the radio is turned on.

When the knob is pushed in, the alarm presetting mechanism is disengaged and the alarm buzzer is silenced.

3. The LULLABY SWITCH knob can be set to turn off the radio automatically after an interval of from zero (0) to sixty (60) minutes has elapsed.

4. The TIME-SET Control at the back of the receiver, directly behind the clock, is used to set the clock hands to the correct time.

CLOCK-TIMER OPERATION

Operation of the clock-timer may be most readily illustrated by means of the following example. Assume that it is now 6.30 p.m. and that it is desired to have the radio turn on automatically at 9 p.m.

1. Pull out the ALARM Control knob and rotate counterclockwise until "9" on the small central disc falls under the narrow pointer which is opposite (but attached to) the clock hour hand. Push the knob in again unless alarm buzzer action is required.

2. Set RADIO control to AUTO. The radio will be turned on automatically at 9 p.m.

After listening to the radio until 10.30 p.m. assume that it is desired to re-set the clock-timer to turn the radio on again at 7 a.m.

3. Pull out the ALARM control knob and rotate counterclockwise until "7" on the small central disc falls under the narrow pointer which is opposite (but attached to) the clock hour hand.

4. Set RADIO control to OFF, then back to AUTO. The radio is now off and will be turned on again at 7 a.m. The alarm buzzer will operate 10 minutes later.

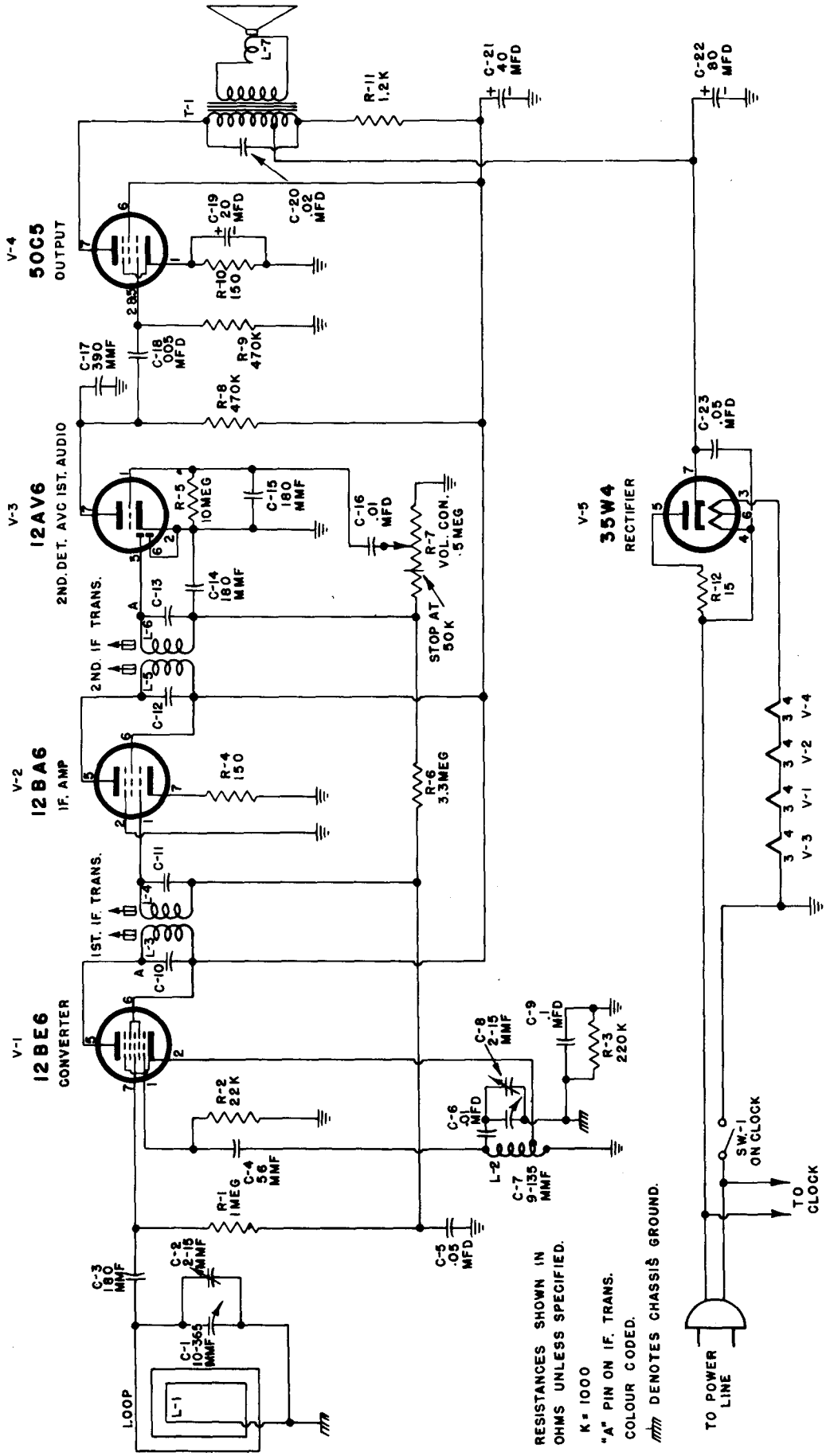

Fig. 1. Schematic Diagram

CLOCK-TIMER OPERATION (Cont'd.)

The clock timing mechanism may also be set to operate the alarm buzzer without simultaneously turning on the radio. Proceed as in section 3, then set RADIO control to OFF. The alarm will operate 10 minutes after the time set on the small central disc.

If it is desired to listen to the radio while going to sleep, the LULLABY SWITCH may be set to turn off the radio automatically after an interval of from zero (0) to sixty (60) minutes has elapsed, even though the RADIO control is set at OFF or to AUTO. It will not turn off the radio if the RADIO control is set at ON. The LULLABY SWITCH knob pointer should be set between zero (0) and sixty (60) in accordance with the number of minutes operation desired.

RADIO CONTROLS AND OPERATION

The radio may be turned on independently of the clock timing mechanism by turning the clock's RADIO control to ON, or may be turned on automatically through the clock timing mechanism as outlined under Clock-Timer Controls.

The VOLUME control is operated by the small central knob. Set it for the desired sound level.

The TUNING control is operated by the large knob at the right. The dial scale is calibrated in kilocycles less two zeros, except at 550 kc. where the dial calibration is 5 instead of 5.5. Rotate the tuning knob slowly over a narrow range at a frequency where the desired station is located, until the station is received with maximum volume; then re-adjust the sound level by means of the volume control. Never use the tuning control to adjust volume as the practice results in distorted tone quality and deficient bass response.

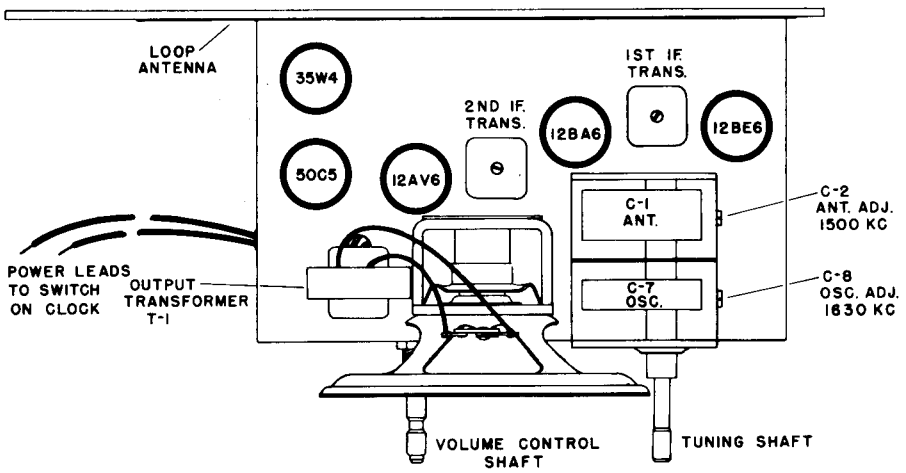

Fig. 2. Chassis Layout

ALIGNMENT PROCEDURE

For all alignment operations keep test oscillator output as low as possible to avoid A.V.C. action. On A.C. operation an isolation transformer (115v/115v) may be necessary if the test oscillator is also A.C./D.C. operated.

In order to obtain best results, it is advisable to align the 455 KC I.F.'s with the help of a cathode ray oscilliscope. If this equipment is not available, use the method outlined below in the alignment chart.

ALIGNMENT CHART

Order of Alignment		TEST OSCILLATOR: Connect "HI" Side To	Connect "LO" Side To	Dummy Antenna	Frequency Setting	Range Selector	Receiver Dial Setting	Circuit To Adjust	Adjustment Symbols	Notes
A.M. I.F. ALIGNMENT	1	12BA6 1st I.F. Grid	Ground thru.01 mfd.	.01 mfd.	455 K.C. 30% mod. 400 Cy. A.M.		High freq. end of dial	2nd I.F. Trans.	L5, L6	Adjust for max. A.C. voltage across voice coil.
	2	12BE6 Converter Grid	Same	Same	Same		Same	1st I.F. Trans.	L3, L4	Same
S.B. ALIGNMENT	3	Ant. Lead	Ground thru.01 mfd.	47 m.m.f.	1600 K.C. 30% mod. 400 Cy. A.M.		High freq. end of dial	Oscillator	C8	Adjust for max. A.C. voltage across voice coil.
	4	Same	Same	Same	1500 K.C. 30% mod. 400 Cy. A.M.		1500 K.C. on dial	Ant.	C2	Same

REPLACEMENT PARTS FOR CHANTICLEER

Insist on Genuine Factory Tested Parts, which are readily identified and may be purchased from Authorized Dealers.

STOCK NO.	DESCRIPTION	LIST PRICE
	CHASSIS ASSEMBLY	
73867	Capacitor-Ceramic 56 mmf. (C4)	
S-5695	" -Mica 180 mmf.(C3,C14,C15)	
S-5694	" -Mica 390 mmf.(C17)	
	" -Paper .005 Mfd. 400 V.(C18)	
	" -Paper .01 " 200 V.(C16)	
	" -Paper .01 " 400 V.(C6)	
	" -Paper .02 " 400 V.(C20)	
	" -Paper .05 " 200 V.(C5)	
	" -Paper .05 " 400 V.(C23)	
	" -Paper .1 " 400 V.(C9)	
S-5574	" -Electrolytic 80-40-25 mfd. (C22,C21,C19)	
S-5573	Condenser-Variable (C1,C2,C7,C8)	
S-5689	Coil-Osc. coil (L2)	
	Resistor-15 ohms 1/2 watt (R12)	
	" -150 ohms 1/2 watt (R10,R4)	
	" -1200 ohms 1 watt (R11)	
	" -22,000 ohms 1/2 watt (R2)	
	" -220,000 ohms 1/2 watt (R3)	
	" -470,000 ohms 1/2 watt (R8,R9)	
	" -1 Megohm 1/2 watt (R1)	
	" -3.3 Megohm 1/2 watt (R6)	
	" -10 Megohms 1/2 watt (R5)	

STOCK NO.	DESCRIPTION	LIST PRICE
	CHASSIS ASSEMBLY- Cont'd.	
S-4487	Transformer-1st I.F.(L3,L4,C10,C11)	
S-5570	" -2nd I.F.(L5,L6,C12,C13)	
S-5572	Volume Control-(R7)	
	SPEAKER ASSEMBLY	
S-5575	Cone - Cone and Voice Coil Assembly	
S-5571	Output Transformer	
	MISCELLANEOUS ASSEMBLIES	
S-5576	Cabinet - Ivory	
S-5693	Cover-Back cover	
S-5568	Dial-Tuning Dial	
S-5690	Knob-Dial Knob	
S-5691	Knob-Volume Control	
S-5692	Loop-Antenna loop (L1)	
S-5569	Loop & back cover assembly	

Only items listed under stock numbers are available as Replacement Parts.

All parts and prices subject to change or withdrawal without notice.

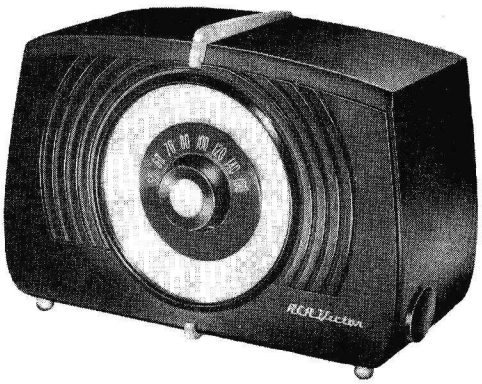

RCA VICTOR

"HIS MASTER'S VOICE"

AC-DC RADIO RECEIVER

LITTLE MASTER IV

—1950 No. 21—

GENERAL SERVICE DIVISION
RCA VICTOR COMPANY LIMITED
MONTREAL, QUE.

Electrical and Mechanical Specifications

Tuning Range ..... 540-1600 kc

Intermediate Frequency ..... 455 kc

Tube Complement
- (1) RCA 12BE6 ..... Converter
- (2) RCA 12BA6 ..... I-F Amplifier
- (3) RCA 12AV6 ..... Det.—A.V.C.—A-F Amp.
- (4) RCA 50L6GT ..... Output
- (5) RCA 35W4 ..... Rectifier

Power Supply Rating
115 volts a.c., 50 to 60 cycles or d.c. ..... 30 watts

Dial Lamp ..... type 44, 6-8 volts, .25 amp.

Power Output
- Undistorted ..... 1.25 watts
- Maximum ..... 1.5 watts

Loudspeaker
- Size and type ..... 4 in. PM
- Voice coil impedance ..... 3.2 ohms at 400 cycles

Cabinet Dimensions
Height ... 8⅝" Width ... 12¼" Depth ... 6"

Weight ..... 6 lbs.

REPLACEMENT PARTS FOR LITTLE MASTER IV

Insist on genuine factory tested parts, which are readily identified and may be purchased from authorized dealers.

STOCK NO.	DESCRIPTION
	CHASSIS ASSEMBLY
S-4308	Capacitor-68 MMF ±20% 500V.(C2)
	" -150 " +-20% 500V.(C12)
	" -390 " +-10% 500V.(C6)
	" -.005 Mfd.+-20% 200V.(C4,C7)
	" -.02 Mfd. ±20% 200V.(C5)
70613	" -.03 " ±10% 400V.(C8)
	" -.05 " +-20% 400V.(C3,C11)
	" -.1 Mfd.±10% 400V.(C10)
*S-5717	" -Electrolytic 30-50 Mfd. ±10% 150V.(C9A,C9B)
*S-5718	" -Variable tuning(C1-1,C1-2)
*S-5726	Coil-Oscillator coil (L1,L2)
*S-5719	Control-Vol.Control & Sw.
S-3467	Cord-Power Cord
	Resistor-47 ohms ±20% ½W.(R13)
	" -100 " " " (R3)
	" -150 " " " (R9)
	" -1200" ±10%,1W.(R10)
	" -22,000 ±20%,½W.(R1)
	" -47,000 ±20%,½W.(R12)
	" -220,000 ±20%,½W.(R7)
	" -470,000 ±20%,½W.(R8)
	" - 1 Meg. ±20%,½W.(R2)
	" -3.3 Meg." " "" (R4)
	" -4.7 " " " "" (R6)
	Lamp-Mazda No.44
*S-5722	Loop-Loop Coil only
*S-5720	Transformer-1st IF transformer (T1)
*S-5721	" -2nd IF " (T2)
*S-5729	" -Output " (T3)
	SPEAKER ASSEMBLY
*74165	Speaker-Complete 4" PM
*S-5575	Speaker Cone

STOCK NO.	DESCRIPTION
	MISCELLANEOUS ASSEMBLIES
*S-5723	Back-Cabinet back cover less loop for (Maroon, Green)
*S-5996	Back-Cabinet back cover less loop for (Ivory)
*S-5724	" -Cabinet back cover with loop for (Maroon, Green)
*S-5997	" -Cabinet back cover with loop for (Ivory Cabinet)
*S-5998	Bracket-Phono socket and bracket
*S-5716	Cabinet-Maroon
*S-5999	" -Ivory
*S-6000	" -Green
*75492	Decal-Phono decal
S-5661	Emblem -RCA Victor
*75495	Foot-Cabinet foot
*S-6003	Grille-Speaker grille
*75659	Jewel-Pilot lamp jewel
*S-5727	Knob-Tuning maroon
*75606	" " ivory
*S-5728	" Volume-maroon
*75605	" Volume-ivory
74336	Nut-Spring nut to fasten decorative strip
74340	Nut-Spread nut to fasten foot
*75489	Screen-Grille screen for maroon, green Cabinet
*S-6005	Screen-Grille screen for ivory cabinet
74734	Spring-Retaining spring for knob
74697	Socket-Pilot lamp socket
*75490	Strip-Decorative strip (gold) for cabinet top
*75491	Strip-Decorative strip (gold for cabinet front bottom
	*Indicates new stock items

Only items listed under Stock Numbers are available as Replacement Parts.
All parts subject to change or withdrawal without notice.

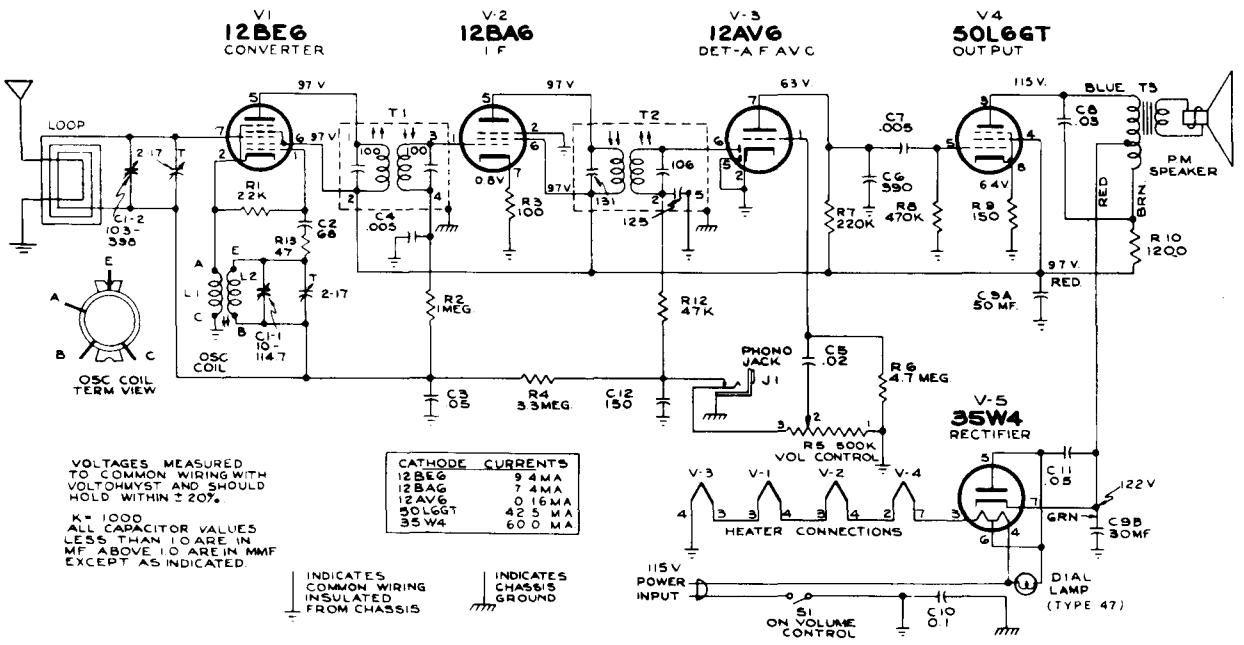

Schematic Circuit Diagram

Lead Dress

1. Dress all capacitors down against chassis.
2. Connect outside foil of all capacitors as indicated in schematic diagram.
3. Locate C9 in its mounting clip so that it butts against chassis.
4. Dress power cord leads away from R11.

Attachment of Record Player

The audio output cable of the record player should be terminated with a pin plug.

Plug the cable into the receptacle which is accessible through the side of the cabinet.

Insertion of the cable plug into the receptacle removes radio signal from the volume control. The record player cable must be removed from the receptacle to permit radio operation.

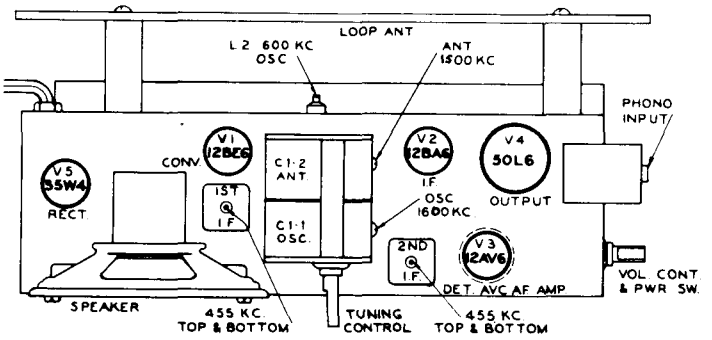

Tube and Trimmer Locations

Alignment Procedure

Before aligning the receiver, set the gang condenser for maximum capacity and then set the dial knob opposite 55 on left hand end of the dial.

When only a portion of the circuit is to be aligned select the required portion and perform all the remaining steps.

In order to obtain best results, it is advisable to align the 455 KC I.F.'s with the help of a cathode-ray ocilloscope. The scope should be connected across the volume control. If this equipment is not available, use the method outlined below in the alignment chart.

NOTE: If the test-ocillator is ac/dc operated, it may be necessary to use an isolation transformer (117 v./117 v. for the receiver during alignment.

Alignment Chart

Order of Alignment		TEST OSCILLATOR				RECEIVER				
		Connect "HI" Side to	Connect "Low" Side to	Dummy Antenna	Frequency Setting	Range Selector	Receiver Dial Setting	Circuit to Adjust	Adjustment Symbols	Notes
I.F. Alignment	1	V2 - 12BA6 Pin #1	Ground	.1 Mfd.	455 KC		Low Frequency (end)	2nd I.F. Trans.	Top & Bottom	Max. Out
	2	V1 - 12BE6 Pin #7	"	"	"		" "	1st I.F. Trans.	"	" "
R.F. Alignment	3	Radiate Signal	"		600 KC		600 KC	Oscillator	L2 Core	" "
	4	"	"		1600 KC		1600 KC	"	Trimmer	" "
	5	"	"		1500 KC		1500 KC	Ant.	"	" "
	6	REPEAT STEPS 3, 4 & 5.								

RCA VICTOR

"HIS MASTER'S VOICE"

MASTER X

Six-Tube, Two-Band, A-C, D-C, Superheterodyne Receiver

TECHNICAL INFORMATION AND SERVICE DATA

1949 No. 1

GENERAL SERVICE DIVISION • RCA VICTOR COMPANY LTD.

Electrical and Mechanical Specifications

FREQUENCY RANGE

Broadcast ..... 540-1600 kc
Short Wave ..... 9.3-12.2 mc

INTERMEDIATE FREQUENCY ..... 455 kc

TUBE COMPLEMENT

(1) RCA-12SK7 ..... R-F Amplifier
(2) RCA-12SA7 ..... 1st Det.—Osc.
(3) RCA-12SK7 ..... I-F Amplifier
(4) RCA-12SQ7 ..... 2nd Det., A.V.C., and A-F Amplifier
(5) RCA-35L6-GT/G ..... Power Output
(6) RCA-35Z5-GT/G ..... Rectifier

PILOT LAMPS ..... Mazda No. 1490, 3.2 volts

POWER OUTPUT

Undistorted ..... 1.0 watts
Maximum ..... 1.5 watts

LOUDSPEAKER

Size ..... 4 x 6" elliptical P.M.
V.C. Impedance ..... 3.4 ohms at 400 cycles

POWER SUPPLY RATING

105-125 volts, AC. 50 or 60 cycles, or DC ..... 27.6 watts

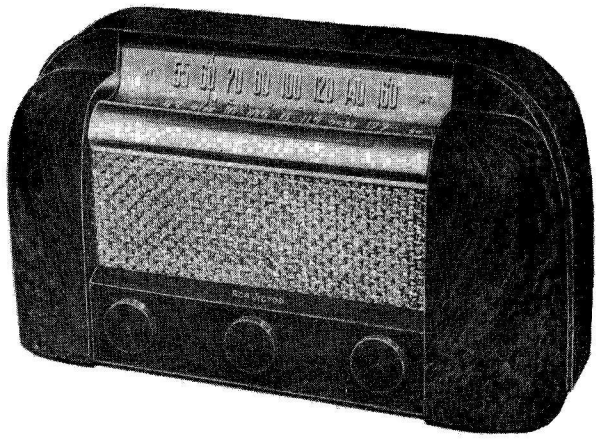

REPLACEMENT PARTS FOR MASTER X

Insist on genuine factory tested parts, which are readily identified and may be purchased from authorized dealers.

STOCK NO.	DESCRIPTION	LIST PRICE
	CHASSIS ASSEMBLY	
73294	Capacitor-Trimmer (C4, C10).....	
39616	Capacitor-33 MMF. Mica (C7).....	
71924	Capacitor-56 MMF. Ceramic (C9).....	
39636	Capacitor-220 MMF.Mica (C8).....	
S-4920	Capacitor-150 MMF.Ceramic (C21).....	
12952	Capacitor-330 MMF.Mica (C1).....	
71919	Capacitor-330 MMF Ceramic (C22).....	
S-3646	Capacitor-.005 Mfd. (C23).....	
70601	Capacitor-.002 Mfd. (C20,C24).	
70615	Capacitor-.05 Mfd. (C15,C26).	
S-3652	Capacitor-.035 Mfd. (C25).....	
S-3648	Capacitor-.01 Mfd. (C5).....	
S-3655	Capacitor-.1 Mfd. (C6,C18)..	
70408	Capacitor-Electrolytic 30-50 Mfd. (C27,C28).	
73164	Condenser-Variable with drum(C2, C11,C3,C12)...	
S-4353	Coil-Antenna coil (L3).....	
S-4351	Coil-Osc.coil "A" band (L8,L9).....	
S-4352	Coil-Osc.coil "C" band (L6,L7).....	
S-4354	Coil-Wave trap coil (L4,L5).....	
73291	Indicator-Station selector pointer..	
S-4370	Loop-Antenna loop (L1,L2).....	
30189	Resistor-120 ohms-1/2 watt (R11)....	
6134	Resistor-1200 ohms-1 watt (R12).....	
30694	Resistor-3900 ohms-1/2 watt (R2)....	
30436	Resistor-12000 ohms-1/2 watt (R13)..	
30685	Resistor-33000 ohms-1/2 watt (R4)...	
14983	Resistor-47000 ohms-1/2 watt (R6)...	
14583	Resistor-220,000 ohms-1/2 watt(R1, R3,R9)....	
30648	Resistor-470,000 ohms-1/2 watt (R10)	
31417	Resistor-3.3 Megohms-1/2 watt (R5).	
30931	Resistor-4.7 Megohms-1/2 watt (R8).	
S-4350	Shaft-Drive Shaft.....	
37605	Socket-Tube Socket.....	
S-3579	Socket-Phono Socket.....	
73285	Switch-Range switch & tone control(S1)	
S-4983	Transformer-1st I.F.(L10,L11,C13, C14).....	
S-4984	Transformer-2nd I.F.(L12,L13,C16, C17,C19)..	
S-4193	Volume Control (R7,S2).....	
	SPEAKER ASSEMBLY	
35849	Dust Cap (Pkg.3).....	
S-3516	Cone-Cone & Voice Coil Assembly(L16)	
S-3580	Speaker-complete.....	
S-4916	Output Transformer(L14,L15).....	
	MISCELLANEOUS ASSEMBLIES	
73299	Baffle-Grille & baffle assembly....	
S-4914	Cabinet-Brown.....	
S-4915	Cabinet-Ivory.....	
S-4313	Cord-Dial cord.....	
72578	Clamp-Dial clamps.....	
S-4367	Cord-Power cord.....	
73300	Foot.....	
73378	Knob.....	
71116	Lamp-Pilot lamp (Mazda #1490).....	
73296	Scale-Dial scale.....	
31418	Spring-Drive cord tension (Pkg.2)..	
14270	Spring-Knob retaining (Pkg.2).....	
71125	Screen-Hand hold screen.....	
71126	Speednut-to hold screen (Pkg.5)....	
33726	Washer-"C" washer for drive shaft (Pkg.5)...	

All prices and parts are subject to change or withdrawal without notice.

MASTER X

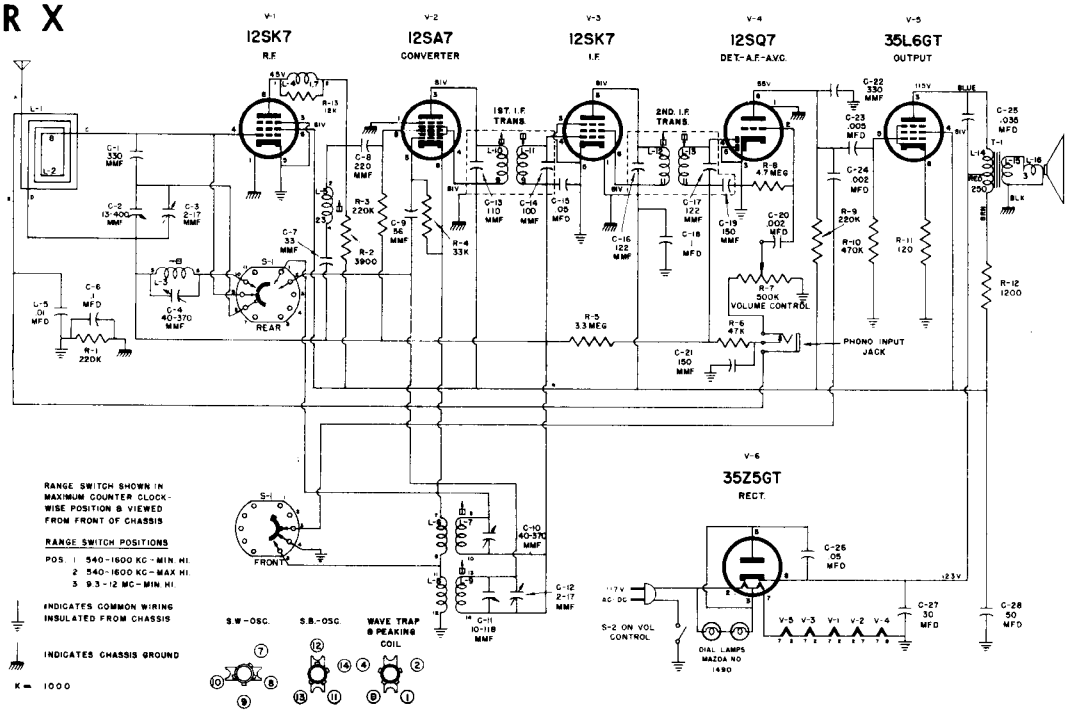

Schematic Diagram

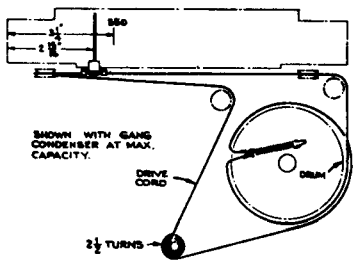

Dial Cord Stringing

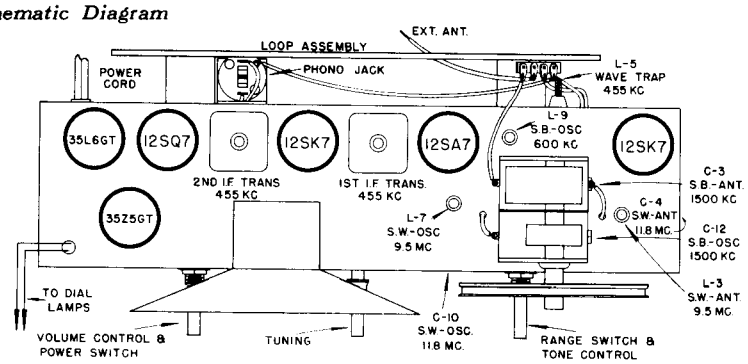

Chassis Layout and Alignment Adjustments

Critical Lead Dress

(Make Lead Dress Before Alignment)

1. Dress all filament and power leads down to chassis and as far as possible from all audio grid and plate wiring.
2. Dress power cord back and away from C-20 (1st audio coupling condenser).
3. Dress C-20 toward 12SQ7 socket and away from the switch.
4. Dress C-25 (output by-pass condenser) down to chassis.
5. Dress green lead from phono jack to volume control in air and away from output transformer.
6. Dress all leads and parts away from oscillator coils.
7. Dress C-8 (R.F. coupling condenser) back to chassis.
8. Dress pilot light leads (above chassis) toward dial support and away from the 35Z5 tube.

ALIGNMENT CHART

Order of Alignment		TEST OSCILLATOR: Connect "HI" Side To	Connect "LO" Side To	Dummy Antenna	Frequency Setting	Range Selector	Receiver Dial Setting	Circuit to Adjust	Adjustment Symbols	Notes
I.F.	1	12SA7 Conv. Grid	Common Gnd.	.1 Mfd.	455 Kc	Position No. 2	Hi. End	1st & 2nd I.F. Trans	L-10 & L-11 L-12 & L-13	Max. Output
Wave Trap	2	Ant Lead	Same	Same	Same	Same	Same	Wave Trap	†L-5	Min. Output
S.B. Alignment	3	Same	Same	100 Mmf	1500 Kc	Same	1500 Kc	Ant & Osc.	C-3 C-12	Max. Output
	4	Same	Same	Same	600 Kc	Same	600 Kc	Osc. Coil	†† L-9	Max. Output
	5	Repeat Steps 3 & 4 until no further improvement is noted.								
S.W. Alignment	6	Ant Lead	Same	50 Mmf	11.8 Mc	Position No. 3	11.8 Mc	Ant & Osc.	C-4 C-10	Max. Output
	7	Same	Same	50 Mmf	9.5 Mc	Same	9.5 Mc	Osc. Coil	L-7	Same
	8	Repeat Steps 6 & 7 until no further improvement is noted.								

† Core Position Closest to Rear Apron is Correct.

†† Core Position Nearest Terminals is Correct.

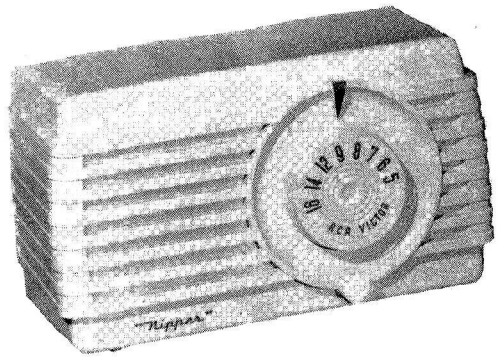

NIPPER II

RCA VICTOR

AC-DC RADIO RECEIVER

NIPPER II
SERVICE DATA
—1951 No. 12—

GENERAL SERVICE DEPARTMENT
RCA VICTOR COMPANY, LTD
MONTREAL, QUE.

Electrical and Mechanical Specifications

FREQUENCY RANGES
Standard Broadcast ("A" Band) ---------- 540-1,600 kc.
INTERMEDIATE FREQUENCY ----------455 kc.

TUBE COMPLEMENT
(1) RCA-12BE6 ----------1st Detector-Oscillator
(2) RCA-12BA6 ----------IF Amplifier
(3) RCA-12AV6 2nd Detector, A.V.C. and A-F Amplifier
(4) RCA-50C5 ----------Output
(5) RCA-35W4 ----------Rectifier

POWER SUPPLY POLARITY—For operation on d-c, the power plug must be inserted in the outlet for correct polarity.

POWER SUPPLY RATINGS (D-C or 25/60 cycles A-C)
105-125 volts ----------30 watts
POWER OUTPUT RATING
Undistorted ----------1.0 watt
Maximum ----------1.5 watts
LOUDSPEAKER
Type ----------4-inch Permanent-Magnet Dynamic
Voice Coil Impedance ----------3.2 ohms at 400 cycles
Tuning Drive Ratio----------Direct Drive

CABINET DIMENSIONS
Width 10"—Height 5⅞"—Depth 4¼".

If the set does not function, reverse the plug. On a-c, reversal of the plug may reduce hum.

REPLACEMENT PARTS LIST FOR NIPPER II

Insist on Genuine Factory Tested Parts, which are readily identified and may be purchased from Authorized Dealers.

STOCK NO.	DESCRIPTION
	CHASSIS ASSEMBLY
S-4523	Capristor-56 MMF & 33 Ohms (C4,R3)
	Capacitor-180 MMF. 20% 300 volts(C3,C14)
	" -390 MMF. 20% 350 volts(C17)
	" -.005 Mfd.20% 400 volts(C18)
	" -.01 Mfd.20% 200 volts(C16)
	" -.01 Mfd.20% 400 volts(C23)
	" --.02 Mfd.10% 600 volts(C20)
	" -.05 Mfd.20% 200 volts(C5)
	" -.05 Mfd.20% 400 volts(C9)
	" -.1 Mfd.10% 400 volts(C8)
S-6289*	" -Electrolytic 30-50 Mfd.(C21, C22)
S-5685	Condenser-Gang Condenser (C1,C2,C6,C7)
S-6280*	Control-Volume Control (R7)
S-5687	Coil-Oscillator Coil (L2)
	Resistor-150 Ohms 10% 1/2 watt(R10,R4)
	" -1200 " 10% 1 watt(R11)
	" -22000 " 20% 1/2 watt(R2)
	" -220000" 20% 1/2 watt(R12)
	" -470000" 20% 1/2 watt(R8,R9)
	" -1 megohm 20% 1/2 watt(R1)
	" -3.3 megohm 20% 1/2 watt(R6)
	" -10 megohm 20% 1/2 watt(R5)
	* Indicates new stock items.

STOCK NO.	DESCRIPTION
	CHASSIS ASSEMBLY (Cont'd.)
S-5682	Transformer-1st I.F.Trans.(C10,C11,L3, L4)
S-5683	" -2nd I.F.Trans.(C12,C13,L5, L6)
S-5686	" -Output Transformer (T1)
	SPEAKER ASSEMBLY
S-5575	Cone-Cone & Voice coil Assy. (L7)
S-4405	Speaker
	MISCELLANEOUS ASSEMBLY
S-6284*	Cabinet-Brown
S-3467	Cord-Power cord
S-5680	Knob-Volume control (On all models (except Ivory & White)
S-6281*	Cover-Back cov.assy.Includes loop antenna
S-6282*	Cover-Back cover only
S-6283*	Loop-Loop antenna only
S-6285*	Knob-Tuning(Used on all models except Ivory & White)
S-6286*	Knob-Tuning Knob (Blk.)Used on Kitchen White
S-6287*	Knob-Volume control knob(BLK)Used on Kitchen White
S-6288*	Knob-Tuning (Ivory)

Only items listed under stock numbers are available as Replacement Parts.

All parts are subject to change or withdrawal without notice.

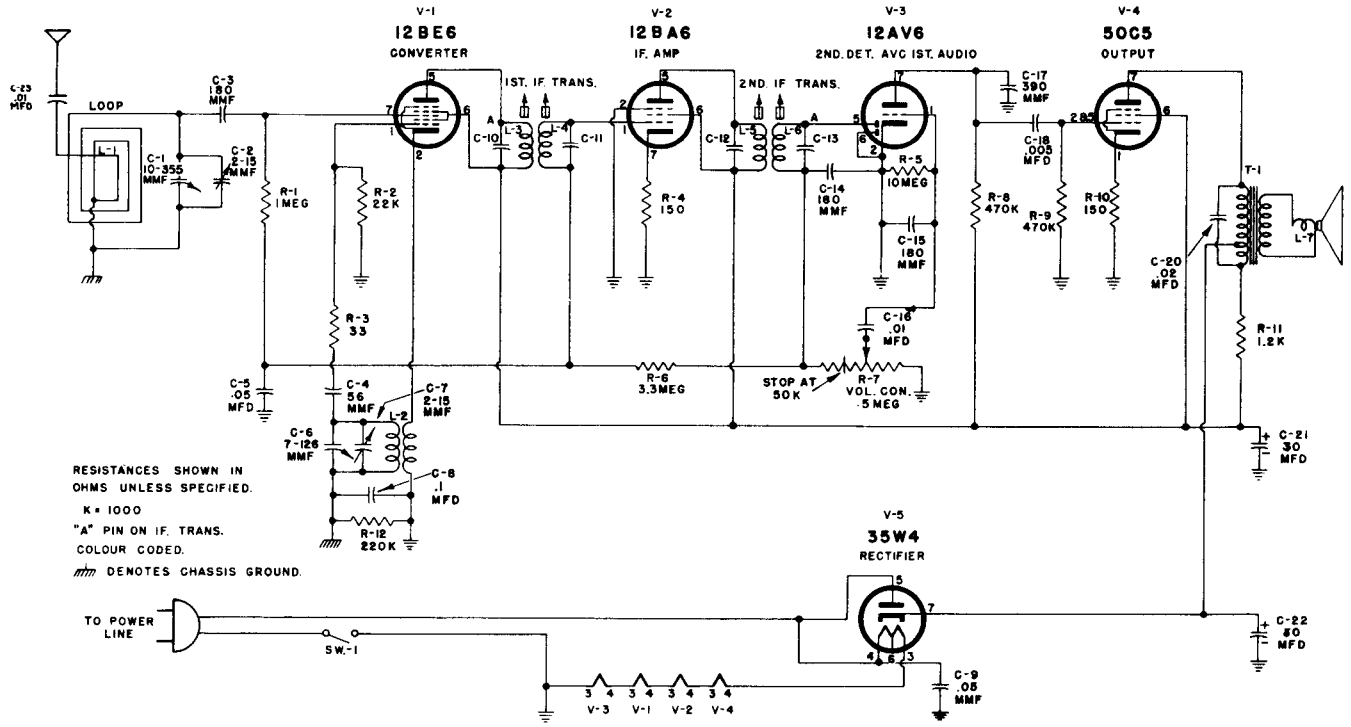

Fig. 1—Schematic Diagram

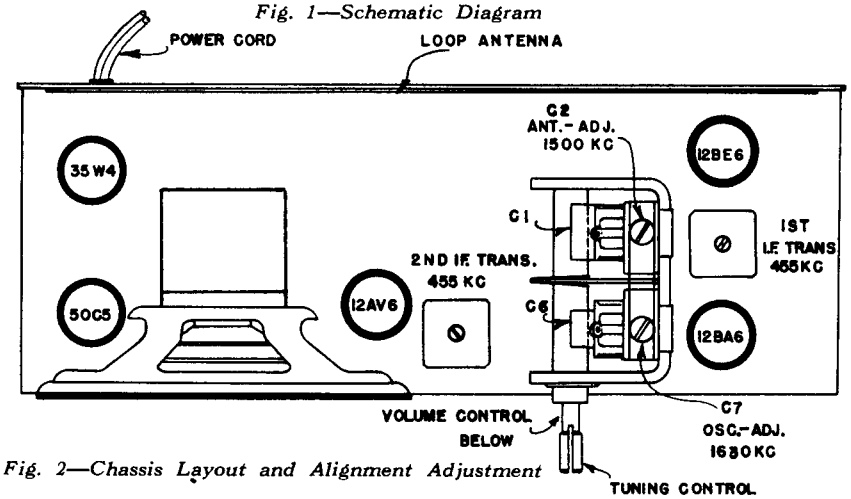

Fig. 2—Chassis Layout and Alignment Adjustment

NOTE: Two types of speakers have been used in this production. The one shown is the replacement for both types. (See Parts List).

Alignment Procedure

Before aligning the receiver, set the gang condenser for maximum capacity and then set the dial knob opposite 55 on left hand end of the dial.

When only a portion of the circuit is to be aligned select the required portion and perform all the remaining steps.

In order to obtain best results, it is advisable to align the 455 KC I.F.'s with the help of a cathode ray ocilloscope. The scope should be connected across the volume control. If this equipment is not available, use the method outlined below in the alignment chart.

NOTE: If the test-ocillator is ac/dc operated, it may be necessary to use an isolation transformer (117 v./117 v. for the receiver during alignment.

Alignment Chart

		TEST OSCILLATOR				RECEIVER				
Order of Alignment		Connect "HI" Side To	Connect "LO" Side To	Dummy Antenna	Frequency Setting	Range Selector	Receiver Dial Setting	Circuit To Adjust	Adjust Adjustment Symbols	Notes
I.F. ALIGNMENT	1	12BA6 Pin #1	Gnd.	.1 Mfd	455 KC		"HI" End	2nd I.F. Trans.	Top & Bottom cores	Max. Out.
	2	12BE6 Pin #7	Same	Same	Same	Same	Same	1st I.F. Trans.	Top & Bottom cores	Same
S.B. ALIGNMENT	3	Radiate signal			1600 KC		1600 KC	Osc.	C-7	Same
	4	Same			1500 KC		1500 KC	Osc.	C-2	Same
	5	Repeat Steps 3 & 4.								

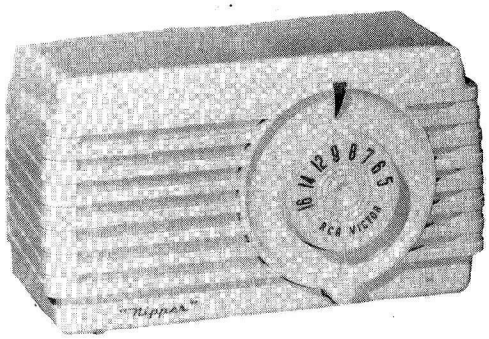

NIPPER II

RCA VICTOR

"HIS MASTER'S VOICE"

AC-DC RADIO RECEIVER

NIPPER II & NIPPER II (Wood) SERVICE DATA

—1952 No. 1—

GENERAL SERVICE DEPARTMENT
RCA VICTOR COMPANY, LTD
MONTREAL, QUE.

Electrical and Mechanical Specifications

FREQUENCY RANGES
Standard Broadcast ("A" Band) ---------- 540-1,600 kc.
INTERMEDIATE FREQUENCY ----------455 kc.

TUBE COMPLEMENT
(1) RCA-12BE6 ----------1st Detector-Oscillator
(2) RCA-12BA6 ----------IF Amplifier
(3) RCA-12AV6 2nd Detector, A.V.C. and A-F Amplifier
(4) RCA-50C5 ----------Output
(5) RCA-35W4 ----------Rectifier

POWER SUPPLY RATINGS (D-C or 25/60 cycles A-C)
105-125 volts ----------30 watts
POWER OUTPUT RATING
Undistorted ----------1.0 watt
Maximum ----------1.5 watts
LOUDSPEAKER
Type ----------4-inch Permanent-Magnet Dynamic
Voice Coil Impedance ----------3.2 ohms at 400 cycles
Tuning Drive Ratio----------Direct Drive

CABINET DIMENSIONS
Width 10"—Height 5⅞"—Depth 4¼"—NIPPER II
Width 10⅛"—Height 7"—Depth 4⅝"—NIPPER II (Wood)

POWER SUPPLY POLARITY—For operation on d-c, the power plug must be inserted in the outlet for correct polarity. If the set does not function, reverse the plug. On a-c, reversal of the plug may reduce hum.

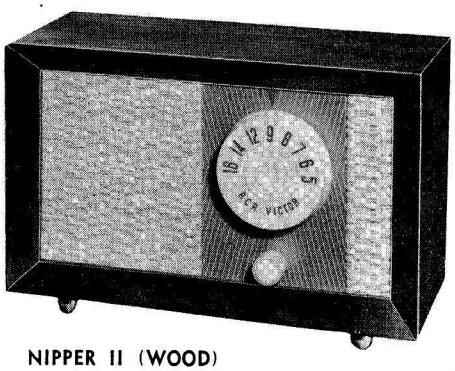

NIPPER II (WOOD)

REPLACEMENT PARTS LIST FOR NIPPER II & NIPPER II (Wood)

Insist on Genuine Factory Tested Parts, which are readily identified and may be purchased from Authorized Dealers.

STOCK NO.	DESCRIPTION
	CHASSIS ASSEMBLY
S-4523	Capristor-56 MMF & 33 Ohms (C4,R3)
	Capacitor-180 MMF. 20% 300 volts(C3,C14)
	" -390 MMF. 20% 350 volts(C17)
	" -.005 Mfd.20% 400 volts(C18)
	" -.01 Mfd.20% 200 volts(C16)
	" -.01 Mfd.20% 400 volts(C23)
	" -.02 Mfd.10% 600 volts(C20)
	" -.05 Mfd.20% 200 volts(C5)
	" -.05 Mfd.20% 400 volts(C9)
	" -.1 Mfd.10% 400 volts(C8)
S-6289*	" -Electrolytic 30-50 Mfd. (C21,C22)
S-5685	Condenser-Gang Condenser (C1,C2,C6,C7)
S-6280*	Control-Volume Control (R7)
S-5687	Coil-Oscillator Coil (L2)
	Resistor-150 Ohms 10% 1/2 watt(R10,R4)
	" -1200 " 10% 1 watt(R11)
	" -22000 " 20% 1/2 watt(R2)
	" -220000" 20% 1/2 watt(R12)
	" -470000" 20% 1/2 watt(R8,R9)
	" -1 megohm 20% 1/2 watt(R1)
	" -3.3 megohm 20% 1/2 watt (R6)
	" -10 megohm 20% 1/2 watt (R5)
S-5682	Transformer-1st I.F.Trans.(C10,C11,L3,L4)
S-5683	" -2nd I.F.Trans.(C12,C13,L5,L6)
S-5686	" -Output Transformer (T1)
	* Indicates new stock items.

STOCK NO.	DESCRIPTION
	SPEAKER ASSEMBLY
S-5575	Cone-Cone & Voice Coil Assy. (L7)
S-4405	Speaker
	MISCELLANEOUS ASSEMBLY
S-6536	Back-Dial Back (Nipper II Wood)
S-6284*	Cabinet-Brown (Nipper II)
S-3467	Cord-Power cord
S-6281*	Cover-Back cov.assy.Includes loop antenna (Nipper II)
S-6335	" -Back cov.assy.Includes loop antenna (Nipper II Wood)
S-6282*	" -Back cover only (Nipper II)
S-6538	" -Back cover only (Nipper II Wood)
75495	Foot-Cabinet foot (Nipper II Wood)
S-6537	Grille Cloth (")
S-6283*	Loop-Loop antenna only
S-6285*	Knob-Tuning(Used on all models except Ivory and White)
S-6286*	Knob-Tuning Knob (Blk.)Used on Kitchen White
S-6287*	Knob-Volume control knob (Blk.) Used on Kitchen White
S-6288*	Knob-Tuning (Ivory)
S-5680	Knob-Volume control (On all models,except Ivory & White)

Only items listed under stock numbers are available as Replacement Parts.

All parts are subject to change or withdrawal without notice.

NIPPER II
NIPPER II (WOOD)

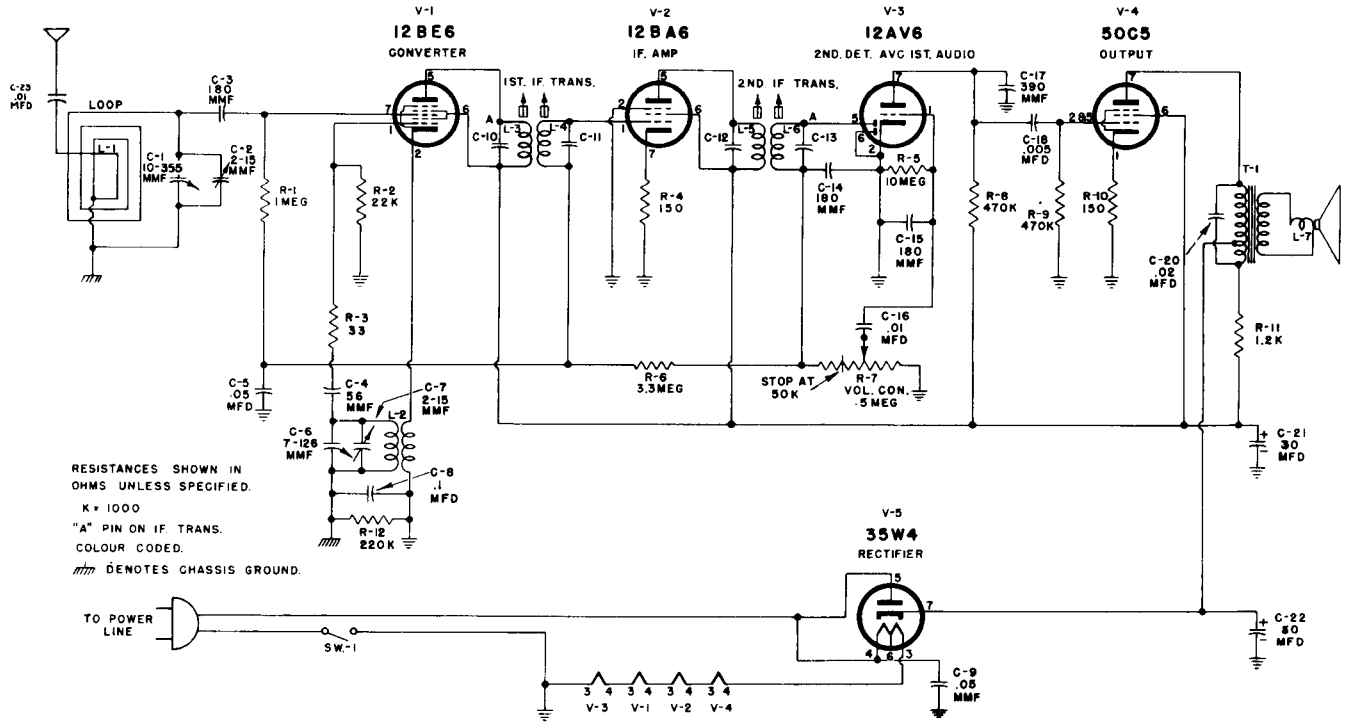

Fig. 1—Schematic Diagram

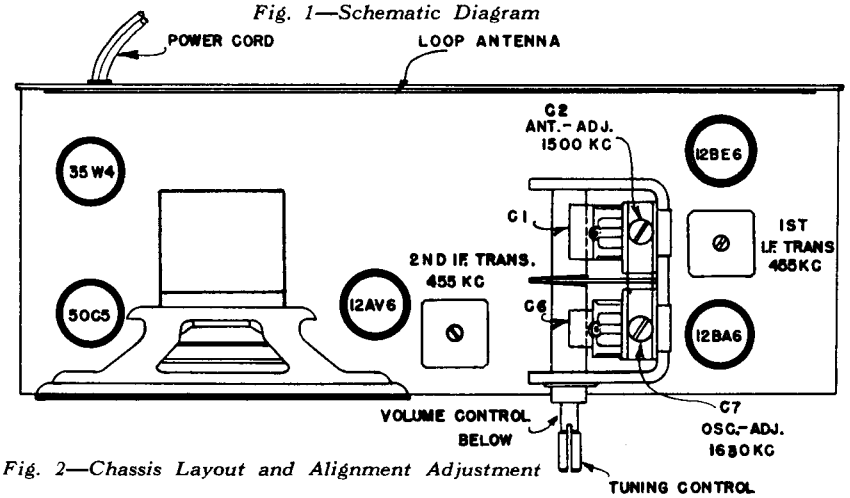

Fig. 2—Chassis Layout and Alignment Adjustment

NOTE: Two types of speakers have been used in this production. The one shown is the replacement for both types. (See Parts List).

Alignment Procedure

Before aligning the receiver, set the gang condenser for maximum capacity and then set the dial knob opposite 55 on left hand end of the dial.

When only a portion of the circuit is to be aligned select the required portion and perform all the remaining steps.

In order to obtain best results, it is advisable to align the 455 KC I.F.'s with the help of a cathode ray ocilloscope. The scope should be connected across the volume control. If this equipment is not available, use the method outlined below in the alignment chart.

NOTE: If the test-ocillator is ac/dc operated, it may be necessary to use an isolation transformer (117 v./117 v. for the receiver during alignment.

Alignment Chart

		TEST OSCILLATOR				RECEIVER				
Order of Alignment		Connect "HI" Side To	Connect "LO" Side To	Dummy Antenna	Frequency Setting	Range Selector	Receiver Dial Setting	Circuit To Adjust	Adjust Adjustment Symbols	Notes
I.F. ALIGN-MENT	1	12BA6 Pin #1	Gnd.	.1 Mfd	455 KC		"HI" End	2nd I.F. Trans.	Top & Bottom cores	Max. Out.
	2	12BE6 Pin #7	Same	Same	Same	Same	Same	1st I.F. Trans.	Top & Bottom cores	Same
S.B. ALIGN-MENT	3	Radiate signal			1600 KC		1600 KC	Osc.	C-7	Same
	4	Same			1500 KC		1500 KC	Osc.	C-2	Same
	5	Repeat Steps 3 & 4.								

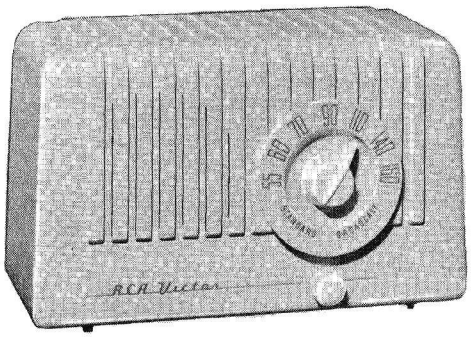

NIPPER

RCA VICTOR

"HIS MASTER'S VOICE"

AC-DC RADIO RECEIVER

NIPPER

SERVICE DATA

—1950 No. 11—

GENERAL SERVICE DIVISION
RCA VICTOR COMPANY LIMITED
MONTREAL, QUE.

Electrical and Mechanical Specifications

FREQUENCY RANGES
Standard Broadcast ("A" Band) --------- 540-1,600 kc.
INTERMEDIATE FREQUENCY ----------455 kc.

TUBE COMPLEMENT
(1) RCA-12BE6 ----------1st Detector-Oscillator
(2) RCA-12BA6 ----------IF Amplifier
(3) RCA-12AV6 2nd Detector, A.V.C. and A-F Amplifier
(4) RCA-50C5 ----------Output
(5) RCA-35W4 ----------Rectifier

POWER SUPPLY POLARITY—For operation on d-c, the power plug must be inserted in the outlet for correct polarity.

POWER SUPPLY RATINGS (D-C or 25/60 cycles A-C)
105-125 volts ----------30 watts
POWER OUTPUT RATING
Undistorted ----------1.0 watt
Maximum ----------1.5 watts
LOUDSPEAKER
Type ----------5-inch Permanent-Magnet Dynamic
Voice Coil Impedance ----------3.2 ohms at 400 cycles
Tuning Drive Ratio----------Direct Drive

CABINET DIMENSIONS
Width 11⅜"—Height 6 15/16"—Depth 6¼"

If the set does not function, reverse the plug. On a-c, reversal of the plug may reduce hum.

REPLACEMENT PARTS FOR NIPPER

Insist on Genuine Factory Tested Parts, which are readily identified and may be purchased from Authorized Dealers.

STOCK NO.	DESCRIPTION
	Chassis Assembly
73867	Capristor-56 MMF & 33 Ohms (C4,R3)
	Capacitor-180 MMF. 20% 300 Volts (C3, C14)
	" -390 MMF. 20% 350 Volts(C17)
	" -.005 MFD.20% 400 Volts(C18)
	" -.01 MFD. 20% 200 Volts(C16)
	" -.02 MFD. 10% 600 Volts(C20)
	" -.05 MFD. 20% 200 Volts(C5)
	" -.05 MFD. 20% 400 Volts (C9)
	" -.1 MFD. 10% 400 Volts(C8)
S-5688*	" -Electrolytic 30-50 MFD. (C21,C22)
S-5685*	Condenser-Gang Condenser(C1,C2,C6,C7)
S-5684*	Control-Volume Control (R7)
S-5687*	Coil-Oscillator Coil (L2)
	Resistor-100 Ohms 20% 1/2 watt
	Resistor-150 Ohms 20% 1/2 watt (R4) (2nd production)
	Resistor-150 Ohms 10% 1/2 watt (R10)
	Resistor-1200 Ohms 10% 1 watt (R11)
	Resistor-22000 Ohms 20% 1/2 watt(R2)
	Resistor-220000 Ohms 20% 1/2 watt(R12)
	Resistor-470000 Ohms 20% 1/2 watt(R8, R9)
	Resistor-1 megohm 20% 1/2 watt (R1)
	Resistor-3.3 megohm 20% 1/2 watt(R6)
	Resistor-10 megohm 20% 1/2 watt (R5)
	* Indicates new stock items.

STOCK NO.	DESCRIPTION
	Chassis Assembly (Cont'd.)
S-5682*	Transformer-1st I.F.Trans.(C10,C11,L3, L4)
S-5683*	Transformer-2nd I.F.Trans.(C12,C13, L5,L6)
S-5686*	Transformer-Output Transformer (T1)
	Speaker Assembly
S-5575*	Cone-Cone & voice coil assy. (L7)
S-5828*	Speaker
	Miscellaneous Assemblies
S-5674*	Cabinet-Brown
S-5675*	Cabinet-Ivory
S-5676*	Cabinet-Green
S-5677*	Cabinet-Rose
S-5678*	Cabinet-White
S-5817*	Cabinet-Blue
S-5818*	Cabinet-Tera-Cota
S-5819*	Cabinet-Yellow
S-5681*	Cover-Back cover assy. includes loop antenna
S-5679*	Knob-Tuning (Ivory)
S-5680*	Knob-Volume control (Ivory)
S-5826*	Loop-Loop Antenna only
S-5827*	Cover-Back cover only

(When ordering parts please indicate Nipper, 1950 Model)

Only items listed under stock numbers are available as Replacement Parts.

All parts are subject to change or withdrawal without notice.

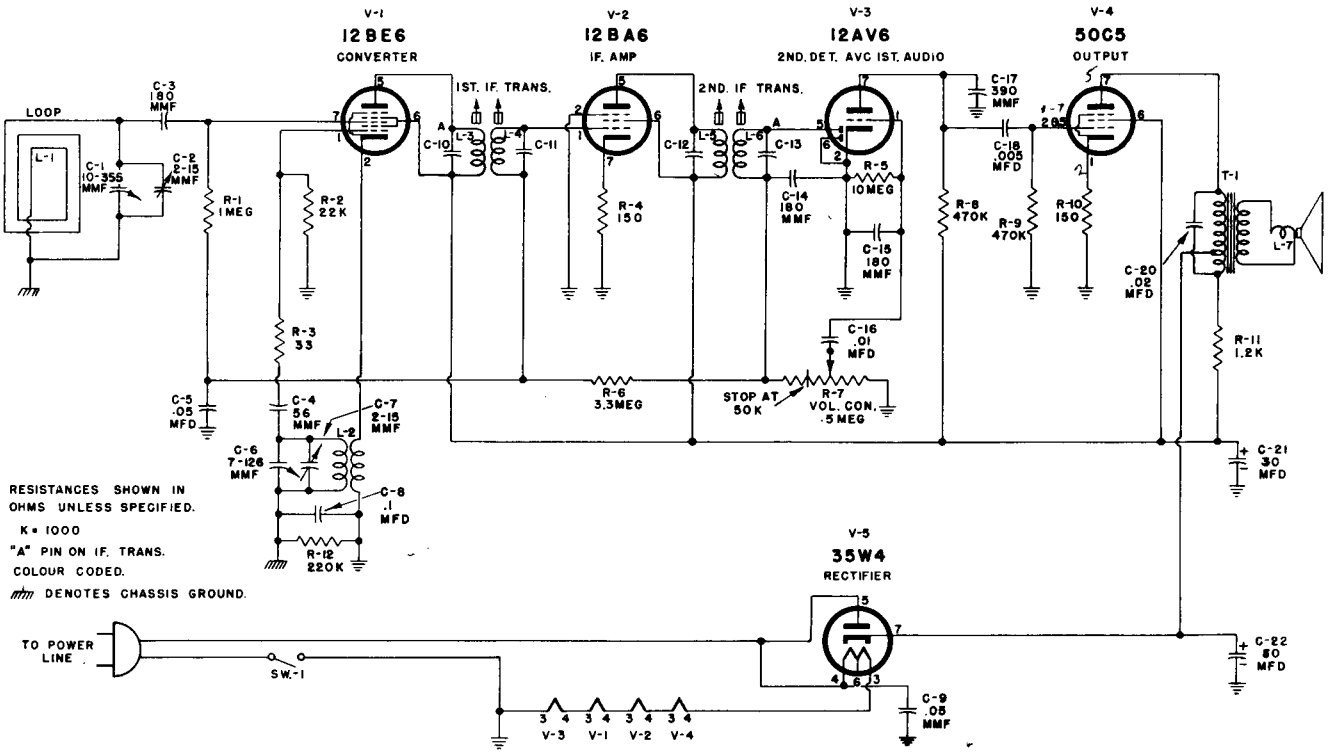

Fig. 1—Schematic Diagram

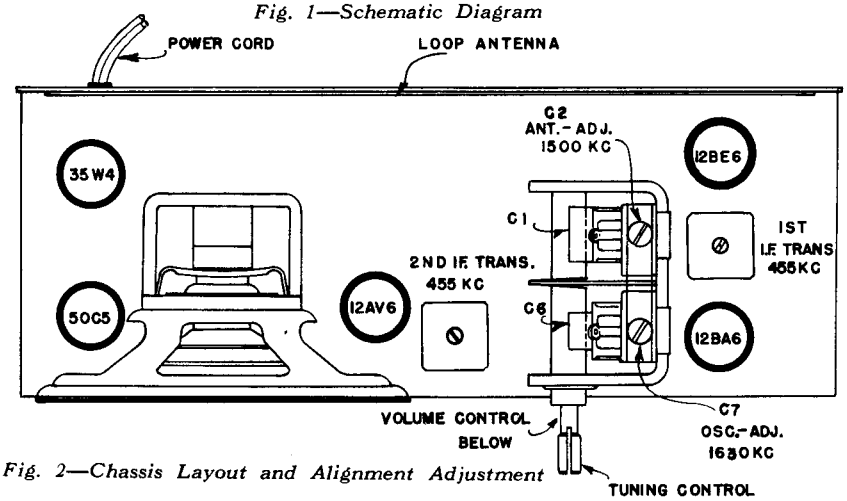

Fig. 2—Chassis Layout and Alignment Adjustment

Alignment Procedure

Before aligning the receiver, set the gang condenser for maximum capacity and then set the dial knob opposite 55 on left hand end of the dial.

When only a portion of the circuit is to be aligned select the required portion and perform all the remaining steps.

In order to obtain best results, it is advisable to align the 455 KC I.F.'s with the help of a cathode ray ocilloscope. The scope should be connected across the volume control. If this equipment is not available, use the method outlined below in the alignment chart.

NOTE: If the test-ocillator is ac/dc operated, it may be necessary to use an isolation transformer (117 v./117 v. for the receiver during alignment.

Alignment Chart

		TEST OSCILLATOR				RECEIVER				
Order of Alignment		Connect "HI" Side To	Connect "LO" Side To	Dummy Antenna	Frequency Setting	Range Selector	Receiver Dial Setting	Circuit To Adjust	Adjust Adjustment Symbols	Notes
I.F. ALIGNMENT	1	12BA6 Pin #1	Gnd.	.1 Mfd	455 KC		"HI" End	2nd I.F. Trans.	Top & Bottom cores	Max. Out.
	2	12BE6 Pin #7	Same	Same	Same	Same	Same	1st I.F. Trans.	Top & Bottom cores	Same
S.B. ALIGNMENT	3	Radiate signal			1600 KC		1600 KC	Osc.	C-7	Same
	4	Same			1500 KC		1500 KC	Osc.	C-2	Same
	5	Repeat Steps 3 & 4.								



"HIS MASTER'S VOICE"